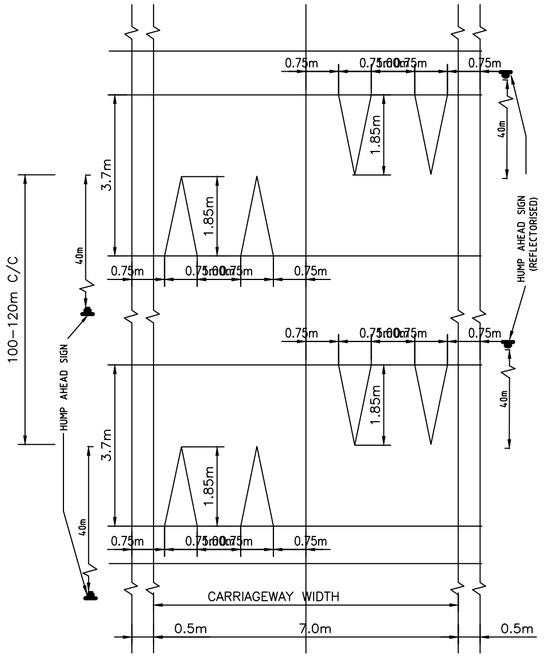

BM-04 TYPICAL DETAIL FOR SPEED BREAKER
(SCALE 1:100)

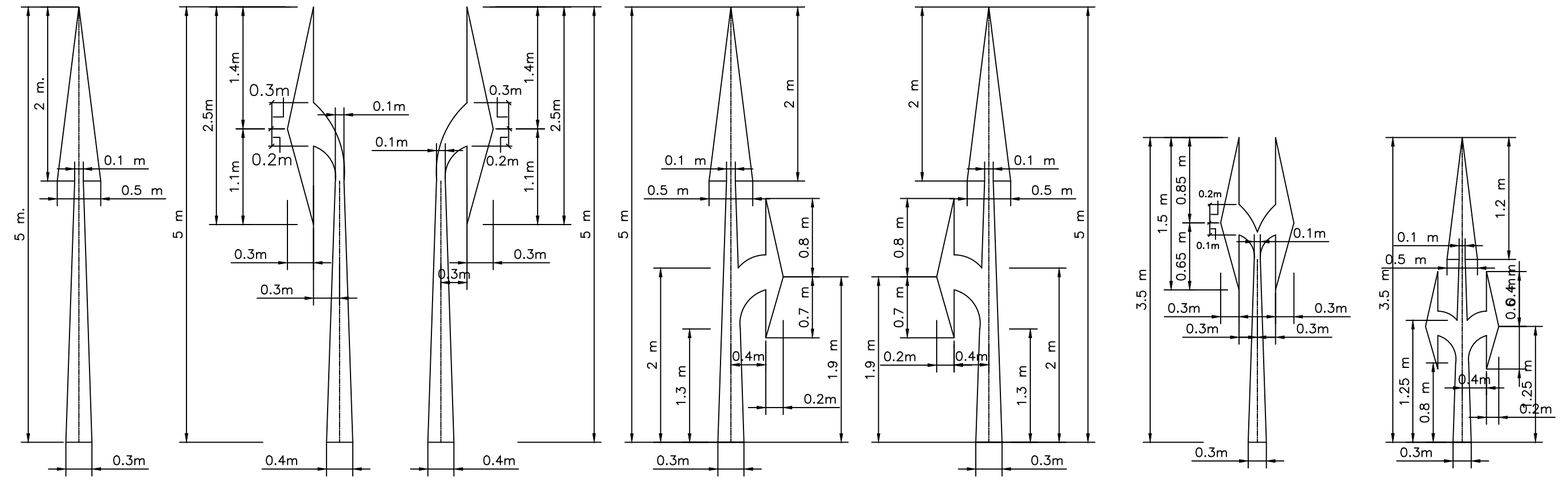

ARROW MARKING FOR ROUTE DIRECTION

TOTAL LENGTH OF MARKING (M)	SPACING BETWEEN BARS OR CHEVRONS (MM)	
	LOW SPEED (75 KM/H)	HIGH SPEED (75 KM/H)
< 5.7	2100	--
5.7 to 22.5	3500	--
>22.5	5000	--
< 10.5	--	4000
> 10.5	--	6000

KERB MARKINGS
(SCALE 1:20)

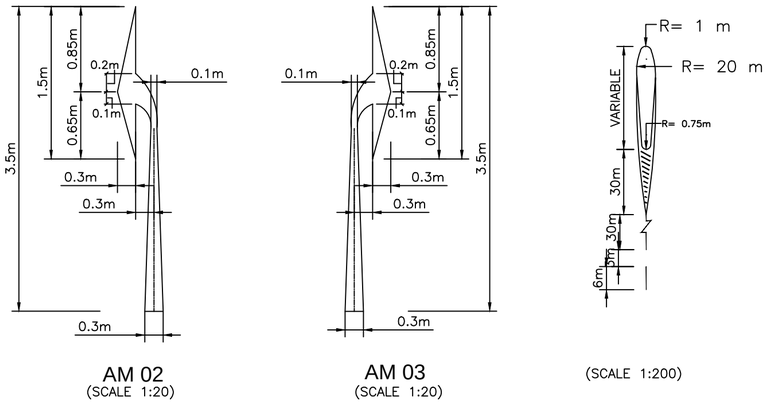

DIAGONAL MARKING IN
ADVANCE OF DIRECTIONAL ISLAND

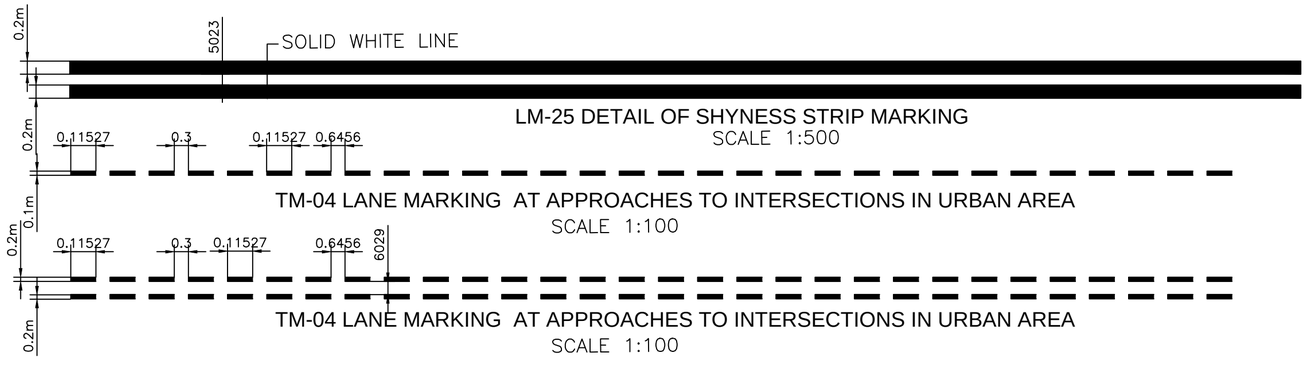

LM-25 DETAIL OF SHYNESS STRIP MARKING
SCALE 1:500

TM-04 LANE MARKING AT APPROACHES TO INTERSECTIONS IN URBAN AREA
SCALE 1:100

TM-04 LANE MARKING AT APPROACHES TO INTERSECTIONS IN URBAN AREA
SCALE 1:100

Notes:

1. All the arrows are in white colour.
2. Provided first arrow at distance of 15m from mouth of intersection & second at 30m from first arrow.
3. Size of arrow shall be 3.5m (As per fig.21 of IRC:35-2015) for design speed is less than 50km/hr.

CLIENT :	PROJECT :	DESIGN CONSULTANT:	Detailed Project Report	DESIGNED BY	DRAWN BY	CHECKED BY	APPROVED BY	TITLE :
NATIONAL HIGHWAYS AND INFRASTRUCTURE DEVELOPMENT CORPORATION LTD. (MINISTRY OF ROAD TRANSPORT AND HIGHWAYS) GOVERNMENT OF INDIA	CONSULTANCY SERVICES FOR PREPARATION OF DETAILED PROJECT REPORT FOR DEVELOPMENT OF ECONOMIC CORRIDORS, INTER CORRIDORS AND FEEDER ROUTES TO IMPROVE THE EFFICIENCY OF FREIGHT MOVEMENTS IN INDIA UNDER BHARATMALA PARIYOJANA (LOT-1:PACKAGE IV)	VOYANTS SOLUTIONS PVT LTD. 403, 4th Floor, Park Centra, Sector-30, NH-8 Gurugram-122001, Haryana, India CIN- U74140HR2004PTC046918 Ph: 0124-4598200, Fax: 0124-4019051, E-mail: info@voyants.in, www.voyants.in	REV. DATE DESCRIPTION	PD/PS	SS/SP	DGR	SKC	Road / Kerb Marking
				SCALE : N.T.S		SHEET SIZE	A2	DRG. No. : VSPL/1718-082/DPR/PKG-4/MIS- 02 (Sheet 04 of 04)
								REVISION:R1 MARCH 2022

PATH: C:\Users\Urbw2\Desktop\7.Miscellaneous Drawings_Two Lane\MIS_02_Road_Marking.dwg

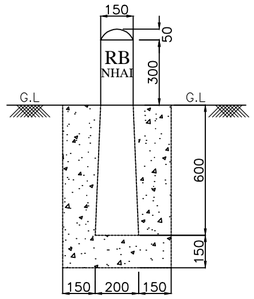

ELEVATION

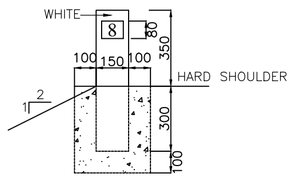

FRONT ELEVATION

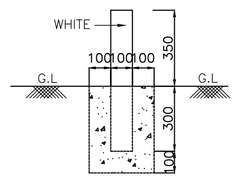

SIDE ELEVATION

SECTIONAL PLAN

BOUNDARY STONE

SCALE–1:20

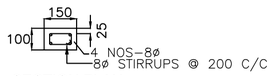

SECTION PLAN

HECTOMETRE STONE

SCALE–1:20

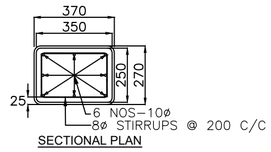

SECTIONAL PLAN

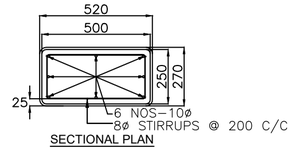

SECTIONAL PLAN

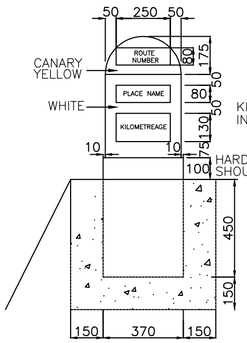

FACE-I & II ELEVATION

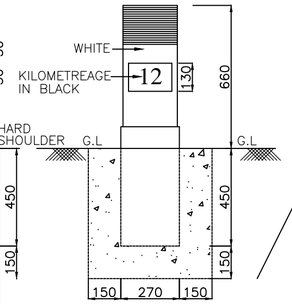

SIDE ELEVATION

KILOMETRE STONE

SCALE–1:20

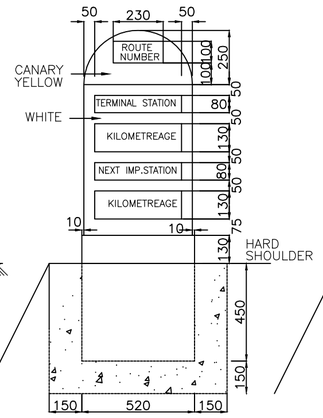

FACE-I ELEVATION

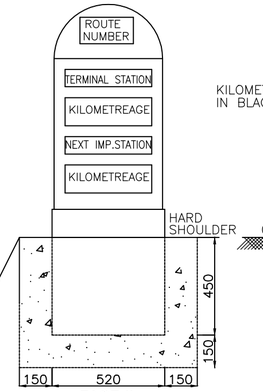

FACE-II

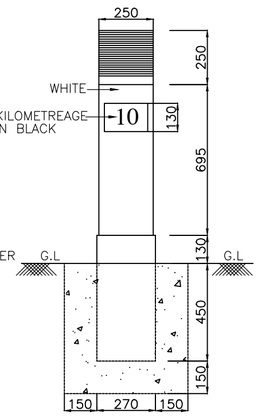

SIDE ELEVATION

FIFTH KILOMETRE STONE

SCALE–1:20

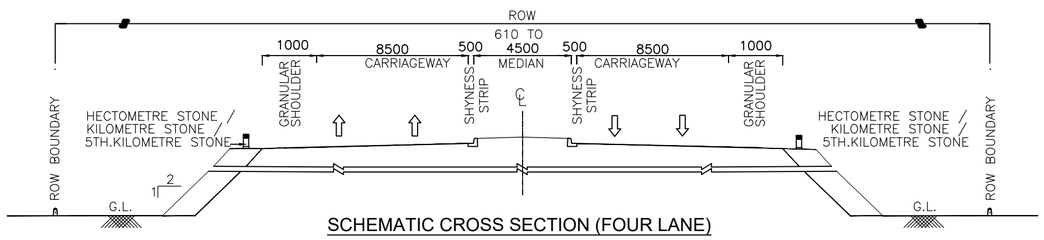

SCHEMATIC CROSS SECTION (FOUR LANE)

SCALE–1:200

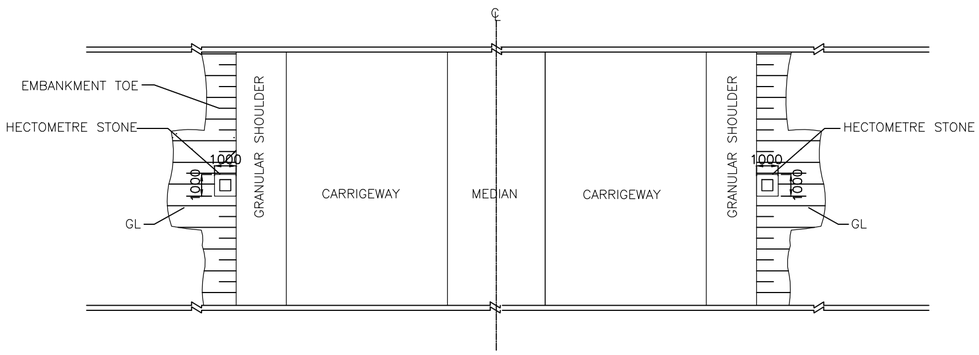

LOCATION OF HECTOMETRE STONE

SCALE–NONE

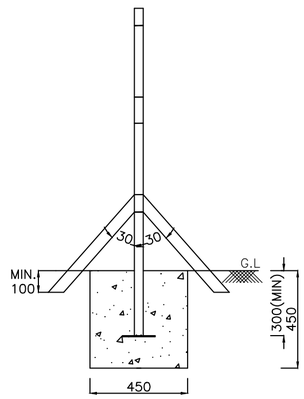

DETAIL - A (AT OPENING)

SCALE–1:20

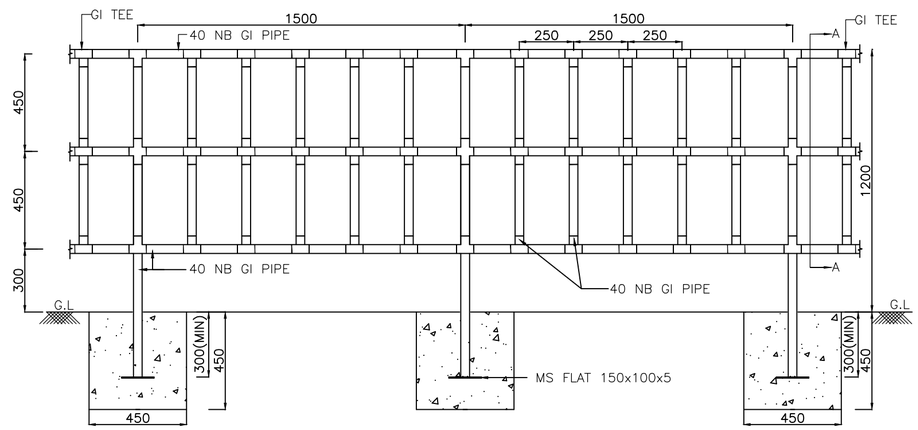

TYPICAL PEDESTRIAN GUARD RAILING

SCALE–1:200

Notes:

1. Details of kilometre stone and 5th kilometre stone are generally based on IRC:8–1980
2. Details of 200m stones are generally based on IRC:26–1967.
3. The distance stones shall be provided on left side of the road as shown independently for each direction of traffic flow.
4. The letters and numerals on distance stones shall be as per IRC:8–1980.
5. Details of boundary stones are generally based on IRC:25–1967.
6. Besides the above, standards and specifications mentioned in IRC : SP : 84–2014 shall be followed strictly whenever applicable.
7. All dimensions are in millimetres unless otherwise mentioned.

PATH: C:\Shompa\0-Project\1718082_Bharatmala_Assam_P-4\2-October_2022\New folder\Assam P4 SS\7-Misc\MIS_03_Distance_Stone.dwg

CLIENT :	PROJECT :	DESIGN CONSULTANT:	Detailed Project Report	DESIGNED BY	DRAWN BY	CHECKED BY	APPROVED BY	TITLE :
NATIONAL HIGHWAYS AND INFRASTRUCTURE DEVELOPMENT CORPORATION LTD. (MINISTRY OF ROAD TRANSPORT AND HIGHWAYS) GOVERNMENT OF INDIA	CONSULTANCY SERVICES FOR PREPARATION OF DETAILED PROJECT REPORT FOR DEVELOPMENT OF ECONOMIC CORRIDORS, INTER CORRIDORS AND FEEDER ROUTES TO IMPROVE THE EFFICIENCY OF FREIGHT MOVEMENTS IN INDIA UNDER BHARATMALA PARIYOJANA (LOT-1:PACKAGE IV)	VOYANTS SOLUTIONS PVT LTD. 403, 4th Floor, Park Centra, Sector-30, NH-8 Gurugram-122001, Haryana, India CIN- U74140HR2004PTC046918 Ph: 0124-4598200, Fax: 0124-4019051, E-mail: info@voyants.in, www.voyants.in		PD/PS	SS/SP	DGR	SKC	Typical Deatils of Distance Stone, Boundary Stone & Guard Post
				SCALE : N.T.S		SHEET SIZE A2		DRG. No. : VSPL/1718-082/DPR/PKG-4/MIS- 03
			REV. DATE DESCRIPTION					REVISION:R0 OCTOBER 2022

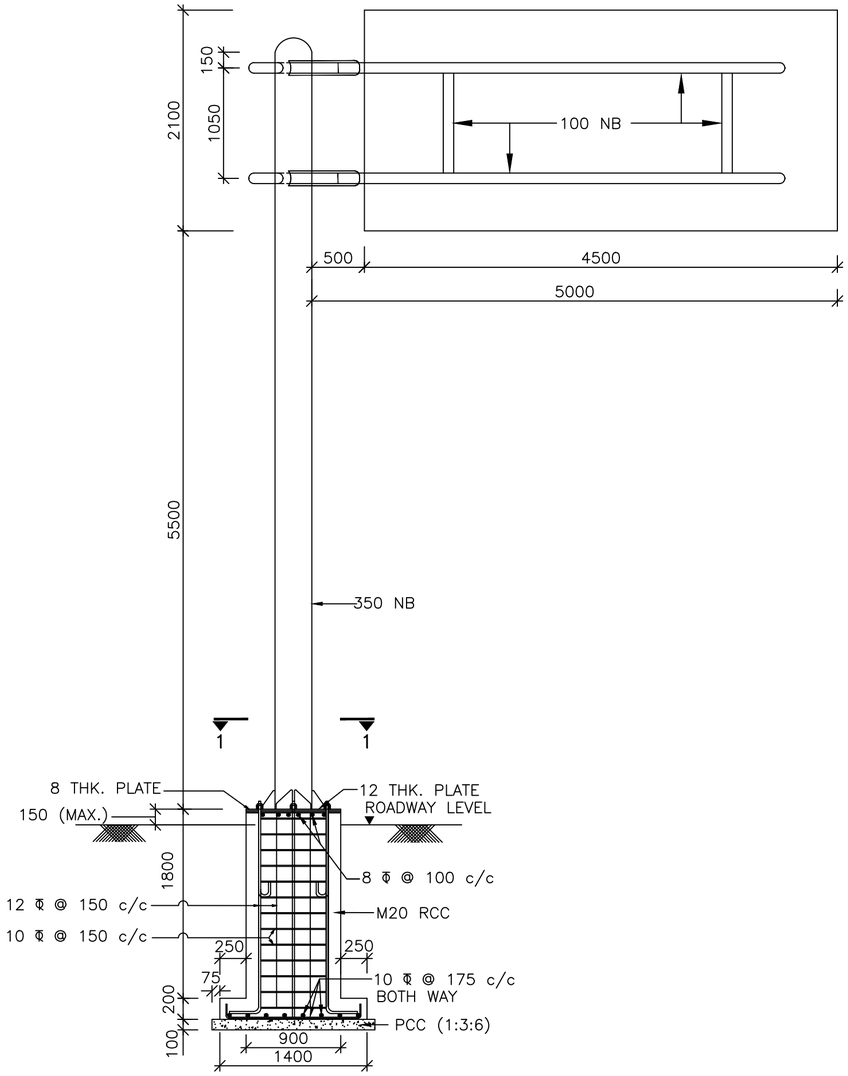

DETAILS FOR CANTILEVER TYPE OVERHEAD SIGN

SCALE–1:50

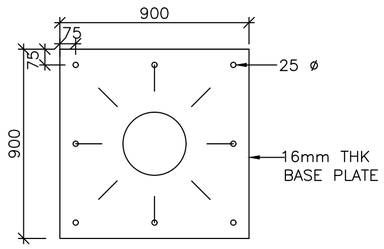

SECTION 1-1

SCALE–1:25

SIGN	MARK	SHAPE	COLOUR			DIMENSION
			BORDER	BACKGROUND	SYMBOL	
WARNING	WS	EQUILATEROL TRIONGLE WITH APEX POIMTING UPWARDS	RED REFLECTIVE	WHITE REFLECTIVE	BLACK	SIDE =900MM CORNER=900MM RADIUS BORDER=70MM
MANDATORY/ REGULATORY	MS	GENARALLY CIRCULAR BUT FOR STOP SIGN OCTOGONAL AND TRIANGULAR FOR GIVE WAY SIGN	RED REFLECTIVE	WHITE REFLECTIVE	ARROWS : BLACK BAND : RED	DIA =600MM BORDER =65MM BEND =60MM OCTAGON SIDE =370MM BORDER =30MM BORDER =30MM TRIANGULAR SIDE =900MM BORDER =900MM
INFORMATORY	IS	RECTANGULAR WITH LONGER SIDE VERTICAL	BLUE REFLECTIVE	WHITE REFLECTIVE	BLACK OR RED REFLECTIVE SQUARE IN WHITE	OVERALL = 800X600 CENTRAL SQUARE = 400X400
DIRECTION	DS	RECTANGULAR WITH LONGER SIDE HORIZONTAL	BACK REFLECTIVE	WHITE REFLECTIVE	BLACK	VARIES BORDER = 50MM

	KERBED ROAD	UN–KERBED ROADS
MINIMUM CLEARANCE (C)	>6 cm	2–3 METRE
BOTTOM EDGE OF SIGN HEIGHT (H) SHOULD BE	>2m ABOVE KERB	>1.5m ABOVE CROWN OF THE PAVEMENT

CLIENT :

NATIONAL HIGHWAYS AND INFRASTRUCTURE DEVELOPMENT CORPORATION LTD.
(MINISTRY OF ROAD TRANSPORT AND HIGHWAYS)
GOVERNMENT OF INDIA

PROJECT :

CONSULTANCY SERVICES FOR PREPARATION OF DETAILED PROJECT REPORT FOR DEVELOPMENT OF ECONOMIC CORRIDORS, INTER CORRIDORS AND FEEDER ROUTES TO IMPROVE THE EFFICIENCY OF FREIGHT MOVEMENTS IN INDIA UNDER BHARATMALA PARIYOJANA (LOT-1:PACKAGE IV)

DESIGN CONSULTANT:

VOYANTS SOLUTIONS PVT LTD.
403, 4th Floor, Park Centra,
Sector-30, NH-8
Gurugram-122001, Haryana, India
CIN- U74140HR2004PTC046918
Ph: 0124-4598200, Fax: 0124-4019051,
E-mail: info@voyants.in, www.voyants.in

Detailed Project Report

REV.	DATE	DESCRIPTION

DESIGNED BY	DRAWN BY	CHECKED BY	APPROVED BY
PD/PS	SS/SP	DGR	SKC
SCALE :	N.T.S	SHEET SIZE	A2

TITLE :

Typical Details of Overhead Sign

DRG. No. : VSPL/1718-082/DPR/PKG-4/MIS- 04 (Sheet 01 of 02)

REVISION:R0 OCTOBER 2022

PATH: C:\Shampa\0.Project\1718082_Bharatmala_Assam_P-4\2.October_2022\New folder\Assam P4 SS\7.Misc\MIS_04_Over_Head_Sign.dwg

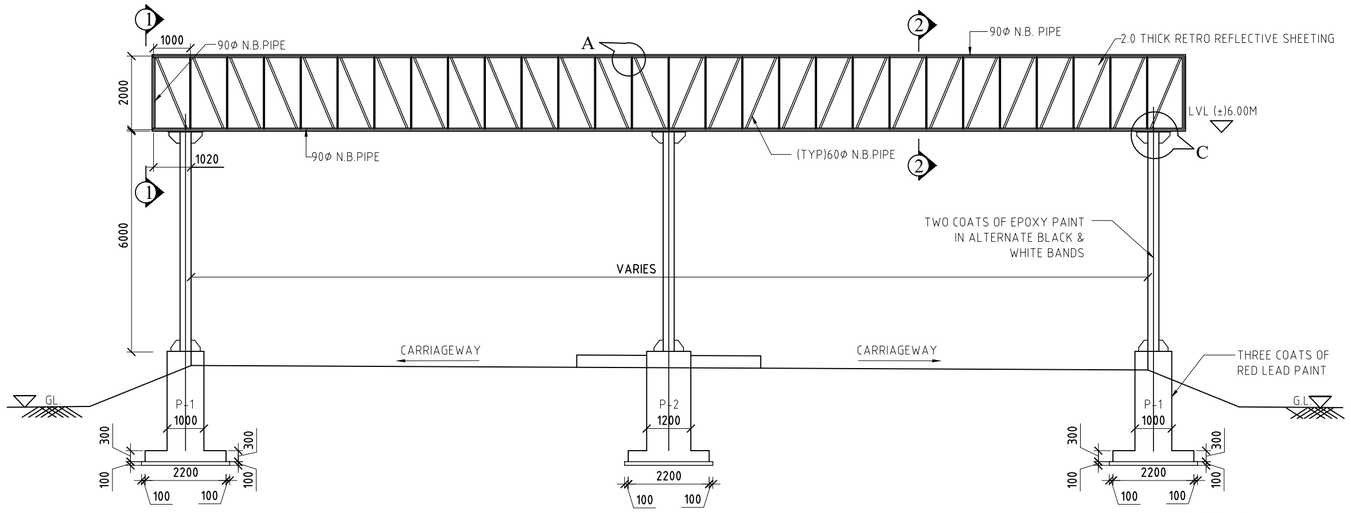

ELEVATION

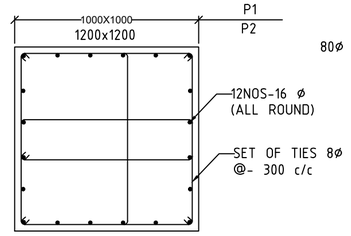

SECTION 4-4

SCALE:– 1 : 25

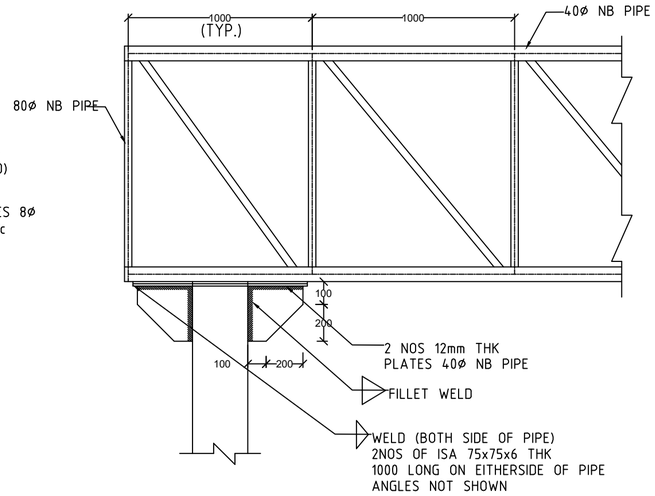

SECTION 2-2

SCALE:– 1 : 25

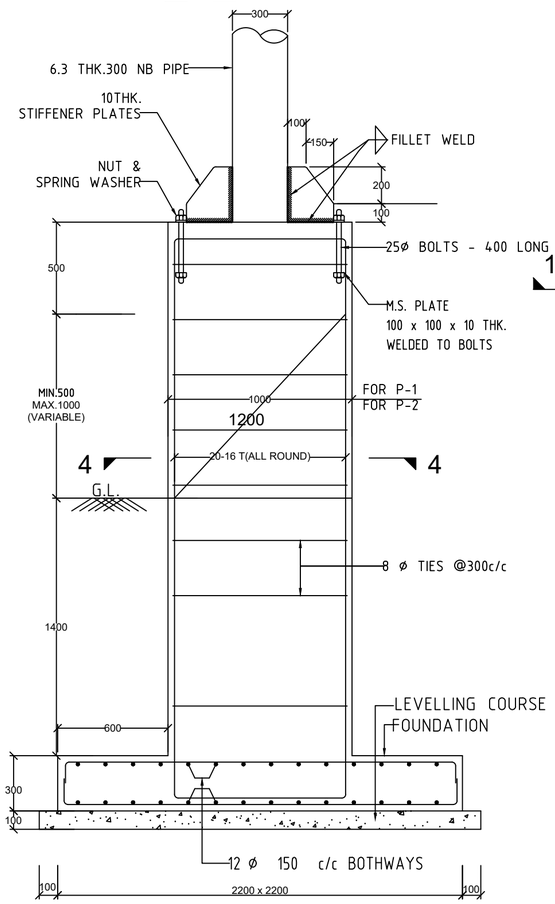

SECTION 1-1

SCALE:– 1 : 25

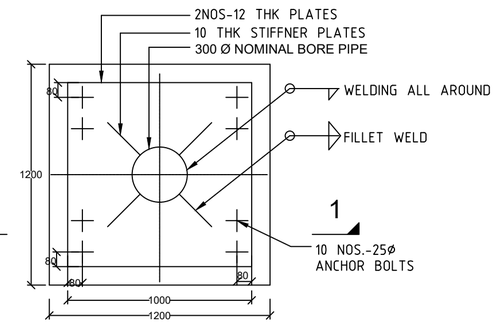

DETAILS OF COLUMN BASE P-2

SCALE:– 1 : 25

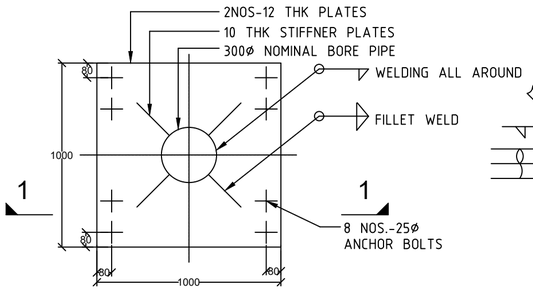

DETAILS OF COLUMN BASE P-1

SCALE:– 1 : 25

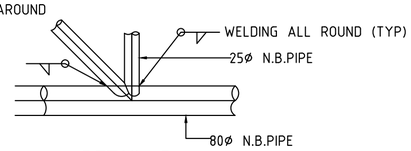

DETAIL - B

SCALE:– 1 : 12.5

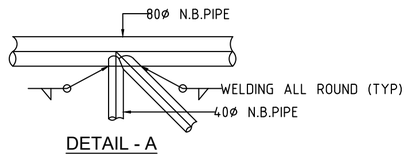

DETAIL - A

SCALE:– 1 : 12.5

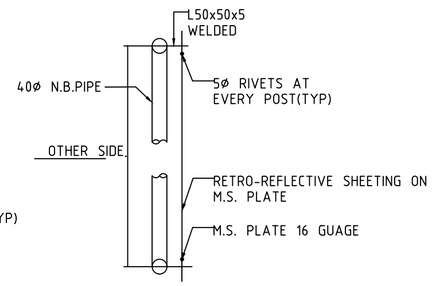

SECTION 3-3

(SIMILAR ARRANGEMENT SHALL BE ON THE OTHER SIDE)

SCALE:– 1 : 25

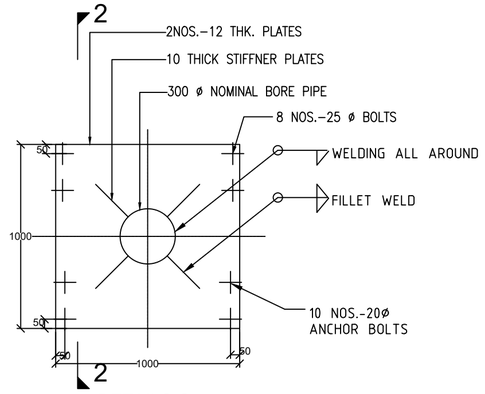

DETAILS C

SCALE:– 1 : 25

NOTES :

1. ALL DIMENSIONS ARE IN mm, UNLESS OTHERWISE MENTIONED.
2. ONLY WRITTEN DIMENSIONS ARE TO BE FOLLOWED, AND NO DIMENSIONS SHALL BE SCALED.
3. SAFE BEARING CAPACITY HAS BEEN TAKEN AS 10 Mt/Sqm.
4. THE CONCRETE GRADE SHALL BE M-20 IN FOUNDATION AND M-15 IN LEVELING COURSE
5. CLEAR COVER TO THE OUTER MOST STEEL SHALL BE
   i) PEDESTAL - 40mm
   ii) FOUNDATION - 50mm
6. STEEL TUBES ARE DESIGNATED BY THEIR NOMINAL BORES INDICATED ON DRAWING.
7. STEEL TUBES USED ARE CLASSIFIED MEDIUM TYPE STEEL TUBES.
8. STEEL TUBES SHALL CONFORM TO GRADE Ys† 210.
9. STEEL TUBES USED SHALL BE CONFORMING TO IS:1161-1998.
10. TUBULAR MEMBERS SHALL HAVE ANNULAR CUT HEAD SMOOTH FINISHED SO AS TO HAVE PROPER SEAT OVER THE SUPPORTING TUBE.
11. ELECTRODE USED SHALL CONFORM TO RELEVENT I.S. SPECIFICATIONS AND THE CHEMICAL COMPOSITION OF ELECTRODE & THE TUBE SHOULD MATCH.
12. SLAG SHALL BE REMOVED BEFORE MEASURING THE DIMENSIONS OF FILLET WELD.
13. WELDING SHALL BE DONE BY ARC WELDING.
14. 4.5mm SIZE WELD SHALL BE MADE WITH A SINGLE PASS.
15. WELD SIZE SHALL BE 4.5mm UNLESS OTHERWISE MENTIONED AND SHALL BE DONE ALL ROUND ON THE CONTACT LENGTH OF MEMBERS.
16. HIGH STRENGTH BOLTS SHALL CONFORM TO IS:4000-1992.
17. DIA. OF HOLES IN MS PLATES SHALL BE MACHINE MADE & AS FOLLOWS

DIA OF BOLTS	DIA OF HOLES.
i) 20mm.	21.5mm.
ii) 25mm.	26.5mm.

18. SIZE OF LETTERS AND COLOUR OF PAINT SHALL BE DECIDED BY THE ENGINEER.
    i) IRC : 67-2001
    ii) IRC : 30-1968
19. SHADE OF ANTICORROSIVE PAINT FOR PIPES SHALL BE DECIDED BY THE ENGINEER.
20. RETRO-REFLECTIVE SHEETING SHALL BE BOLTED WITH 40 MM ø PIPE WITH 20 MM HIGH STRENGTH BOLT.

CLIENT :

NATIONAL HIGHWAYS AND INFRASTRUCTURE DEVELOPMENT CORPORATION LTD.
(MINISTRY OF ROAD TRANSPORT AND HIGHWAYS)
GOVERNMENT OF INDIA

PROJECT :

CONSULTANCY SERVICES FOR PREPARATION OF DETAILED PROJECT REPORT FOR DEVELOPMENT OF ECONOMIC CORRIDORS, INTER CORRIDORS AND FEEDER ROUTES TO IMPROVE THE EFFICIENCY OF FREIGHT MOVEMENTS IN INDIA UNDER BHARATMALA PARIYOJANA (LOT-1:PACKAGE IV)

DESIGN CONSULTANT:

VOYANTS SOLUTIONS PVT LTD.
403, 4th Floor, Park Centra,
Sector-30, NH-8
Gurugram-122001, Haryana, India
CIN- U74140HR2004PTC046918
Ph: 0124-4598200, Fax: 0124-4019051,
E-mail: info@voyants.in, www.voyants.in

Detailed Project Report

REV.	DATE	DESCRIPTION

DESIGNED BY	DRAWN BY	CHECKED BY	APPROVED BY
PD/PS	SS/SP	DGR	SKC
SCALE : N.T.S		SHEET SIZE	A2

TITLE :

Typical Details of Overhead Sign

DRG. No. : VSPL/1718-082/DPR/PKG-4/MIS- 04 (Sheet 02 of 02)

REVISION:R0 OCTOBER 2022

PATH: C:\Shampa\Q.Project\1718082_Bharatmala_Assam_P-4\2.October_2022\New folder\Assam P4 SS\7.Misc\MIS_04_Over_Head_Sign.dwg

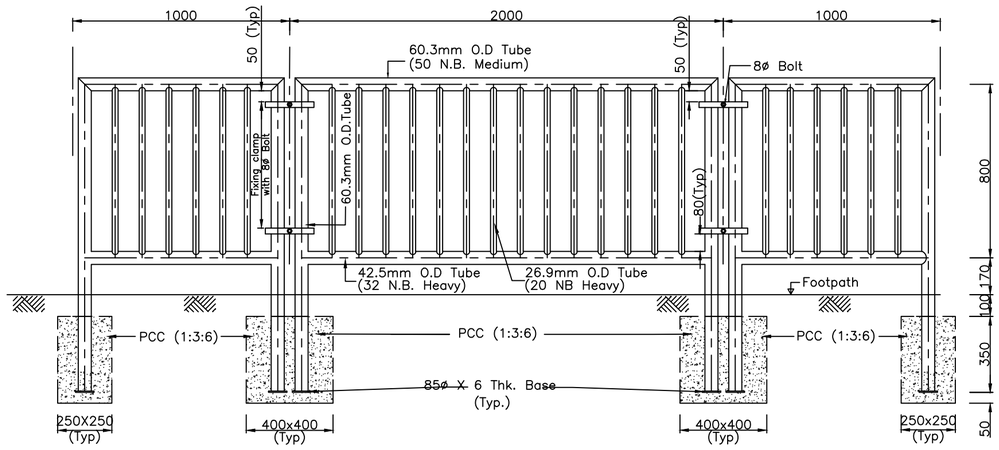

Typical Details for Pedestrian Guard Rail (PGR)

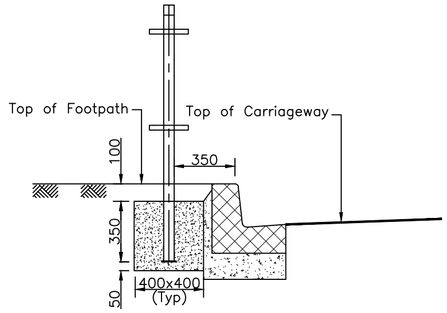

Side View of PGR

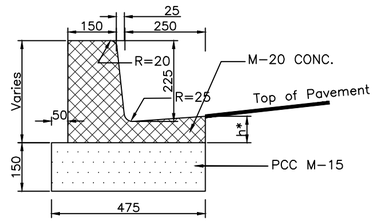

Kerb with Channel

*h – Depends on thickness (BC + DBM)

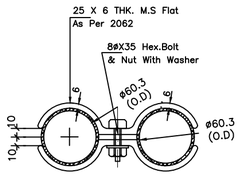

Details of Fixing Clamp
(Pedestrian Guard Rail)

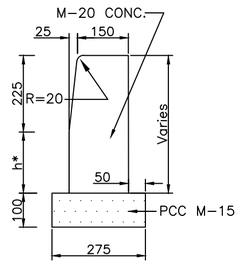

Kerb

*h – Depends on thickness (BC + DBM)

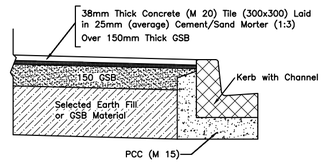

Details of Footpath

Notes:

1. All dimensions are in millimetres unless otherwise mentioned.
2. All fillet welds shall be 3 mm thick.
3. Details of pedestrian guard rails are for typical modules in straight. Length of modules shall need some adjustments to fit in the individual runs of the fencing between discontinuties at locations of cross roads, driveways etc. A fencing plan finalising the details shall be prepared by the concessioner/contractor after final setting out and as approved by the Engineer.
4. After erection, kerbs shall be painted with one coat of primer and two coats of colour paint. All colour paints shall be ready mix oil bound and shall be approved by the Engineer.
5. Kerb shall be provided at every location except some selected stretches where kerb with channel shall be provided.
6. Besides the above, standards and specifications mentioned in IRC : SP : 84–2014 shall be followed strictly whenever applicable.

PATH: C:\Shampa\0-Project\1718082_Bharatmala_Assam_P-4\2-October_2022\New folder\Assam P4 SS\7-Misc\MIS_05_Kerb_Footpath.dwg

CLIENT :

NATIONAL HIGHWAYS AND INFRASTRUCTURE DEVELOPMENT CORPORATION LTD.
(MINISTRY OF ROAD TRANSPORT AND HIGHWAYS)
GOVERNMENT OF INDIA

PROJECT :

CONSULTANCY SERVICES FOR PREPARATION OF DETAILED PROJECT REPORT FOR DEVELOPMENT OF ECONOMIC CORRIDORS, INTER CORRIDORS AND FEEDER ROUTES TO IMPROVE THE EFFICIENCY OF FREIGHT MOVEMENTS IN INDIA UNDER BHARATMALA PARIYOJANA (LOT-1:PACKAGE IV)

DESIGN CONSULTANT:

VOYANTS SOLUTIONS PVT LTD.
403, 4th Floor, Park Centra,
Sector-30, NH-8
Gurugram-122001, Haryana, India
CIN- U74140HR2004PTC046918
Ph: 0124-4598200, Fax: 0124-4019051,
E-mail: info@voyants.in, www.voyants.in

Detailed Project Report

REV.	DATE	DESCRIPTION

DESIGNED BY	DRAWN BY	CHECKED BY	APPROVED BY
PD/PS	SS/SP	DGR	SKC
SCALE :	N.T.S	SHEET SIZE	A2

TITLE :
Typical Deatils of Kerb, Kerb with Channel Footpath & Pedestrial Guard Rail

DRG. No. :
VSPL/1718-082/DPR/PKG-4/MIS- 05

REVISION:R0 | OCTOBER 2022

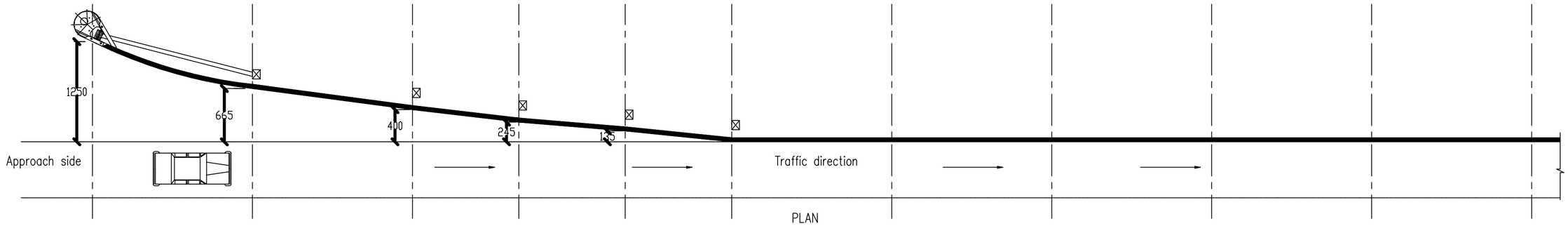

PLAN

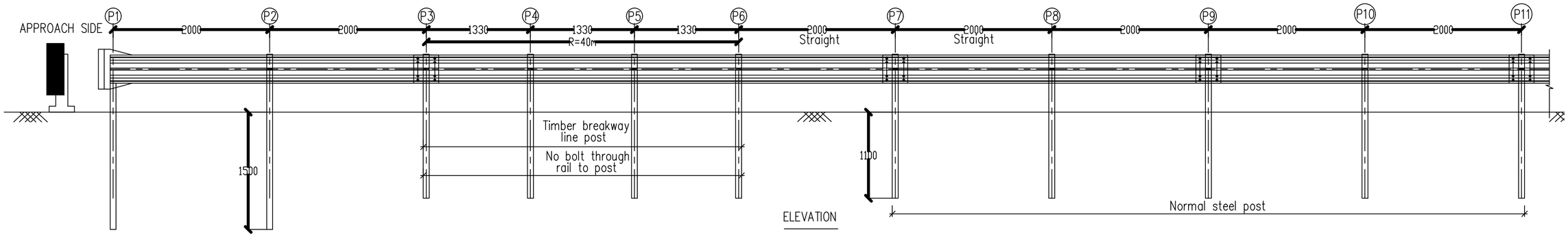

ELEVATION

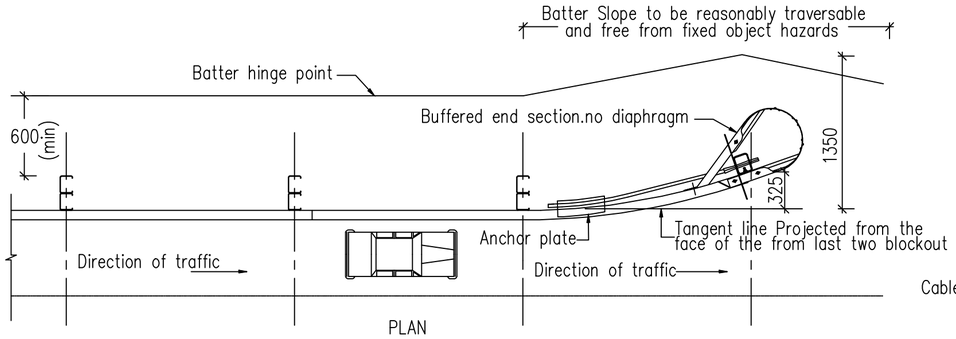

PLAN

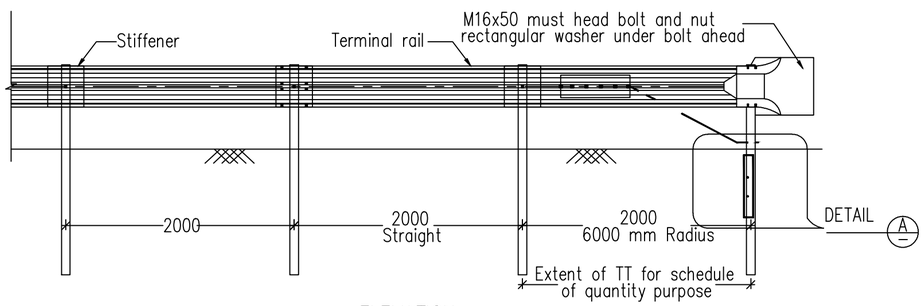

ELEVATION

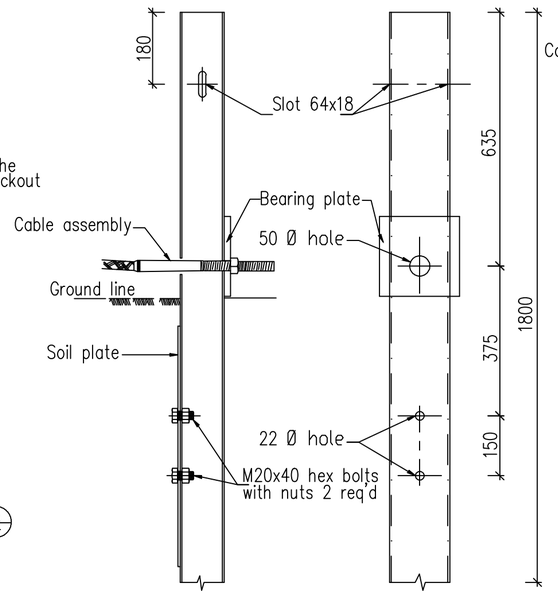

DETAIL–A SECTION 1–1

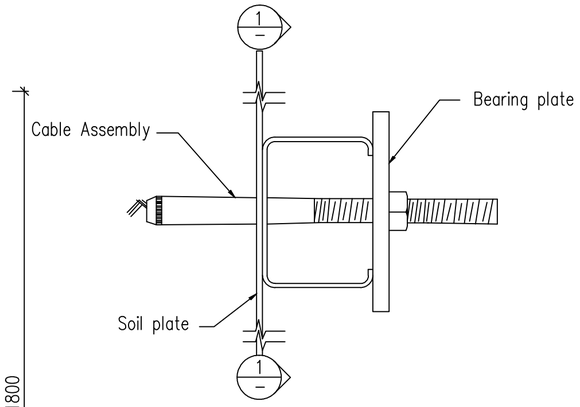

Notes:
1. All dimensions are in millimeter unless otherwise specified.
2. Hot dipped galvanized section as per mort & h specification shall be used for vertical post & spacer.
3. Thickness of W–beam shall be 3 mm.
4. Thickness of channel section shall be 5 mm.

CLIENT :	PROJECT :	DESIGN CONSULTANT:	Detailed Project Report	DESIGNED BY	DRAWN BY	CHECKED BY	APPROVED BY	TITLE :
NATIONAL HIGHWAYS AND INFRASTRUCTURE DEVELOPMENT CORPORATION LTD. (MINISTRY OF ROAD TRANSPORT AND HIGHWAYS) GOVERNMENT OF INDIA	CONSULTANCY SERVICES FOR PREPARATION OF DETAILED PROJECT REPORT FOR DEVELOPMENT OF ECONOMIC CORRIDORS, INTER CORRIDORS AND FEEDER ROUTES TO IMPROVE THE EFFICIENCY OF FREIGHT MOVEMENTS IN INDIA UNDER BHARATMALA PARIYOJANA (LOT-1:PACKAGE IV)	VOYANTS SOLUTIONS PVT LTD. 403, 4th Floor, Park Centra, Sector-30, NH-8 Gurugram-122001, Haryana, India CIN- U74140HR2004PTC046918 Ph: 0124-4598200, Fax: 0124-4019051, E-mail: info@voyants.in, www.voyants.in		PD/PS	SS/SP	DGR	SKC	Typical Details of Metal Beam Crash Barrier
				SCALE : N.T.S		SHEET SIZE A2		DRG. No. : VSPL/1718-082/DPR/PKG-4/MIS- 06 (Sheet 01 of 03)
			REV. DATE DESCRIPTION					REVISION:R0 OCTOBER 2022

PATH: C:\Shampa\0-Project\1718082_Bharatmala_Assam_P-4\2.October_2022\New folder\Assam P4 SS\7.Misc\MIS_06_Metal_Beam_Barrier.dwg

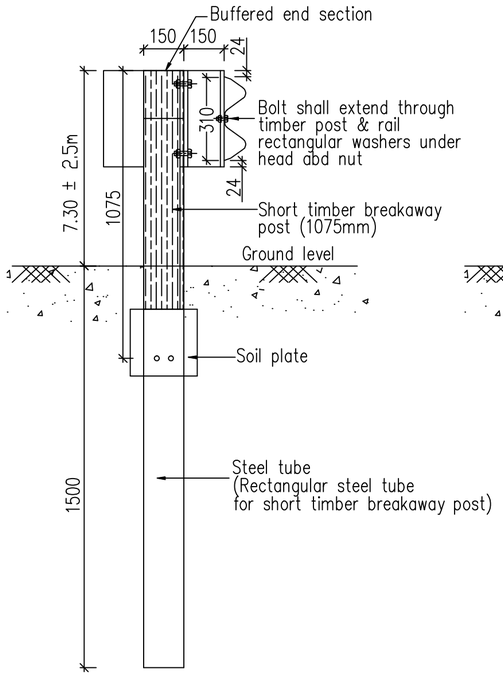

POST NO. P1

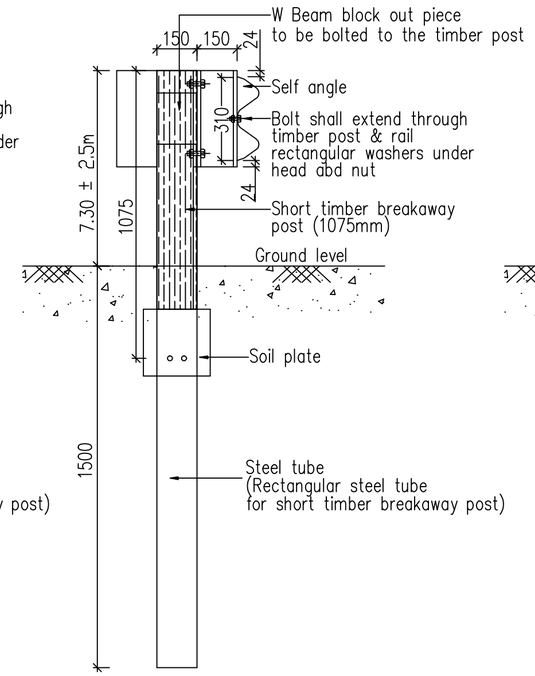

POST NO. P2

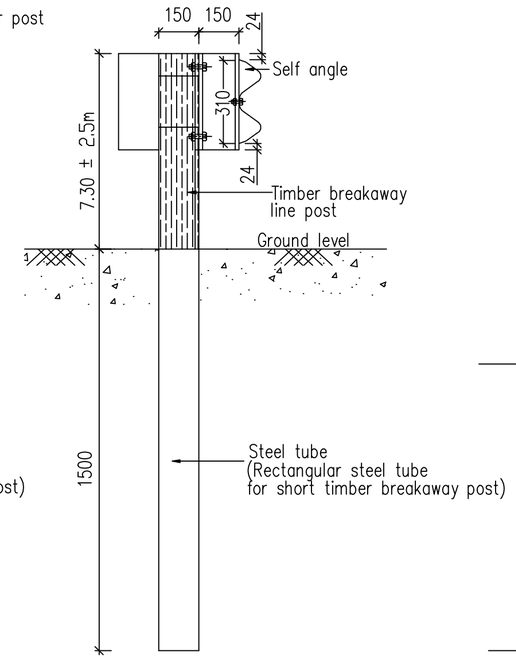

POST NO. P3 to P6

MODIFIED ECCENTRIC LOADER TERMINAL (MELT)
GENERAL ARRANGEMENT

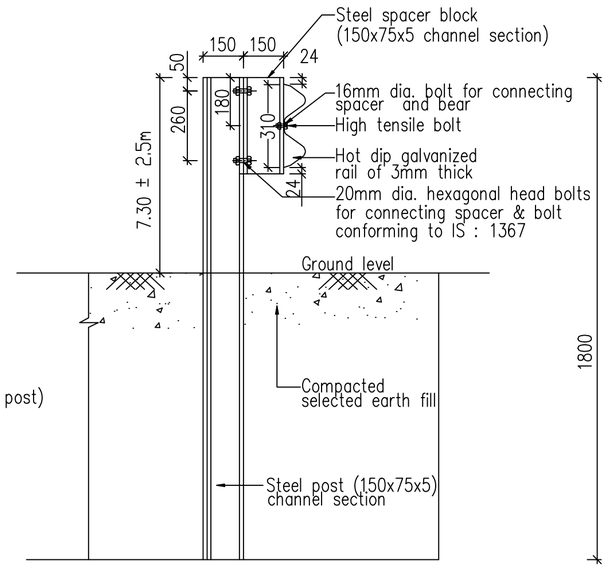

DETAILS AT POST

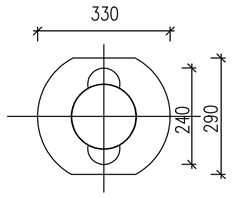

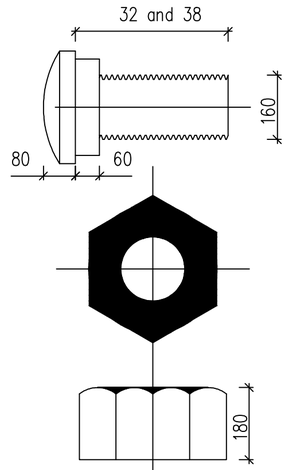

SPLICE BOLT AND NUT

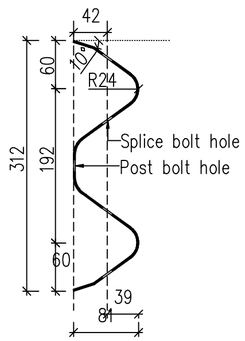

DETAILS OF W- BEAM

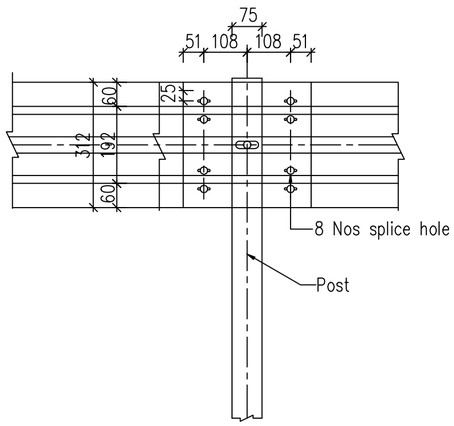

DETAIL 'A'

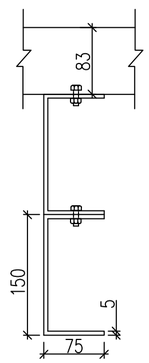

CHANNEL SECTION FOR POST & SPACER

Notes:
1. All dimensions are in millimeter unless otherwise specified.
2. Hot dipped galvanized section as per mort & h specification shall be used for vertical post & spacer.
3. Thickness of W-beam shall be 3 mm.
4. Thickness of channel section shall be 5 mm.

CLIENT :	PROJECT :	DESIGN CONSULTANT:	Detailed Project Report	DESIGNED BY	DRAWN BY	CHECKED BY	APPROVED BY	TITLE :
NATIONAL HIGHWAYS AND INFRASTRUCTURE DEVELOPMENT CORPORATION LTD. (MINISTRY OF ROAD TRANSPORT AND HIGHWAYS) GOVERNMENT OF INDIA	CONSULTANCY SERVICES FOR PREPARATION OF DETAILED PROJECT REPORT FOR DEVELOPMENT OF ECONOMIC CORRIDORS, INTER CORRIDORS AND FEEDER ROUTES TO IMPROVE THE EFFICIENCY OF FREIGHT MOVEMENTS IN INDIA UNDER BHARATMALA PARIYOJANA (LOT-1:PACKAGE IV)	VOYANTS SOLUTIONS PVT LTD. 403, 4th Floor, Park Centra, Sector-30, NH-8 Gurugram-122001, Haryana, India CIN- U74140HR2004PTC046918 Ph: 0124-4598200, Fax: 0124-4019051, E-mail: info@voyants.in, www.voyants.in		PD/PS	SS/SP	DGR	SKC	Typical Details of Metal Beam Crash Barrier
				SCALE : N.T.S		SHEET SIZE A2		DRG. No. : VSPL/1718-082/DPR/PKG-4/MIS- 06 (Sheet 02 of 03)
			REV. DATE DESCRIPTION					REVISION:R0 OCTOBER 2022

PATH: C:\Shampa\0.Project\1718082_Bharatmala_Assam_P-4\2.October_2022\New folder\Assam P4 SS\7.Misc\MIS_06_Metal_Beam_Barrier.dwg

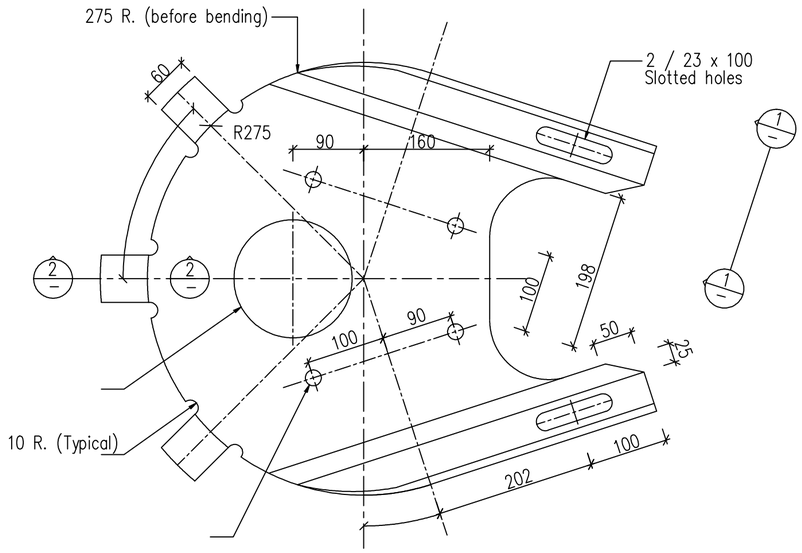

DIAPHRAGM PLATE

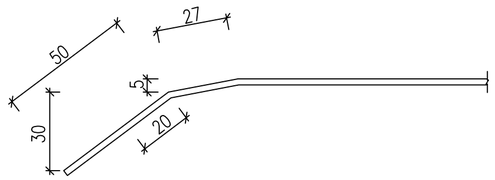

SECTION 1–1

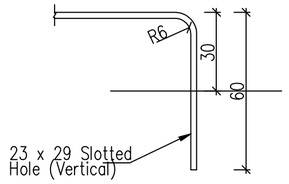

SECTION 2–2

MODIFIED ECCENTRIC LOADER TERMINAL (MELT)
DIAPHRAGM PLATE DETAIL

Notes:
1. All dimensions are in millimeter unless otherwise shown.
2. Dimension are subject to manufacturer's tolerance except where allowable tolerance are nominated.

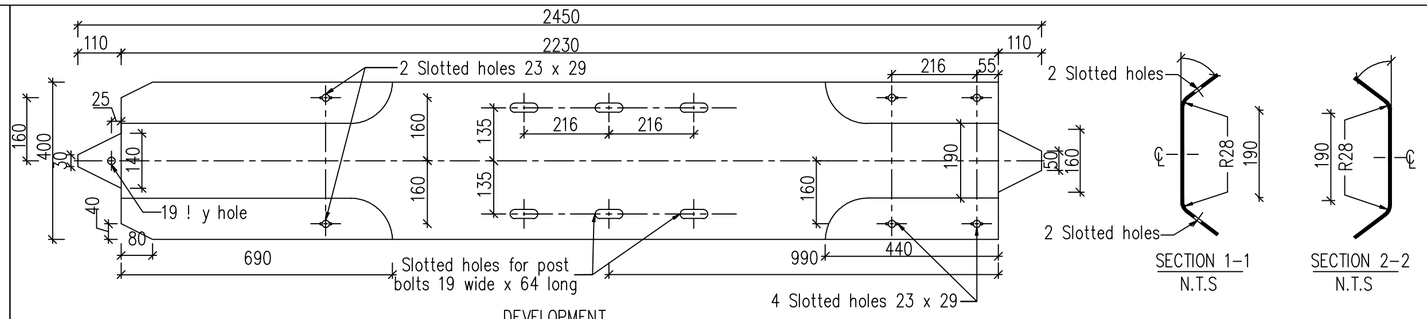

DEVELOPMENT
BUFFERING END SECTION

SECTION 1–1
N.T.S

SECTION 2–2
N.T.S

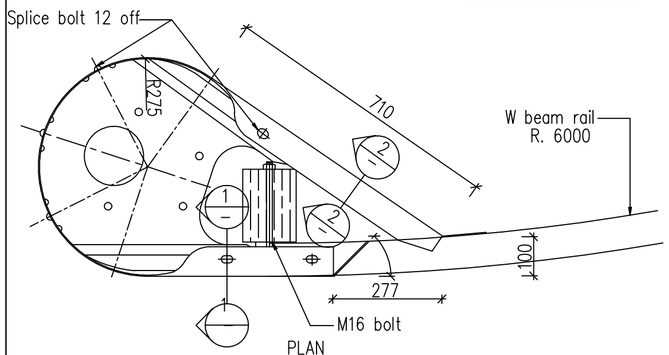

PLAN

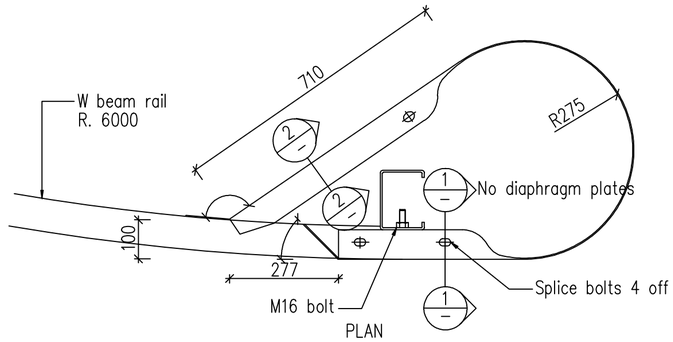

PLAN

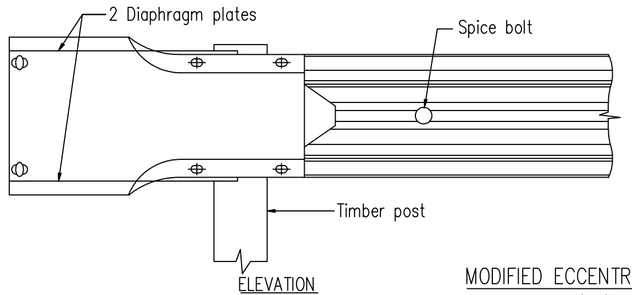

ELEVATION
ASSEMBLED END – MELT

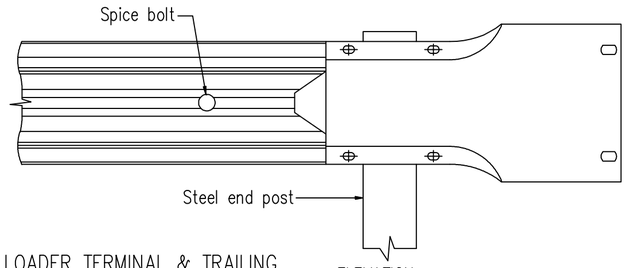

ELEVATION
ASSEMBLED END – TT

MODIFIED ECCENTRIC LOADER TERMINAL & TRAILING
TERMINAL (TT) BUFFERING END SECTION DETAIL

Notes:
1. All dimensions are in millimeter unless otherwise shown.
2. Dimension are subject to manufacturer's tolerance except where allowable tolerance are nominated.

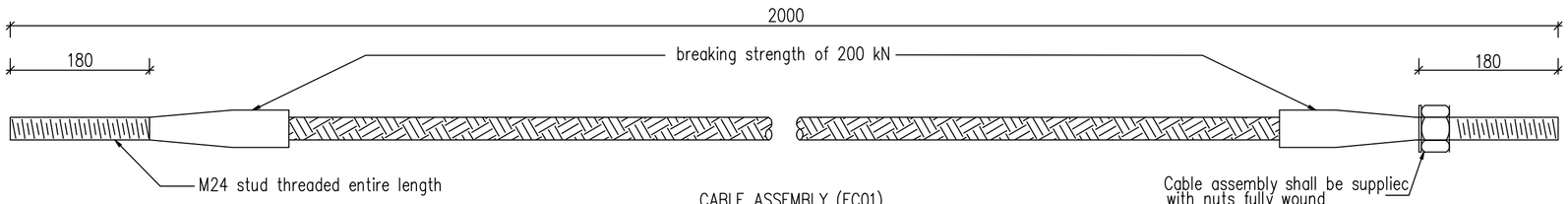

CABLE ASSEMBLY (FC01)

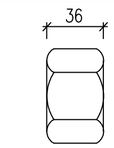

M24 NUT FOR
CABLE ASSEMBLY

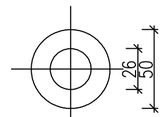

24ØGALV.ROUND
WASHER

MODIFIED ECCENTRIC LOADER TERMINAL &
TRAILING TERMINAL(TT) CABLE ASSEMBLY AND FASTENERS

Notes:
1. All dimensions are in millimeter unless otherwise specified
2. Cable shall be supplied with two 36 thick M24 hexagon galvanized steel nuts and two 5 thick gal. steel washers.
3. Nuts shall be tapped to suit galvanized thread. black steel washer,large series nuts and washers to be treated and shall be not dip galvanized in accordance with the requirement
4. Dimension are subject to manufacturer's tolerances except where allowable tolerances are nominated.

CLIENT :	PROJECT :	DESIGN CONSULTANT:	Detailed Project Report	DESIGNED BY	DRAWN BY	CHECKED BY	APPROVED BY	TITLE :
NATIONAL HIGHWAYS AND INFRASTRUCTURE DEVELOPMENT CORPORATION LTD. (MINISTRY OF ROAD TRANSPORT AND HIGHWAYS) GOVERNMENT OF INDIA	CONSULTANCY SERVICES FOR PREPARATION OF DETAILED PROJECT REPORT FOR DEVELOPMENT OF ECONOMIC CORRIDORS, INTER CORRIDORS AND FEEDER ROUTES TO IMPROVE THE EFFICIENCY OF FREIGHT MOVEMENTS IN INDIA UNDER BHARATMALA PARIYOJANA (LOT-1:PACKAGE IV)	VOYANTS SOLUTIONS PVT LTD. 403, 4th Floor, Park Centra, Sector-30, NH-8 Gurugram-122001, Haryana, India CIN- U74140HR2004PTC046918 Ph: 0124-4598200, Fax: 0124-4019051, E-mail: info@voyants.in, www.voyants.in	REV. DATE DESCRIPTION	PD/PS	SS/SP	DGR	SKC	Typical Details of Metal Beam Crash Barrier
				SCALE : N.T.S		SHEET SIZE A2		DRG. No. : VSPL/1718-082/DPR/PKG-4/MIS- 06 (Sheet 03 of 03)
								REVISION:R0 OCTOBER 2022

PATH: C:\Shampa\0-Project\1718082_Bharatmala_Assam_P-4\2.October_2022\New folder\Assam P4 SS\7.Misc\MIS_06_Metal_Beam_Barrier.dwg

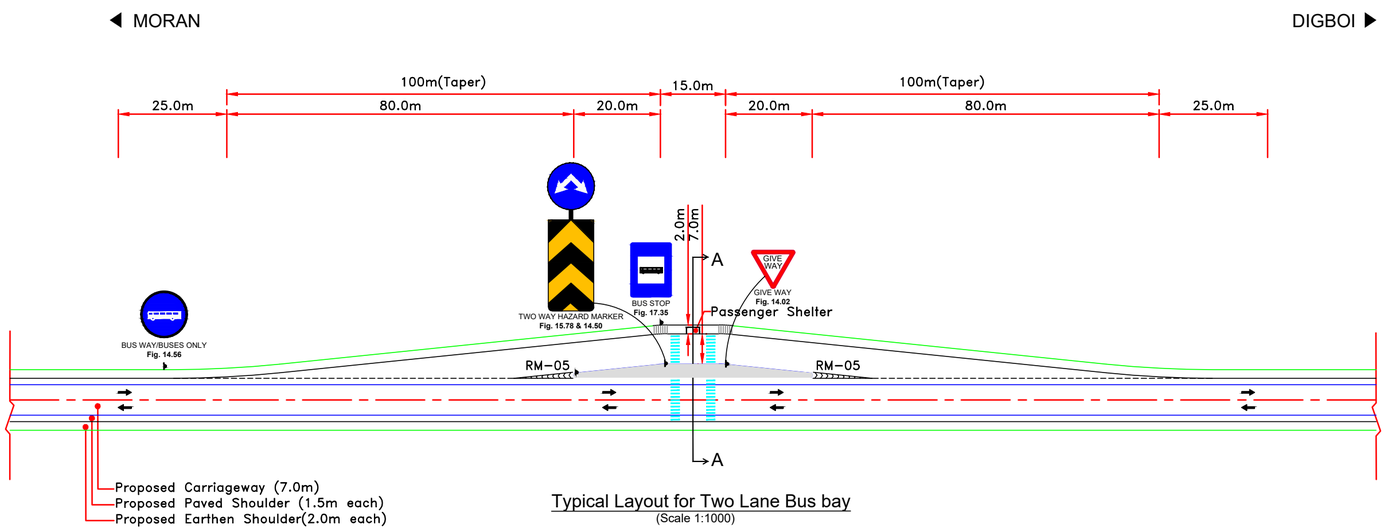

Typical Layout for Two Lane Bus bay
(Scale 1:1000)

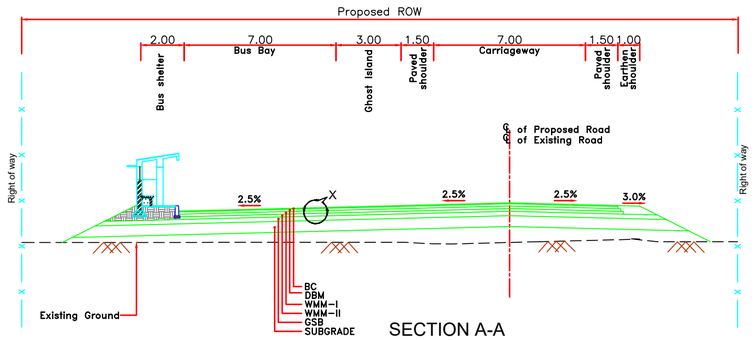

SECTION A-A
(Scale 1:200)

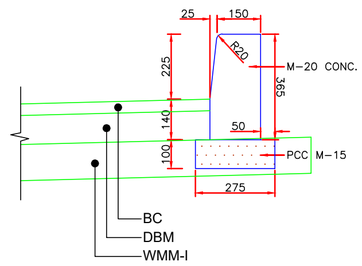

Details of Kerb (X)
(Scale 1:15)

Note:
1. All dimensions are in meter unless otherwise specified.

CLIENT :	PROJECT :	DESIGN CONSULTANT:	Detailed Project Report	DESIGNED BY	DRAWN BY	CHECKED BY	APPROVED BY	TITLE :
NATIONAL HIGHWAYS AND INFRASTRUCTURE DEVELOPMENT CORPORATION LTD. (MINISTRY OF ROAD TRANSPORT AND HIGHWAYS) GOVERNMENT OF INDIA	CONSULTANCY SERVICES FOR PREPARATION OF DETAILED PROJECT REPORT FOR DEVELOPMENT OF ECONOMIC CORRIDORS, INTER CORRIDORS AND FEEDER ROUTES TO IMPROVE THE EFFICIENCY OF FREIGHT MOVEMENTS IN INDIA UNDER BHARATMALA PARIYOJANA (LOT-1:PACKAGE IV)	VOYANTS SOLUTIONS PVT LTD. 403, 4th Floor, Park Centra, Sector-30, NH-8 Gurugram-122001, Haryana, India CIN- U74140HR2004PTC046918 Ph: 0124-4598200, Fax: 0124-4019051, E-mail: info@voyants.in, www.voyants.in		PD/PS	SS/SP	DGR	SKC	Typical Detail of Bus Bay
				SCALE : AS SHOWN		SHEET SIZE	A2	DRG. No. : VSPL/1718-082/DPR/PKG-4/MIS- 07
			REV. DATE DESCRIPTION					REVISION:R0 OCTOBER 2022

PATH: C:\Shompa\0-Project\1718082_Bharatmala_Assam_P-4\2.October_2022\New folder\Assam P4 SS\7.Misc\MIS_07_Busbay.dwg

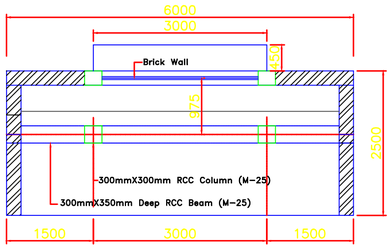

Plan of Passenger Shelter
Scale 1:75

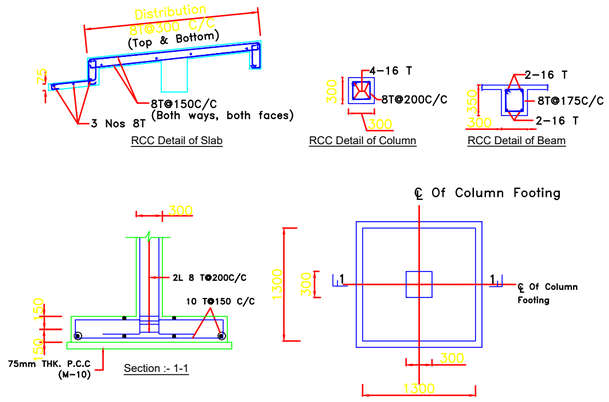

Plan Showing Column Foundation
Scale 1:50

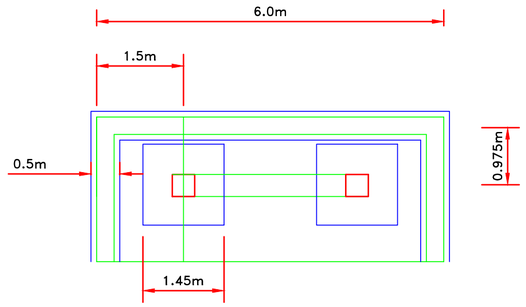

Foundation Plan
Scale 1:75

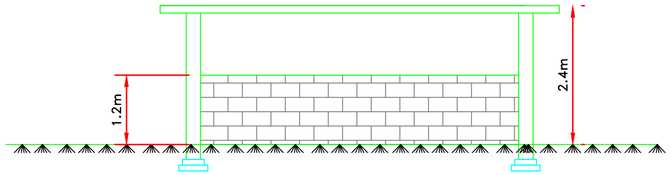

Front Elevation
Scale 1:75

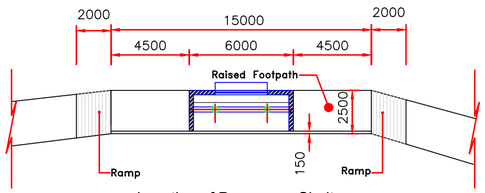

Location of Passenger Shelter
Scale 1:250

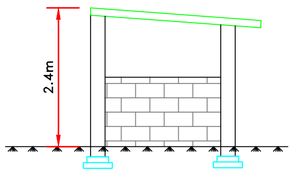

Side Elevation
Scale 1:75

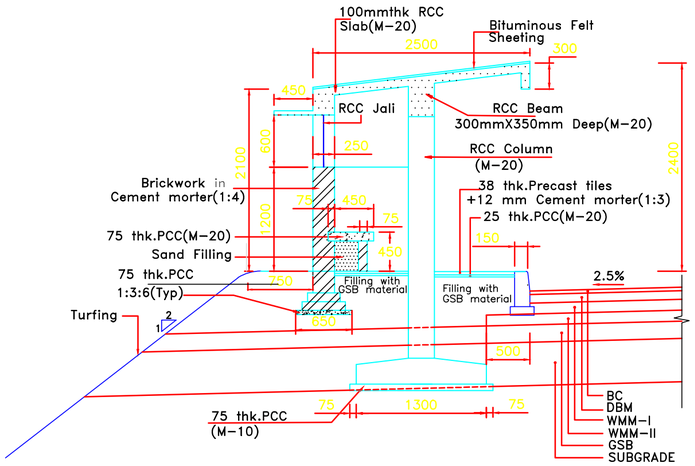

Section of Passenger Shelter
Scale 1:50

PATH: C:\Shompa\0.Project\1718082_Bharatmala_Assam_P-4\2.October_2022\New folder\Assam P4 SS\7.Misc\MIS_08_Bus Shelter.dwg

CLIENT :	PROJECT :	DESIGN CONSULTANT:	Detailed Project Report	DESIGNED BY	DRAWN BY	CHECKED BY	APPROVED BY	TITLE :
NATIONAL HIGHWAYS AND INFRASTRUCTURE DEVELOPMENT CORPORATION LTD. (MINISTRY OF ROAD TRANSPORT AND HIGHWAYS) GOVERNMENT OF INDIA	CONSULTANCY SERVICES FOR PREPARATION OF DETAILED PROJECT REPORT FOR DEVELOPMENT OF ECONOMIC CORRIDORS, INTER CORRIDORS AND FEEDER ROUTES TO IMPROVE THE EFFICIENCY OF FREIGHT MOVEMENTS IN INDIA UNDER BHARATMALA PARIYOJANA (LOT-1:PACKAGE IV)	VOYANTS SOLUTIONS PVT LTD. 403, 4th Floor, Park Centra, Sector-30, NH-8 Gurugram-122001, Haryana, India CIN- U74140HR2004PTC046918 Ph: 0124-4598200, Fax: 0124-4019051, E-mail: info@voyants.in, www.voyants.in	REV. DATE DESCRIPTION	PD/PS	SS/SP	DGR	SKC	Typical Detail Passenger Shelter
				SCALE :	N.T.S	SHEET SIZE	A2	DRG. No. : VSPL/1718-082/DPR/PKG-4/MIS- 08
								REVISION:R0 OCTOBER 2022

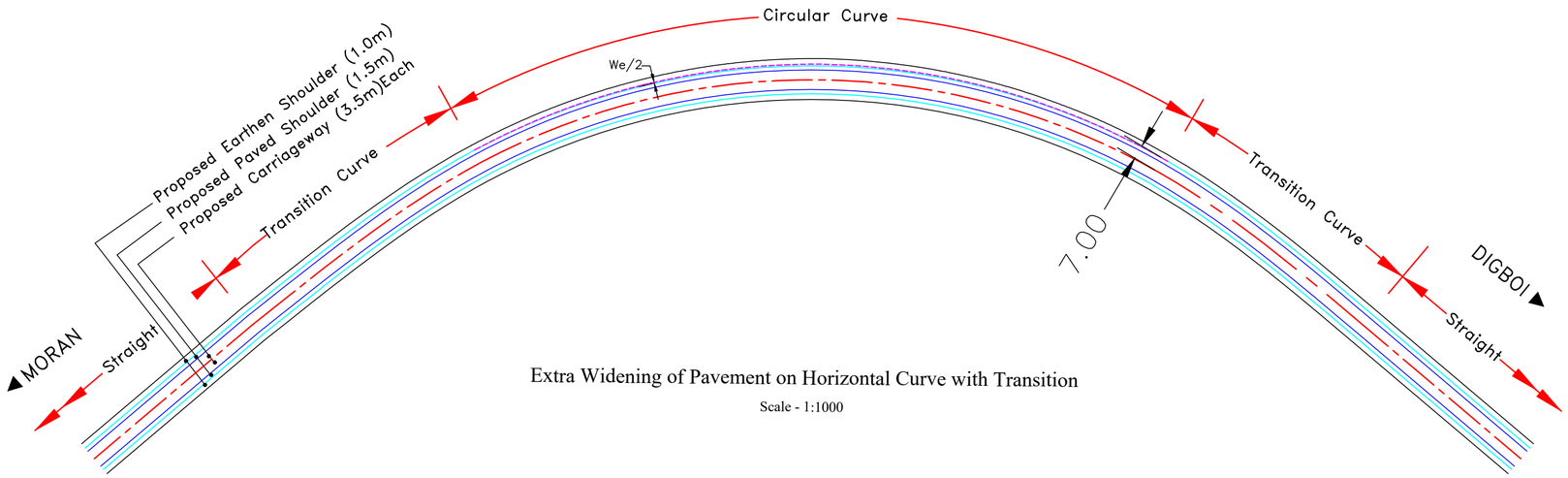

Extra Widening of Pavement on Horizontal Curve with Transition

Scale - 1:1000

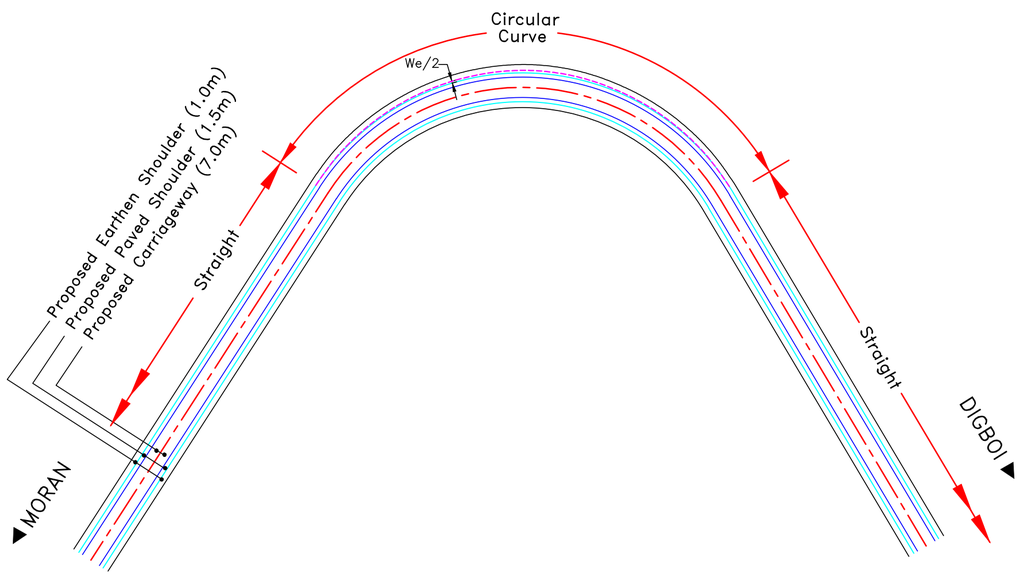

Extra Widening of Pavement on Horizontal Curve (Without Transition)

Scale - 1:1000

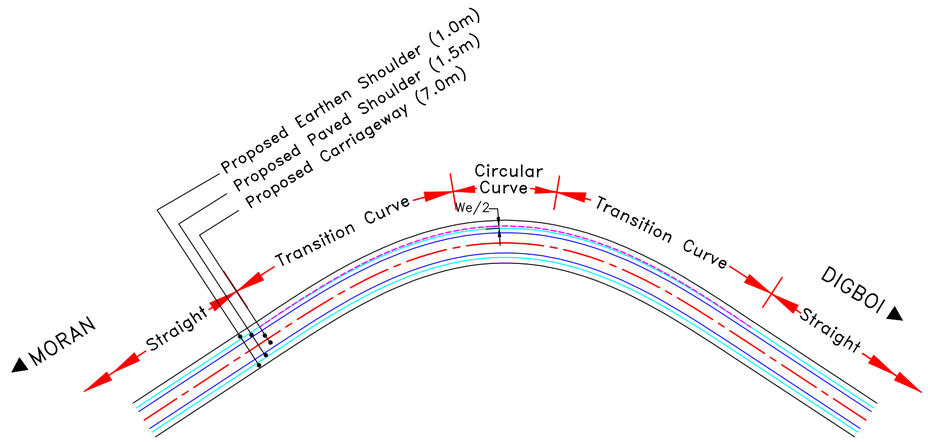

Extra Widening of Pavement on Sharp Curve

Scale - 1:2500

Notes:

1. All dimensions are in metres unless otherwise mentioned.
2. Standards and specifications mentioned in IRC:SP:73–2015 shall be followed strictly whenever applicable.
3. This drawing is applicable for the stretches with raised median.

CLIENT :	PROJECT :	DESIGN CONSULTANT:	Detailed Project Report	DESIGNED BY	DRAWN BY	CHECKED BY	APPROVED BY	TITLE :
NATIONAL HIGHWAYS AND INFRASTRUCTURE DEVELOPMENT CORPORATION LTD. (MINISTRY OF ROAD TRANSPORT AND HIGHWAYS) GOVERNMENT OF INDIA	CONSULTANCY SERVICES FOR PREPARATION OF DETAILED PROJECT REPORT FOR DEVELOPMENT OF ECONOMIC CORRIDORS, INTER CORRIDORS AND FEEDER ROUTES TO IMPROVE THE EFFICIENCY OF FREIGHT MOVEMENTS IN INDIA UNDER BHARATMALA PARIYOJANA (LOT-1:PACKAGE IV)	VOYANTS SOLUTIONS PVT LTD. 403, 4th Floor, Park Centra, Sector-30, NH-8 Gurugram-122001, Haryana, India CIN- U74140HR2004PTC046918 Ph: 0124-4598200, Fax: 0124-4019051, E-mail: info@voyants.in, www.voyants.in	REV. | DATE | DESCRIPTION	PD/PS	SS/SP	DGR	SKC	Typical Details of Extra Widening
				SCALE : N.T.S.		SHEET SIZE A2		DRG. No. : VSPL/1718-082/DPR/PKG-4/MIS- 09
								REVISION:R0 | OCTOBER 2022

PATH: C:\Sharnpa\0.Project\1718082_Bharatmala_Assam_P-4\2.October_2022\New folder\Assam P4 SS\7.Misc\MIS_09_Extra_Widening.dwg

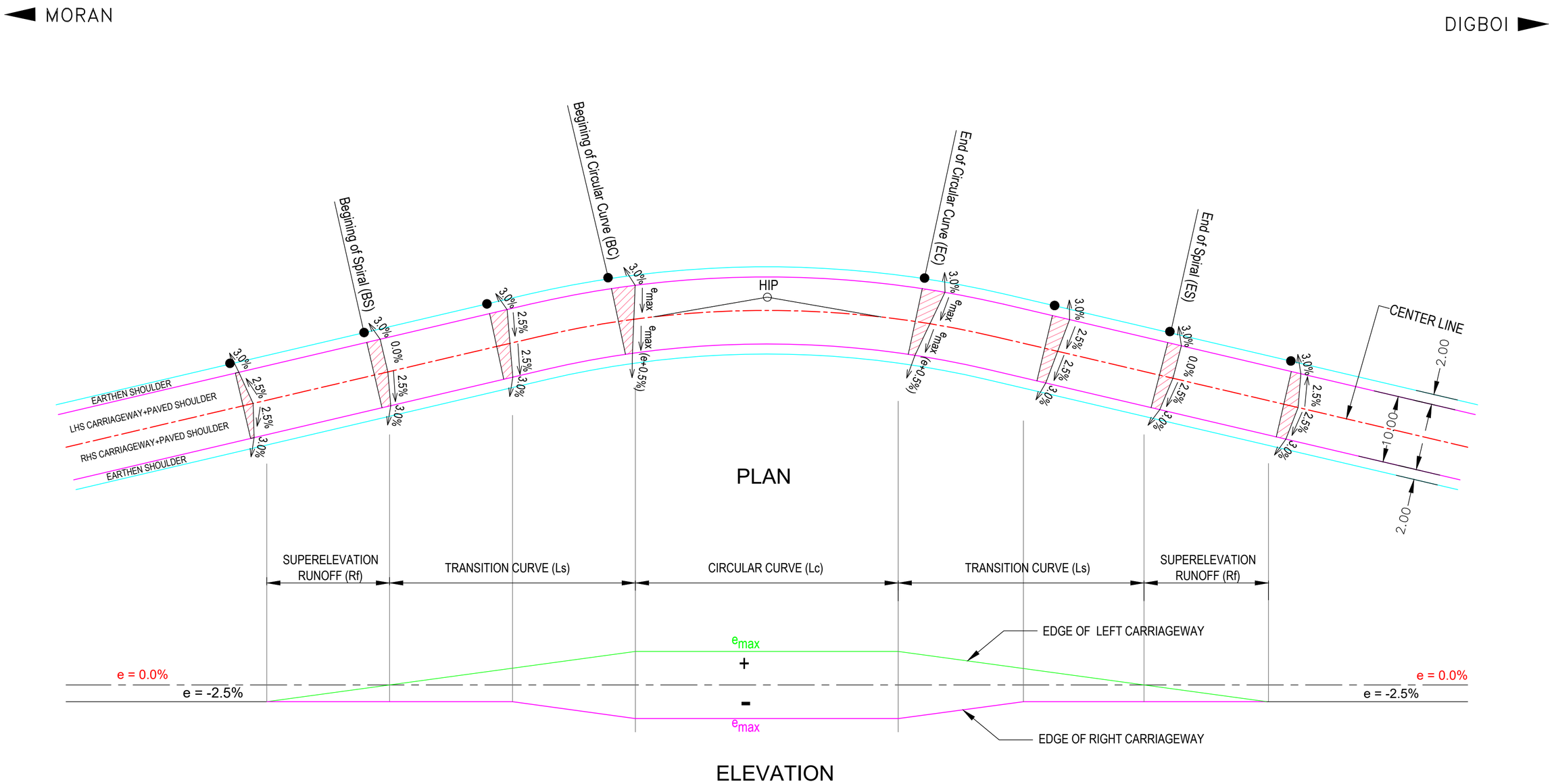

Notes:

1. $R_f = L_s \times 2.5/e$
2. Maximum Superelevation (e_{max})=$V^2/(225xR)$ Limited to 5%
3. Besides the above, standards and specifications mentioned in IRC:SP:73–2015 shall be followed strictly whenever applicable.
4. All dimensions are in metres unless otherwise mentioned.

CLIENT :	PROJECT :	DESIGN CONSULTANT:
NATIONAL HIGHWAYS AND INFRASTRUCTURE DEVELOPMENT CORPORATION LTD. (MINISTRY OF ROAD TRANSPORT AND HIGHWAYS) GOVERNMENT OF INDIA	CONSULTANCY SERVICES FOR PREPARATION OF DETAILED PROJECT REPORT FOR DEVELOPMENT OF ECONOMIC CORRIDORS, INTER CORRIDORS AND FEEDER ROUTES TO IMPROVE THE EFFICIENCY OF FREIGHT MOVEMENTS IN INDIA UNDER BHARATMALA PARIYOJANA (LOT-1:PACKAGE IV)	VOYANTS SOLUTIONS PVT LTD. 403, 4th Floor, Park Centra, Sector-30, NH-8 Gurugram-122001, Haryana, India CIN- U74140HR2004PTC046918 Ph: 0124-4598200, Fax: 0124-4019051, E-mail: info@voyants.in, www.voyants.in

Detailed Project Report

REV.	DATE	DESCRIPTION

DESIGNED BY	DRAWN BY	CHECKED BY	APPROVED BY
PD/PS	SS/SP	DGR	SKC
SCALE :	N.T.S.	SHEET SIZE	A2

TITLE : Details of Superelevtion

DRG. No. : VSPL/1718-082/DPR/PKG-4/MIS- 10

REVISION:R0 | OCTOBER 2022

PATH: C:\Shompa\0-Project\1718082_Bharatmala_Assam_P-4\2.October_2022\New folder\Assam P4 SS\7.Misc\MIS_10_Superelevation.dwg

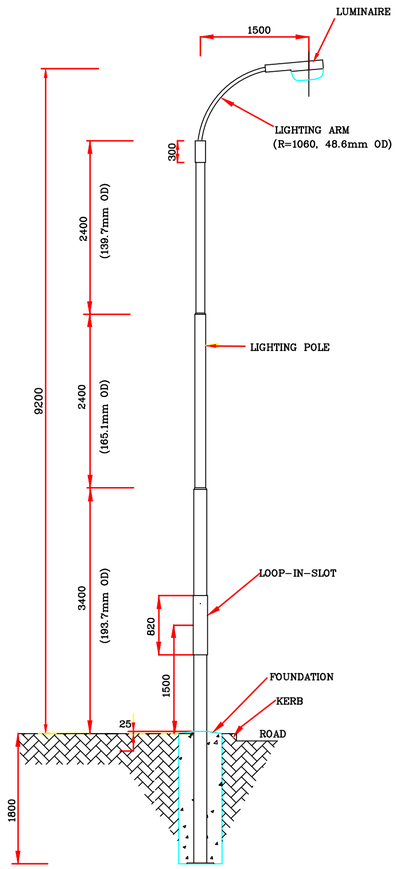

TYPICAL VIEW (TYPE-A1)
(ON THE FOOTPATH/MEDIAN/GROUND)

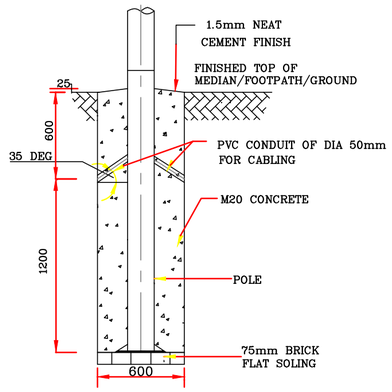

SECTION A-A

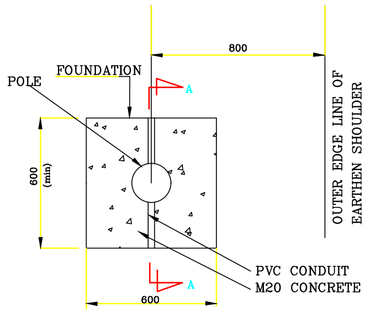

FOUNDATION PLAN & LOCATION OF TYPE A1
POLE OUTSIDE EDGE OF HARD SHOULDER

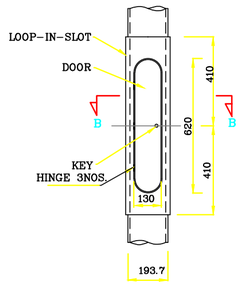

VIEW OF
LOOP-IN-SLOT

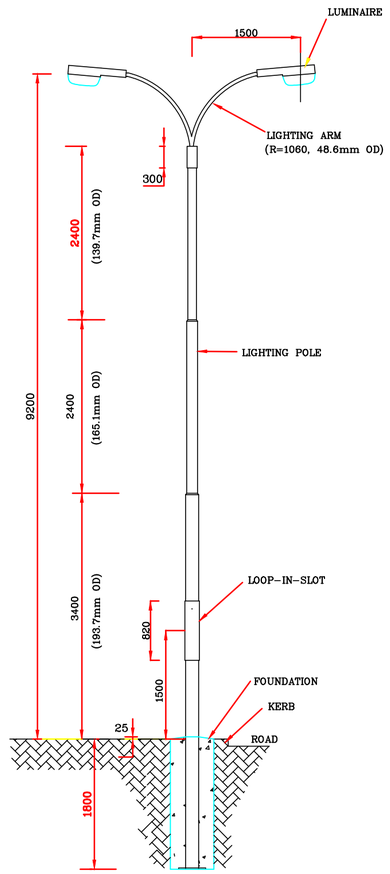

TYPICAL VIEW (TYPE-A2)
(ON THE FOOTPATH/MEDIAN)

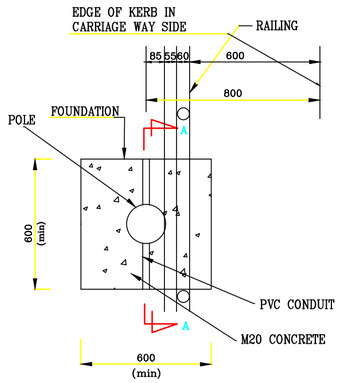

FOUNDATION PLAN
(ON THE FOOTPATH/MEDIAN)

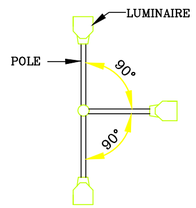

ORIENTATION OF ARM
IN A4 TYPE POLE

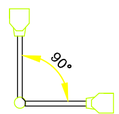

ORIENTATION OF ARM
IN A3 TYPE POLE

Notes:

1. All dimensions are in milimetres unless otherwise mentioned.
2. Pole type- 410SP46 as per IS:2713 (P.T.- 1 to 3) :1980
3. Dimensions are indicative, may vary during execution of work
4. Besides the above, standards and specifications mentioned in IRC : SP : 84-2014 shall be followed strictly whenever applicable.

CLIENT :	PROJECT :	DESIGN CONSULTANT:	Detailed Project Report	DESIGNED BY	DRAWN BY	CHECKED BY	APPROVED BY	TITLE :
NATIONAL HIGHWAYS AND INFRASTRUCTURE DEVELOPMENT CORPORATION LTD. (MINISTRY OF ROAD TRANSPORT AND HIGHWAYS) GOVERNMENT OF INDIA	CONSULTANCY SERVICES FOR PREPARATION OF DETAILED PROJECT REPORT FOR DEVELOPMENT OF ECONOMIC CORRIDORS, INTER CORRIDORS AND FEEDER ROUTES TO IMPROVE THE EFFICIENCY OF FREIGHT MOVEMENTS IN INDIA UNDER BHARATMALA PARIYOJANA (LOT-1:PACKAGE IV)	VOYANTS SOLUTIONS PVT LTD. 403, 4th Floor, Park Centra, Sector-30, NH-8 Gurugram-122001, Haryana, India CIN- U74140HR2004PTC046918 Ph: 0124-4598200, Fax: 0124-4019051, E-mail: info@voyants.in, www.voyants.in		PD/PS	SS/SP	DGR	SKC	Typical Details of Single Arm and Double Arm Street Lighting Arrangement
								DRG. No. : VSPL/1718-082/DPR/PKG-4/MIS- 11
			REV. DATE DESCRIPTION	SCALE : N.T.S		SHEET SIZE	A2	REVISION:R0 OCTOBER 2022

PATH: C:\Shampa\0.Project\1718082_Bharatmala_Assam_P-4\2.October_2022\New folder\Assam P4 SS\7.Misc\MIS_11_Illumination.dwg

DETAILS OF DRAIN AT BUILT UP SECTION

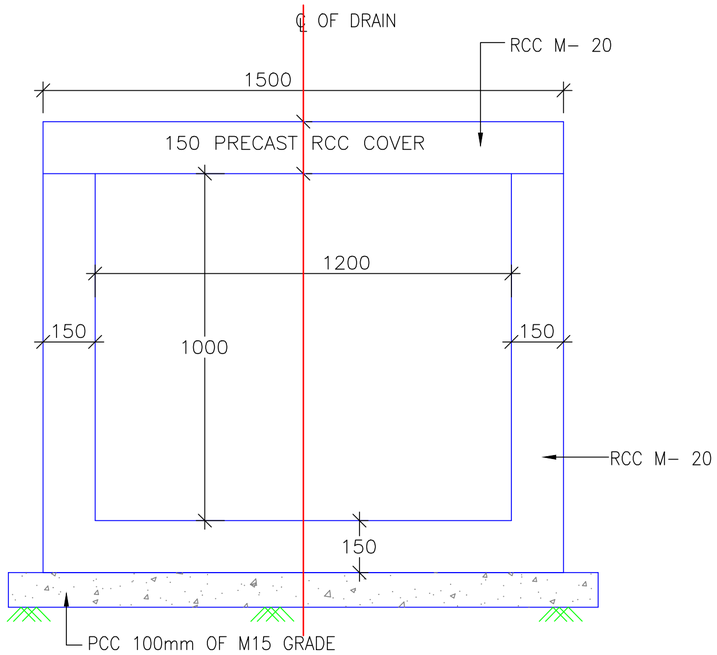

DETAILS OF DRAIN CROSS SECTION AT 2 LANE BUILT UP SECTION

(SCALE 1:25)

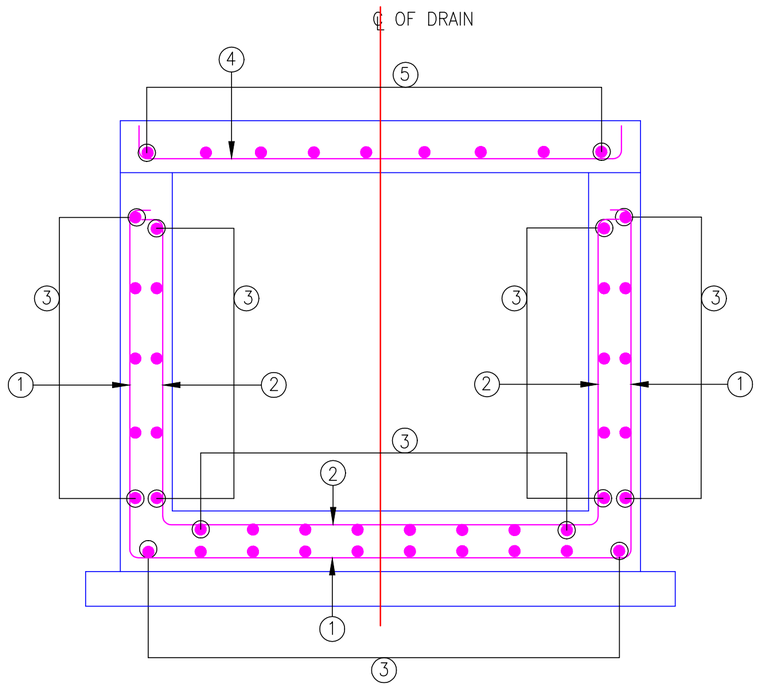

REINFORCEMENT DETAIL OF DRAIN

(SCALE 1:25)

REINF. SCHEDULE			
BAR MARK	SHAPE OF BARS (NOT TO SCALE)	BAR DIA. in mm.	SPACING in mm.
1		10	200
2		8	200
3		8	250
4		10	200
5		8	250

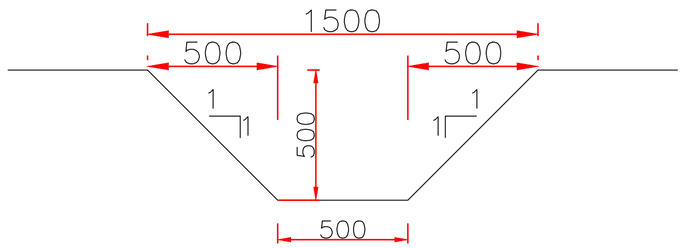

Trapezoidal Unlined Drain

Notes:

1. All dimensions are in millimetres unless otherwise mentioned.
2. Standards and specifications mentioned in IRC : SP: 73–2017 shall be followed strictly whenever applicable.

CLIENT :	PROJECT :	DESIGN CONSULTANT:
NATIONAL HIGHWAYS AND INFRASTRUCTURE DEVELOPMENT CORPORATION LTD. (MINISTRY OF ROAD TRANSPORT AND HIGHWAYS) GOVERNMENT OF INDIA	CONSULTANCY SERVICES FOR PREPARATION OF DETAILED PROJECT REPORT FOR DEVELOPMENT OF ECONOMIC CORRIDORS, INTER CORRIDORS AND FEEDER ROUTES TO IMPROVE THE EFFICIENCY OF FREIGHT MOVEMENTS IN INDIA UNDER BHARATMALA PARIYOJANA (LOT-1:PACKAGE IV)	VOYANTS SOLUTIONS PVT LTD. 403, 4th Floor, Park Centra, Sector-30, NH-8 Gurugram-122001, Haryana, India CIN- U74140HR2004PTC046918 Ph: 0124-4598200, Fax: 0124-4019051, E-mail: info@voyants.in, www.voyants.in

Detailed Project Report

REV.	DATE	DESCRIPTION

DESIGNED BY	DRAWN BY	CHECKED BY	APPROVED BY
PD/PS	SS/SP	DGR	SKC
SCALE : N.T.S.		SHEET SIZE	A2

TITLE : Typical Details of Drain

DRG. No. : VSPL/1718-082/DPR/PKG-4/MIS- 12

REVISION:R0 OCTOBER 2022

PATH: C:\Shamps\Q.Project\171808Z_Bharatmala_Assam_P-4\2.October_2022\New folder\Assam P4 SS\7.Misc\MIS_12_Details_Drainage.dwg

STRUCTURAL DRAWINGS

-: List of Drawings :-

SL. No.	Description	Drawing No.	Rev No.	Sheet No.
01	General Arrangement Drawings of Major Bridge at ch. km. 11+331.000. (3x45)	VSPL/1718-081/DPR/PKG-4/NH-515/SEC-1/MJB-01	R0	02
02	General Arrangement Drawings of Major Bridge at ch. km. 11+933.000.(2x45)	VSPL/1718-081/DPR/PKG-4/NH-515/SEC-1/MJB-02	R0	02
03	General Arrangement Drawings of Major Bridge at ch. km. 19+592 (1x35+1x39.6+1x37.4+2x36)	VSPL/1718-081/DPR/PKG-4/NH-515/SEC-1/MJB-03	R0	02
04	General Arrangement Drawings of Major Bridge at ch. km. 26+939 (1x46.5+9x45.3+1x29.5)	VSPL/1718-081/DPR/PKG-4/NH-515/SEC-1/MJB-04	R0	03
05	General Arrangement Drawings of Single Cell Box Type Minor Bridge (Typical)	VSPL/1718-081/DPR/PKG-4/NH-515/SEC-1/MNB-01	R0	02
06	General Arrangement Drawings of Minor Bridge Three Cell Box.(New Construction)	VSPL/1718-081/DPR/PKG-4/NH-515/SEC-1/MNB-02	R0	02
07	General Arrangement Drawings of Three Cell Box Type Minor Bridge (Retained + New)	VSPL/1718-081/DPR/PKG-4/NH-515/SEC-1/MNB-03	R0	02
08	General Arrangement Drawings of Minor Girder Bridge (Retained + New)	VSPL/1718-081/DPR/PKG-4/NH-515/SEC-1/MNB-04	R0	01
09	General Arrangement Drawings of Box Culvert (Retained + New)	VSPL/1718-081/DPR/PKG-4/NH-515/SEC-1/BC-01.	R0	03
10	General Arrangement Drawings of Vehicular Underpass at Km. Ch. 3+600.00	VSPL/1718-081/DPR/PKG-4/NH-515/SEC-1/VUP-01	R0	02

CLIENT :

NATIONAL HIGHWAYS AND INFRASTRUCTURE DEVELOPMENT CORPORATION LTD. (MINISTRY OF ROAD TRANSPORT AND HIGHWAYS) GOVERNMENT OF INDIA

PROJECT :

CONSULTANCY SERVICES FOR PREPARATION OF DETAILED PROJECT REPORT FOR DEVELOPMENT OF ECONOMIC CORRIDORS, INTER CORRIDORS AND FEEDER ROUTES TO IMPROVE THE EFFICIENCY OF FREIGHT MOVEMENTS IN INDIA UNDER BHARATMALA PARIYOJANA (LOT-1:PACKAGE IV)

DESIGN CONSULTANT:

VOYANTS SOLUTIONS PVT LTD.
403, 4th Floor, Park Centra,
Sector-30, NH-8
Gurugram-122001, Haryana, India
CIN- U74140HR2004PTC046918
Ph: 0124-4598200, Fax: 0124-4019051,
E-mail: info@voyants.in, www.voyants.in

Detaild Project Report

REV.	DATE	DESCRIPTION

DESIGNED BY	DRAWN BY	CHECKED BY	APPROVED BY
SB	G. Das	SG	SKC

SCALE :	AS SHOWN	SHEET SIZE	A2

TITLE :

LIST OF DRAWING

DRG. No. : VSPL/1718-082/DPR/PKG-4/SEC-1/LOD-01

REVISION:	R0	October, 2022

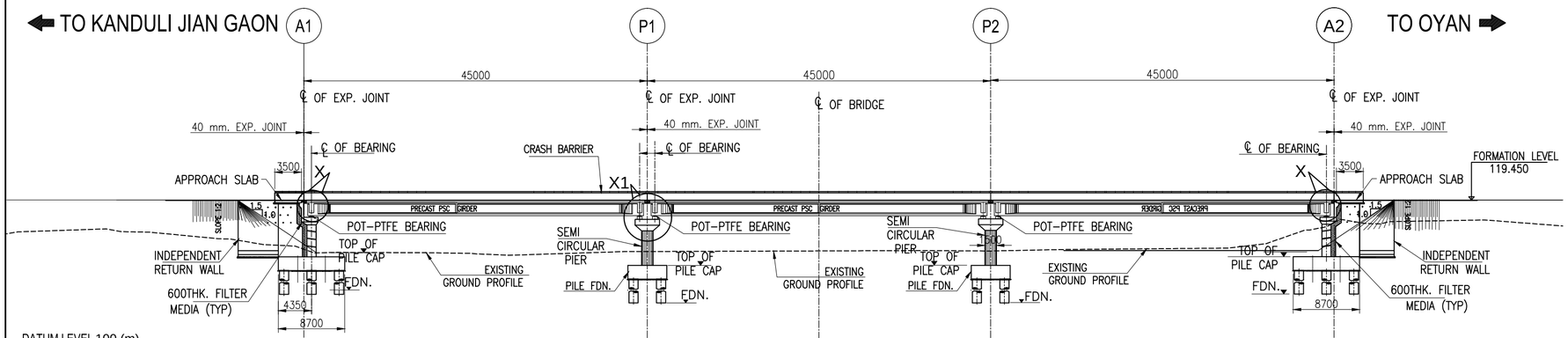

DATUM LEVEL 100 (m)

PROPOSED RME PROFILE LEVEL (m)	119.450	119.450		119.450	119.450		119.450	119.450		119.450	119.450		119.450	119.450
EXISTING GROUND LEVEL RME (m)	114.595	112.550		112.561	112.517			112.757		112.757	112.791	112.791	113.067	116.810	116.810
CHAINAGE (m)	11+250	11+263.500		11+275	11+300		11+308.500	11+325		11+331	11+350	11+353.500	11+375	11+398.500	11+400

SECTIONAL ELEVATION

(SCALE 1:500)

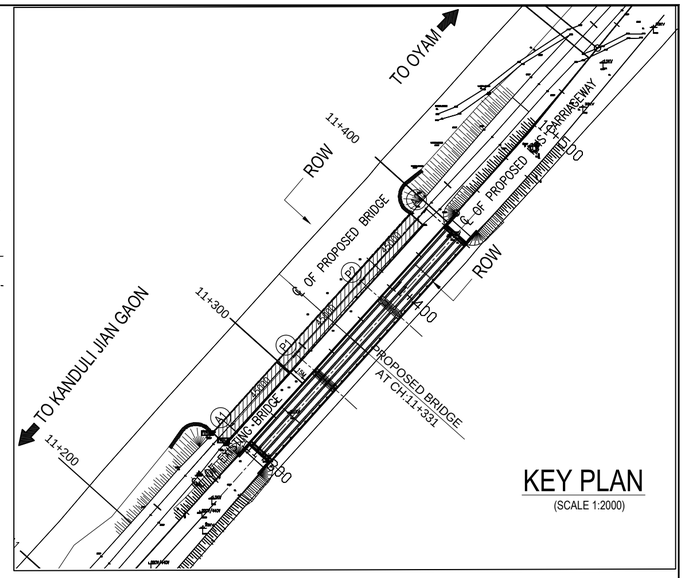

KEY PLAN

(SCALE 1:2000)

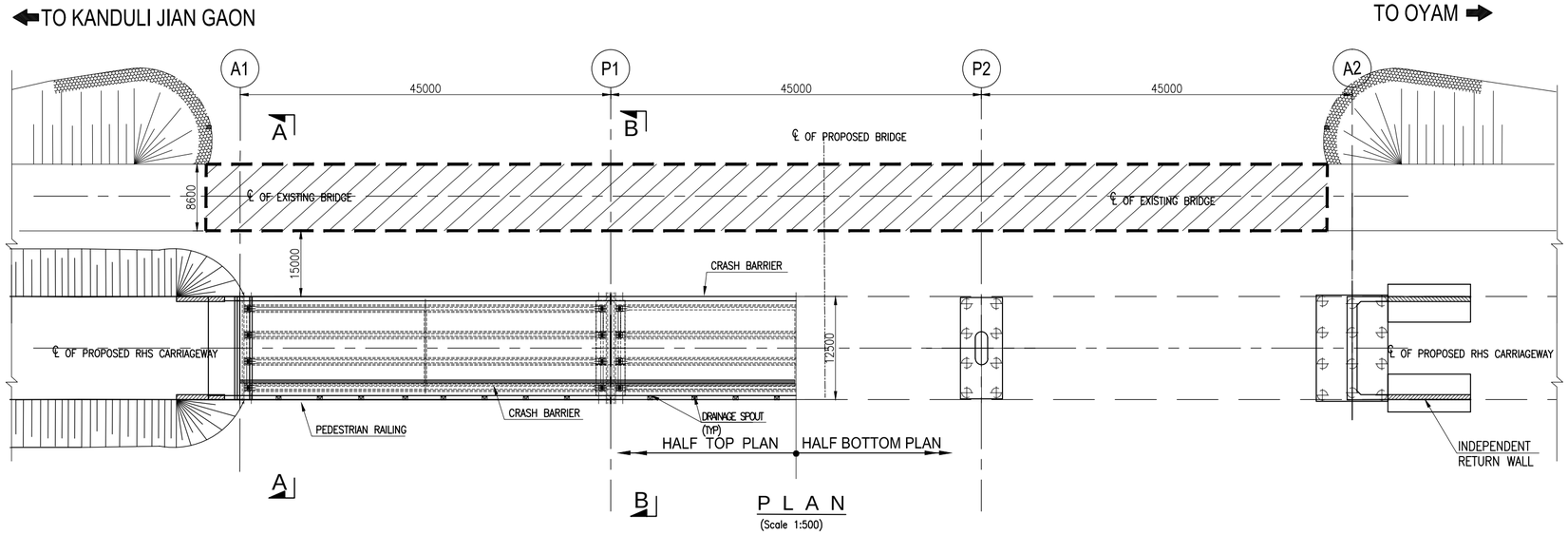

P L A N

(Scale 1:500)

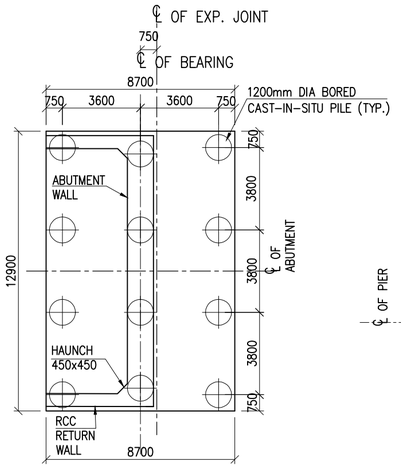

TYPICAL PILECAP DETAIL FOR ABUTMENT

(SCALE 1:200)

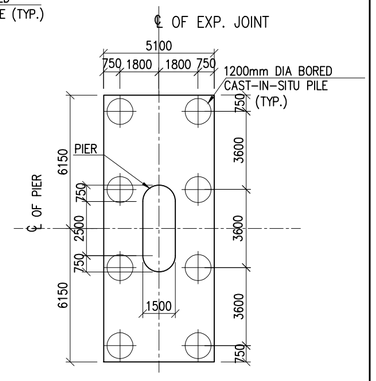

TYPICAL PILECAP DETAIL FOR PIER

(SCALE 1:200)

NOTES:-

FOR NOTE DETAILS REFER DWG NO:
VSPL/1718-081/DPR/PKG-4/NH-515/SEC-1/MJB-01 (Sht. 2 of 2)

CLIENT : NATIONAL HIGHWAYS AND INFRASTRUCTURE DEVELOPMENT CORPORATION LTD. (MINISTRY OF ROAD TRANSPORT AND HIGHWAYS) GOVERNMENT OF INDIA	PROJECT : CONSULTANCY SERVICES FOR PREPARATION OF DETAILED PROJECT REPORT FOR DEVELOPMENT OF ECONOMIC CORRIDORS, INTER CORRIDORS AND FEEDER ROUTES TO IMPROVE THE EFFICIENCY OF FREIGHT MOVEMENTS IN INDIA UNDER BHARATMALA PARIYOJANA (LOT-1:PACKAGE II)	DESIGN CONSULTANT: VOYANTS SOLUTIONS PVT LTD. 403, 4th Floor, Park Centra, Sector-30, NH-8 Gurugram-122001, Haryana, India CIN- U74140HR2004PTC046918 Ph: 0124-4598200, Fax: 0124-4019051, E-mail: info@voyants.in, www.voyants.in	Detailed Project Report	DESIGNED BY: SLM; DRAWN BY: G.Das; CHECKED BY: MK; APPROVED BY: SKC	TITLE : GENERAL ARRANGEMENT DRAWING OF MAJOR BRIDGE AT CH. km. 11+331 (3x45)	
			REV. / DATE / DESCRIPTION	SCALE : AS SHOWN; SHEET SIZE: A2	DRG. No. : VSPL/1718-081/DPR/PKG-4/NH-515/SEC-1/MJB-01 (Sht. 1 of 2)	
					REVISION: R0	October, 2022

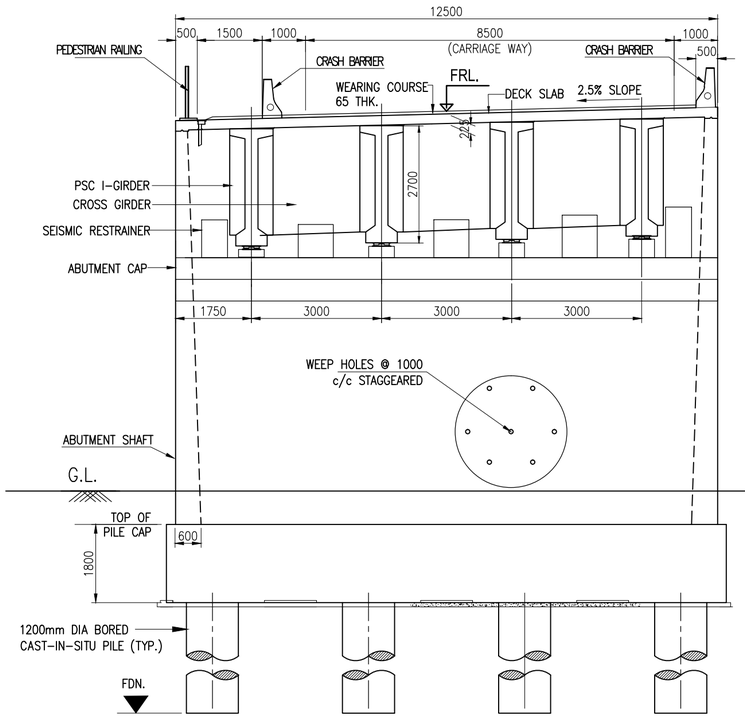

SECTION A - A
(SCALE 1:100)

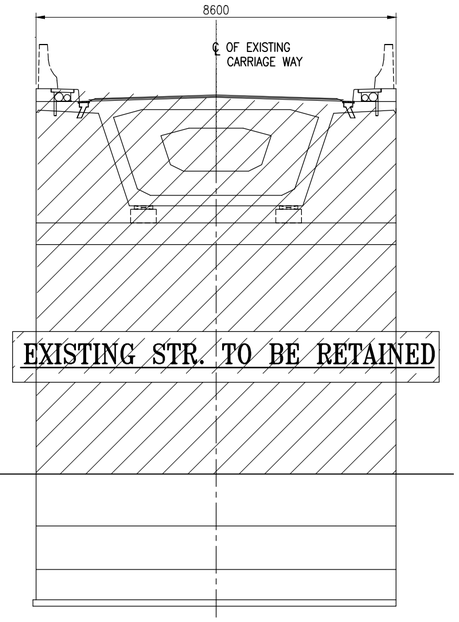

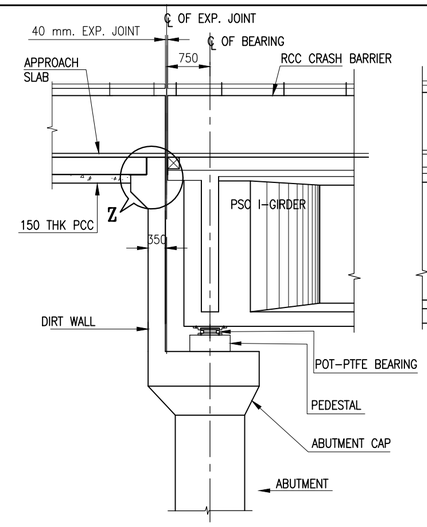

DETAILS - X
(SCALE 1:75)

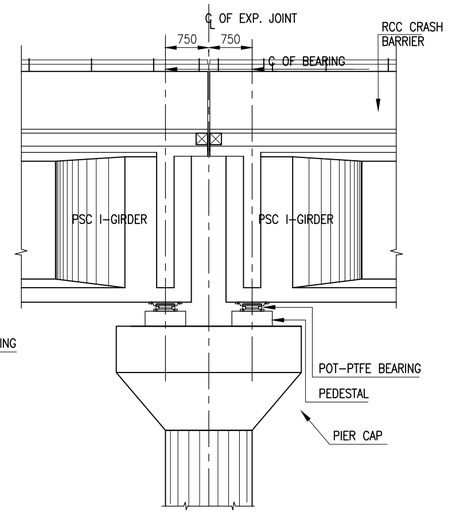

DETAILS - X1
(SCALE 1:75)

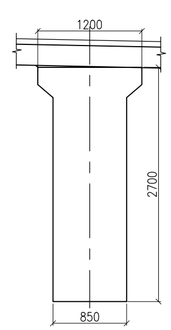

PSC GIRDER AT SUPPORT SECTION FOR 45.0m SPAN
(SCALE 1:50)

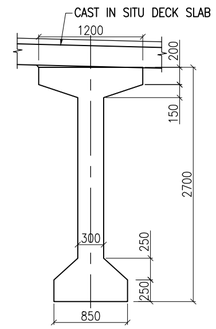

PSC GIRDER AT MID SECTION FOR 45.0 m SPAN
(SCALE 1:50)

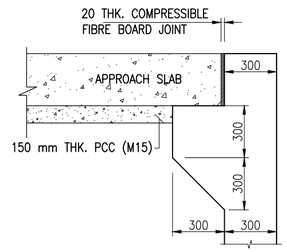

DETAILS - Z
(SCALE 1:25)

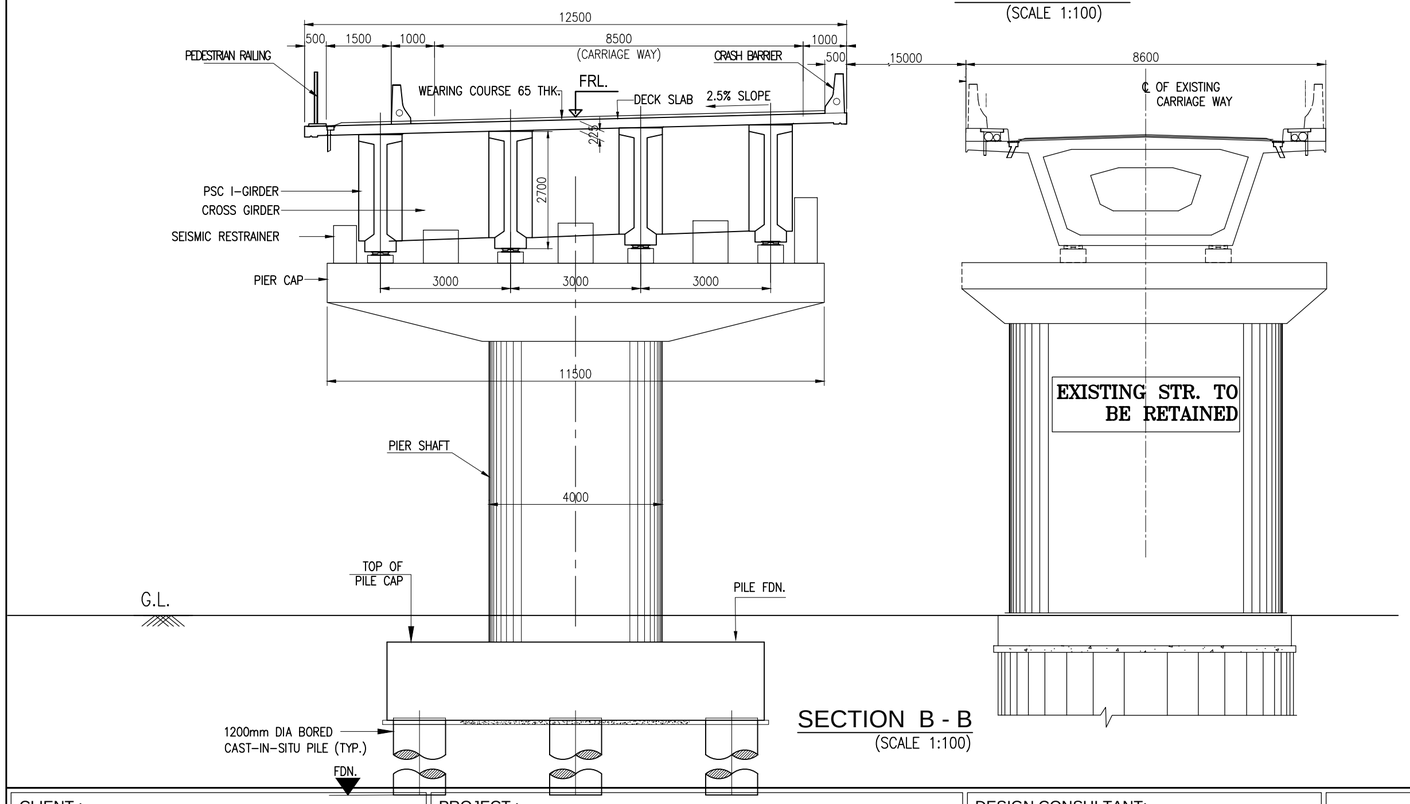

SECTION B - B
(SCALE 1:100)

NOTES:

1. ALL DIMENSIONS ARE IN MILLIMETRES AND LEVELS ARE IN METRES. UNLESS OTHERWISE SPECIFIED.
2. DIMENSIONS ARE NOT TO BE SCALED. ONLY WRITTEN DIMENSIONS SHALL BE FOLLOWED.
3. EXPANSION JOINTS SHALL BE OF STRIP SEAL TYPE AS PER SPECIFICATION.
4. POT PTFE BEARING SHALL BE USED.
5. GRADE OF CONCRETE :-
   - PSC I-GIRDER — M45
   - RCC CRASH BARRIER — M40
   - ABUTMENT, ABUTMENT CAP — M35
   - PIER, PIER CAP — M35
   - PILE/PILE CAP — M35
   - APPROACH SLAB — M30
   - PCC LEVELING COURSE — M15
6. HIGH STRENGTH DEFORMED BARS SHALL BE OF GRADE Fe500 CONFORMING TO IS: 1786-1985.
7. EXPANSION JOINT SHALL BE OF STRIP SEAL TYPE AS PER SPECIFICATION.
8. DESIGN OF BRIDGE IS BASED ON LIVE LOAD COMBINATION OF 3-LANES OF CLASS A OR 70R + CLASS A OR SV WHICHEVER PRODUCE SEVER EFFECT.
9. LAYING, COMPACTION & EXTENT OF BACKFILL BEHIND ABUTMENT & RETAINING WALLS SHALL CONSIST OF SELECTED EARTH CONFIRMING TO THE APPENDIX-6 OF IRC:78-2014 HAVING PROPERTIES C=0, ø=≥30° & DENSITY=20KN/m.
10. WEEP HOLES ON THE ABUTMENT & RETAINING WALLS SHALL BE SPACED 1000 c/c HORIZANTALY & VERTICALLY IN STAGGERED MANNER FROM 500MM ABOVE LWL TO HFL.

CLIENT :

NATIONAL HIGHWAYS AND INFRASTRUCTURE DEVELOPMENT CORPORATION LTD.
(MINISTRY OF ROAD TRANSPORT AND HIGHWAYS)
GOVERNMENT OF INDIA

PROJECT :

CONSULTANCY SERVICES FOR PREPARATION OF DETAILED PROJECT REPORT FOR DEVELOPMENT OF ECONOMIC CORRIDORS, INTER CORRIDORS AND FEEDER ROUTES TO IMPROVE THE EFFICIENCY OF FREIGHT MOVEMENTS IN INDIA UNDER BHARATMALA PARIYOJANA (LOT-1:PACKAGE II)

DESIGN CONSULTANT:

VOYANTS SOLUTIONS PVT LTD.
403, 4th Floor, Park Centra,
Sector-30, NH-8
Gurugram-122001, Haryana, India
CIN- U74140HR2004PTC046918
Ph: 0124-4598200, Fax: 0124-4019051,
E-mail: info@voyants.in, www.voyants.in

Detailed Project Report

REV.	DATE	DESCRIPTION

DESIGNED BY	DRAWN BY	CHECKED BY	APPROVED BY
SLM	G.Das	MK	SKC
SCALE :	AS SHOWN	SHEET SIZE	A2

TITLE :
GENERAL ARRANGEMENT DRAWING OF MAJOR BRIDGE AT CH. km. 11+331 (3x45)

DRG. No. :
VSPL/1718-081/DPR/PKG-4/NH-515/SEC-1/MJB-01 (Sht. 2 of 2)

REVISION: R0 October, 2022

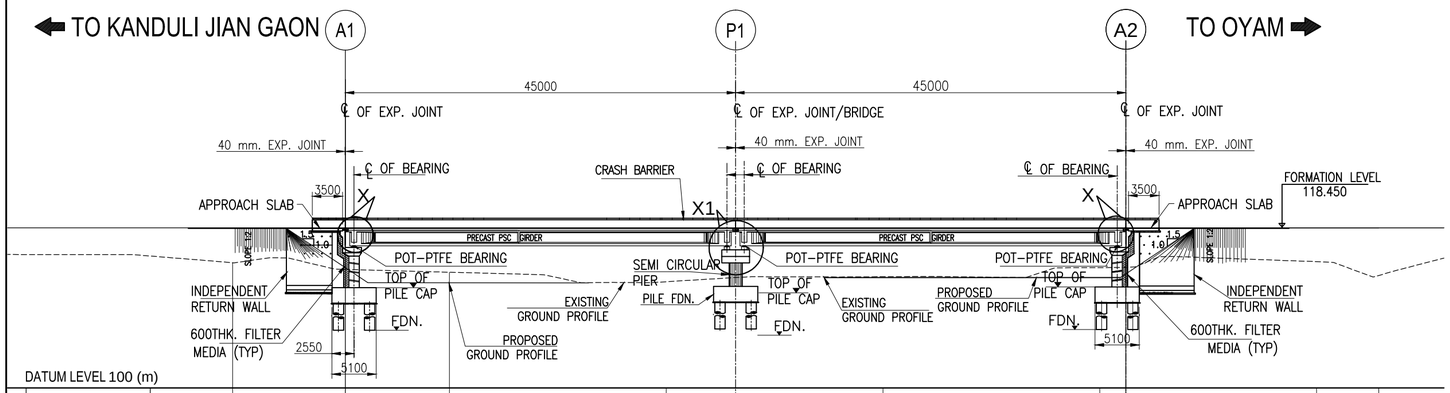

DATUM LEVEL 100 (m)

PROPOSED RME PROFILE LEVEL (m)	118.449	118.450	118.450	118.450	118.450	118.450	118.450	118.450	118.450
EXISTING GROUND LEVEL RME (m)	114.434	114.434	113.335	112.237	112.237	112.817	113.865	113.865	114.554
CHAINAGE (m)	11+875.000	11+888.000	11+900.000	11+925.000	11+933.000	11+950.000	11+975.000	11+978.000	12+000.000

SECTIONAL ELEVATION

(SCALE 1:500)

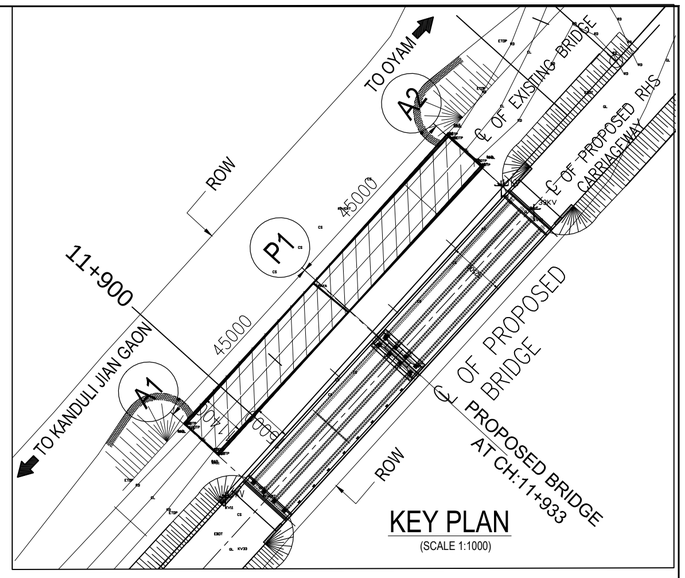

KEY PLAN

(SCALE 1:1000)

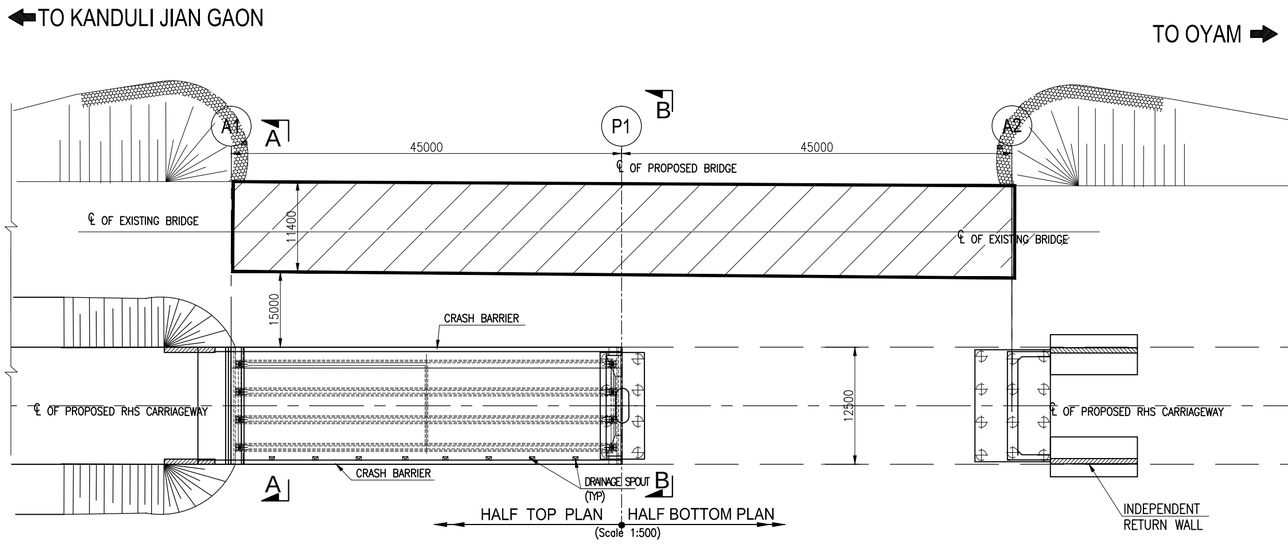

P L A N

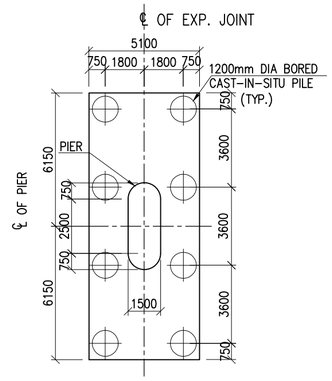

TYPICAL PILECAP DETAIL FOR PIER

(SCALE 1:200)

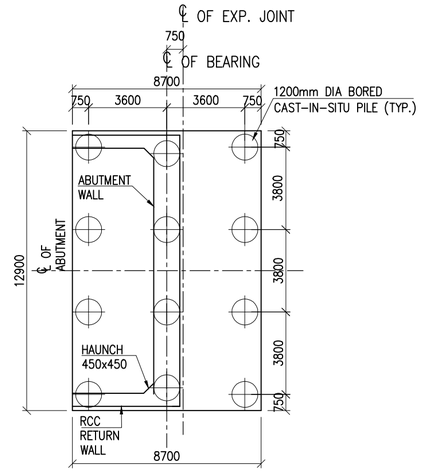

TYPICAL PILECAP DETAIL FOR ABUTMENT

(SCALE 1:200)

NOTES:-

FOR NOTE DETAILS REFER DWG NO:
VSPL/1718-081/DPR/PKG-4/NH-515/SEC-1/MJB-02 (Sht. 2 of 2)

CLIENT :	PROJECT :	DESIGN CONSULTANT:	Detailed Project Report	DESIGNED BY	DRAWN BY	CHECKED BY	APPROVED BY	TITLE :
NATIONAL HIGHWAYS AND INFRASTRUCTURE DEVELOPMENT CORPORATION LTD. (MINISTRY OF ROAD TRANSPORT AND HIGHWAYS) GOVERNMENT OF INDIA	CONSULTANCY SERVICES FOR PREPARATION OF DETAILED PROJECT REPORT FOR DEVELOPMENT OF ECONOMIC CORRIDORS, INTER CORRIDORS AND FEEDER ROUTES TO IMPROVE THE EFFICIENCY OF FREIGHT MOVEMENTS IN INDIA UNDER BHARATMALA PARIYOJANA (LOT-1:PACKAGE II)	VOYANTS SOLUTIONS PVT LTD. 403, 4th Floor, Park Centra, Sector-30, NH-8 Gurugram-122001, Haryana, India CIN- U74140HR2004PTC046918 Ph: 0124-4598200, Fax: 0124-4019051, E-mail: info@voyants.in, www.voyants.in	REV. DATE DESCRIPTION	SLM	G.Das	MK	SKC	GENERAL ARRANGEMENT DRAWING OF MAJOR BRIDGE AT CH. km. 11+933 (2x45)
				SCALE : AS SHOWN		SHEET SIZE	A2	DRG. No. : VSPL/1718-081/DPR/PKG-4/NH-515/SEC-1/MJB-02 (Sht. 1 of 2)
								REVISION: R0 October, 2022

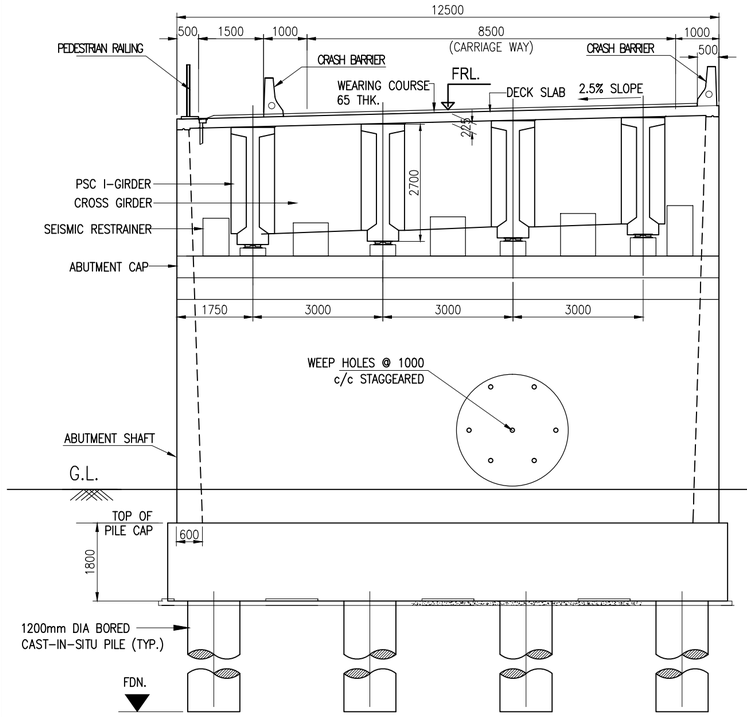

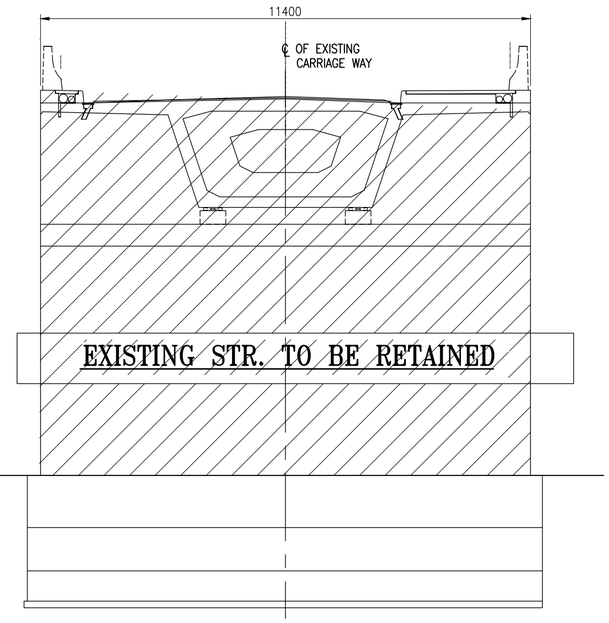

SECTION A - A
(SCALE 1:100)

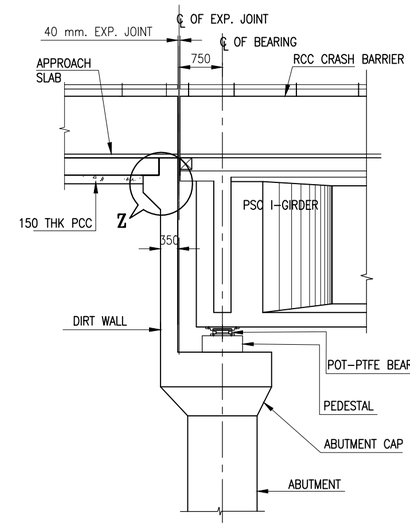

DETAILS - X
(SCALE 1:75)

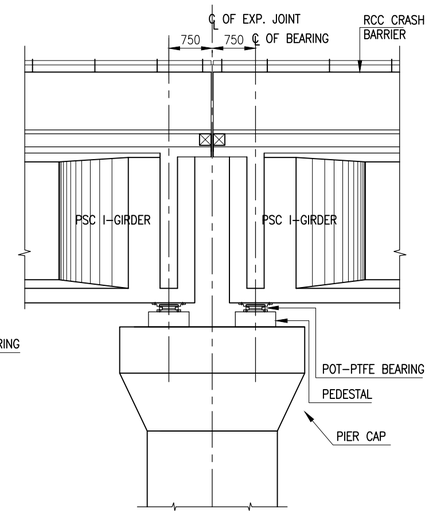

DETAILS - X1
(SCALE 1:75)

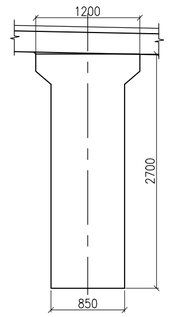

PSC GIRDER AT
SUPPORT SECTION
FOR 45.0m SPAN
(SCALE 1:50)

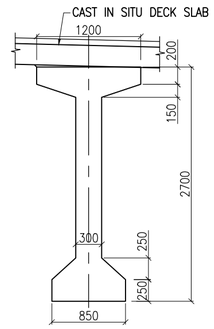

PSC GIRDER AT
MID SECTION FOR
45.0 m SPAN
(SCALE 1:50)

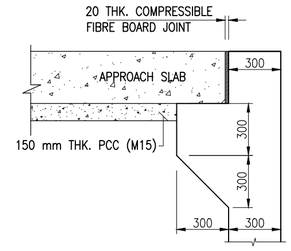

DETAILS - Z
(SCALE 1:25)

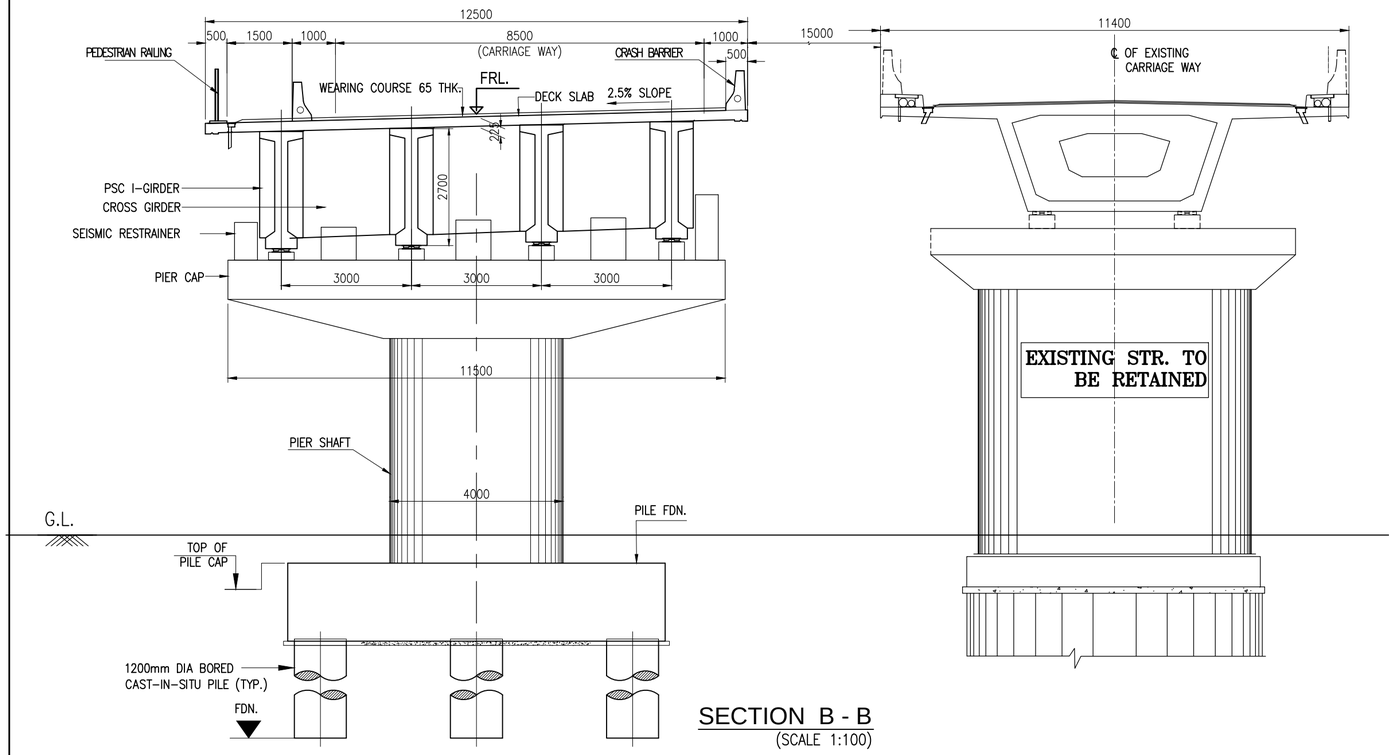

SECTION B - B
(SCALE 1:100)

NOTES:

1. ALL DIMENSIONS ARE IN MILLIMETRES AND LEVELS ARE IN METRES. UNLESS OTHERWISE SPECIFIED.
2. DIMENSIONS ARE NOT TO BE SCALED. ONLY WRITTEN DIMENSIONS SHALL BE FOLLOWED.
3. EXPANSION JOINTS SHALL BE OF STRIP SEAL TYPE AS PER SPECIFICATION.
4. POT PTFE BEARING SHALL BE USED.
5. GRADE OF CONCRETE :-
   - PSC I-GIRDER ——— M45
   - RCC CRASH BARRIER ——— M40
   - ABUTMENT, ABUTMENT CAP ——— M35
   - PIER, PIER CAP ——— M35
   - PILE,PILE CAP ——— M35
   - APPROACH SLAB ——— M30
   - PCC LEVELING COURSE ——— M15
   - HIGH STRENGTH DEFORMED BARS SHALL BE OF GRADE Fe500 CONFORMING TO IS: 1786-1985.
6. EXPANSION JOINT SHALL BE OF STRIP SEAL TYPE AS PER SPECIFICATION.
8. DESIGN OF BRIDGE IS BASED ON LIVE LOAD COMBINATION OF 3-LANES OF CLASS A OR 70R + CLASS A OR SV WHICHEVER PRODUCE SEVER EFFECT.
9. LAYING, COMPACTION & EXTENT OF BACKFILL BEHIND ABUTMENT & RETAINING WALLS SHALL CONSIST OF SELECTED EARTH CONFIRMING TO THE APPENDIX-6 OF IRC:78-2014 HAVING PROPERTIES C=0, ø=⩾30° & DENSITY=20KN/m.
10. WEEP HOLES ON THE ABUTMENT & RETAINING WALLS SHALL BE SPACED 1000 c/c HORIZANTALY & VERTICALLY IN STAGGERED MANNER FROM 500MM ABOVE LWL TO HFL.
11. THIS DRAWING SHALL BE READ IN CONJUNCTION WITH DRG. No. VSPL/1718-081/DPR/PKG-4/NH-515/SEC-1/MJB-02 (Sht. 1 of 2)

CLIENT :	PROJECT :	DESIGN CONSULTANT:	Detailed Project Report	DESIGNED BY	DRAWN BY	CHECKED BY	APPROVED BY	TITLE :
NATIONAL HIGHWAYS AND INFRASTRUCTURE DEVELOPMENT CORPORATION LTD. (MINISTRY OF ROAD TRANSPORT AND HIGHWAYS) GOVERNMENT OF INDIA	CONSULTANCY SERVICES FOR PREPARATION OF DETAILED PROJECT REPORT FOR DEVELOPMENT OF ECONOMIC CORRIDORS, INTER CORRIDORS AND FEEDER ROUTES TO IMPROVE THE EFFICIENCY OF FREIGHT MOVEMENTS IN INDIA UNDER BHARATMALA PARIYOJANA (LOT-1:PACKAGE II)	VOYANTS SOLUTIONS PVT LTD. 403, 4th Floor, Park Centra, Sector-30, NH-8 Gurugram-122001, Haryana, India CIN- U74140HR2004PTC046918 Ph: 0124-4598200, Fax: 0124-4019051, E-mail: info@voyants.in, www.voyants.in		SLM	G.Das	MK	SKC	GENERAL ARRANGEMENT DRAWING OF MAJOR BRIDGE AT CH. km. 11+933 (2x45)
				SCALE : AS SHOWN		SHEET SIZE	A2	DRG. No. : VSPL/1718-081/DPR/PKG-4/NH-515/SEC-1/MJB-02 (Sht. 2 of 2)
			REV. DATE DESCRIPTION					REVISION: R0 October, 2022

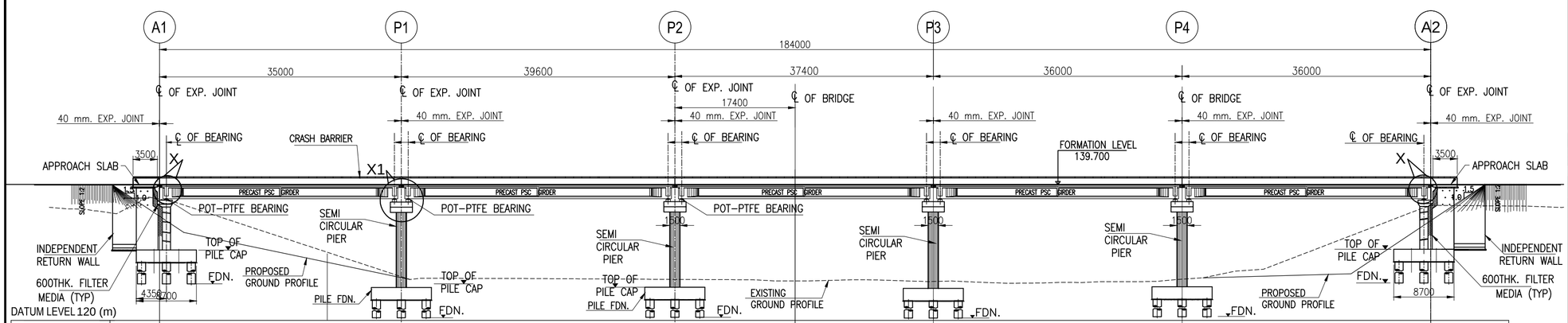

PROPOSED RME PROFILE LEVEL (m)	139.700	139.700	139.700	139.700	139.700	139.700	139.700
EXISTING GROUND LEVEL RME (m)	137.590	129.673	125.939	125.881	125.398	126.104	136.490
CHAINAGE (m)	19+500.000	19+535.000	19+574.600	19+592.0	19+612.000	19+648.000	19+684.000

SECTIONAL ELEVATION

(SCALE 1:500)

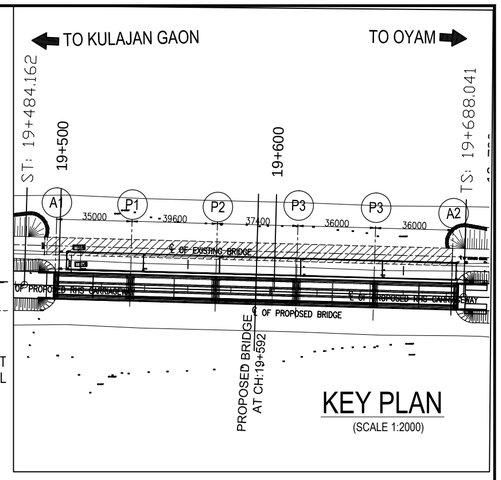

KEY PLAN

(SCALE 1:2000)

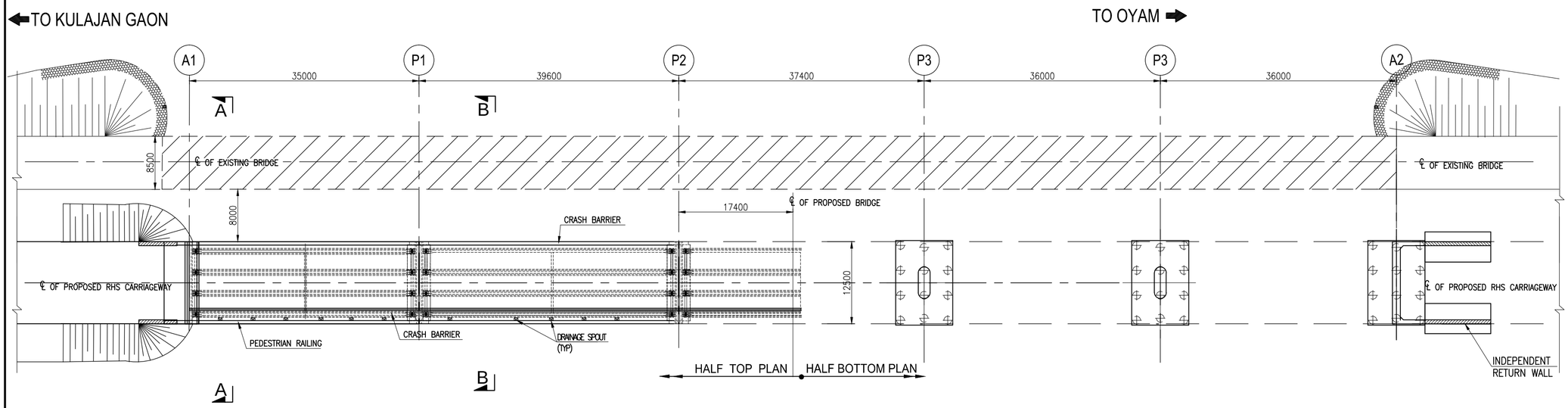

P L A N

(Scale 1:500)

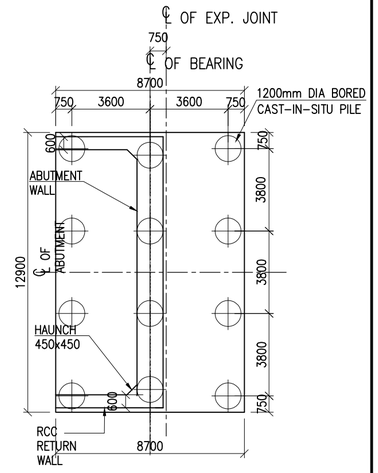

TYPICAL PILECAP DETAIL FOR ABUTMENT

(SCALE 1:200)

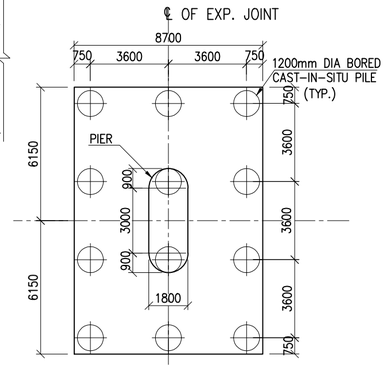

TYPICAL PILECAP DETAIL FOR PIER

(SCALE 1:200)

NOTES:-

FOR NOTE DETAILS REFER DWG NO:
VSPL/1718-081/DPR/PKG-4/NH-515/SEC-1/MJB-03 (Sht. 2 of 2).

REV.	DATE	DESCRIPTION

CLIENT :

NATIONAL HIGHWAYS AUTHORITY OF INDIA
Regional Office, Hyderabad – First Floor, New Building
Administrative Staff college of India (ASCI)
Road No - 3, Banjara Hills, Hyderabad – 500034
Tele: 040-295662147/48, Email: rohyderabad@nhai.org

PROJECT :

Consultancy Services for preparation of DPR for "Augmentation of existing 4 lane Section of NH-44 from Km.22.00 (Near Hyderabad Airport) to Km. 211.00 (Kurnool) to 6 lane Partial Access Controlled Highway in the State of Telangana"

DESIGN CONSULTANT:
VOYANTS SOLUTIONS PVT LTD.
403, 4th Floor, Park Centra,
Sector-30, NH-8
Gurugram-122001, Haryana, India
CIN- U74140HR2004PTC046918
Ph: 0124-4598200, Fax: 0124-4019051,
E-mail: info@voyants.in, www.voyants.in
G-ENG ADVISORY SERVICES PVT. LTD.
Middle Building, Emerald Estate Primary School-01,
Adjacent Worldmark Mall, Sector 65, Gurugram-122018.

DESIGNED BY	DRAWN BY	CHECKED BY	APPROVED BY
SB	GD	MK	SKC
SCALE :- AS SHOWN		SHEET SIZE	A2

TITLE :
GENERAL ARRANGEMENT DRAWING OF MAJOR BRIDGE AT CH. km. 19+592 (1x35+1x39.6+1x37.4+2x36)

DRG. No. :
VSPL/1718-081/DPR/PKG-4/NH-515/SEC-1/MJB-03 (Sht. 1 of 2)

REVISION: R0 November 2022

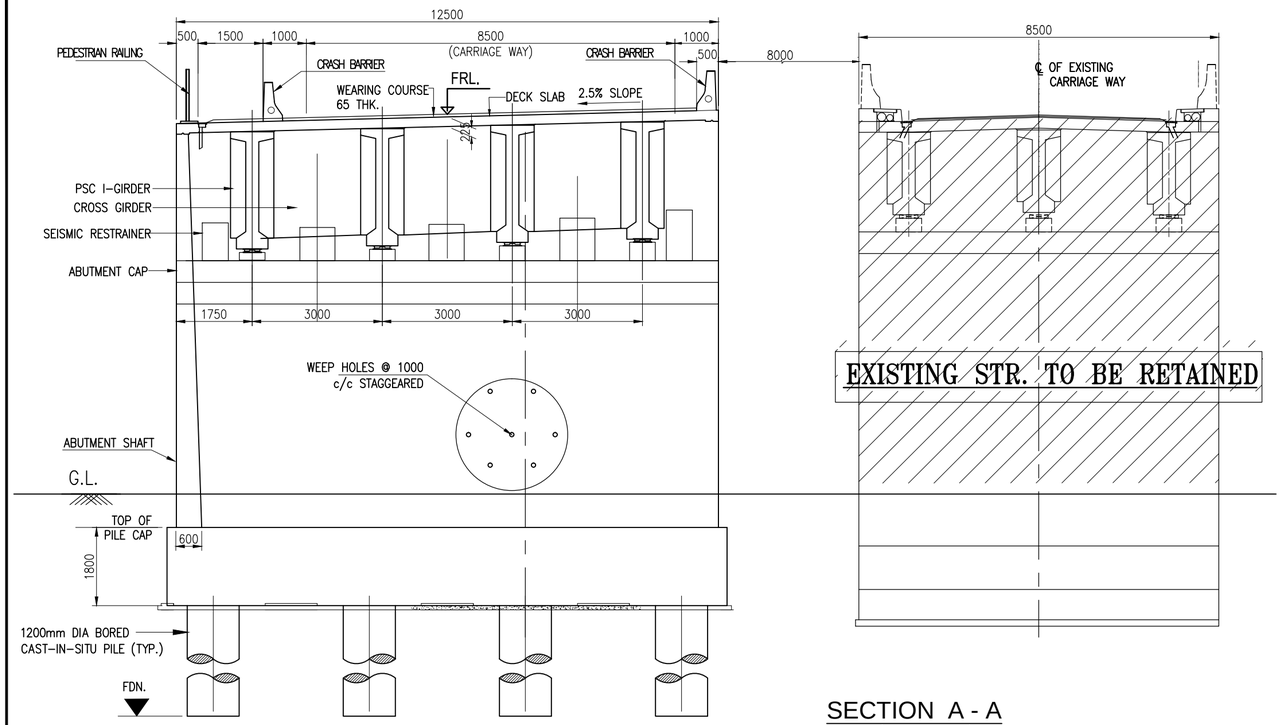

SECTION A - A
(SCALE 1:100)

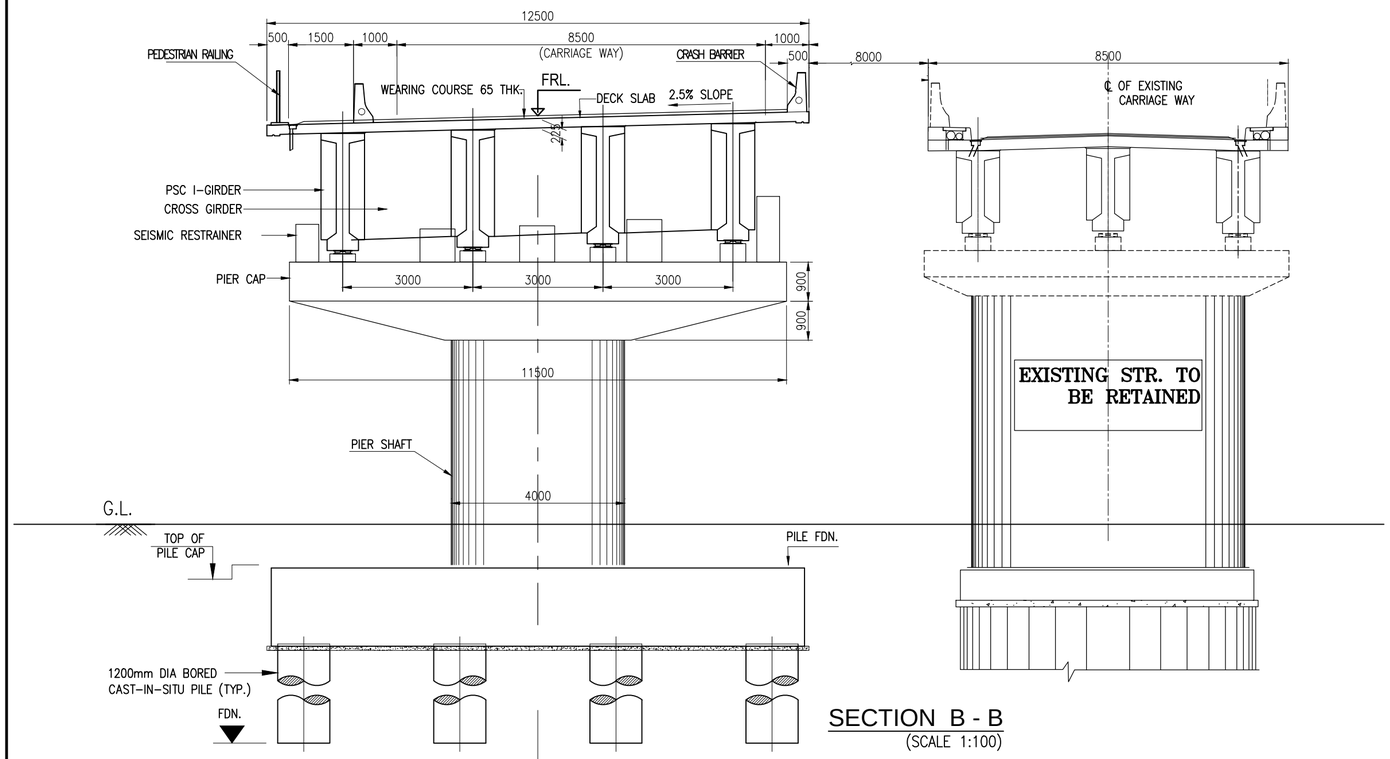

SECTION B - B
(SCALE 1:100)

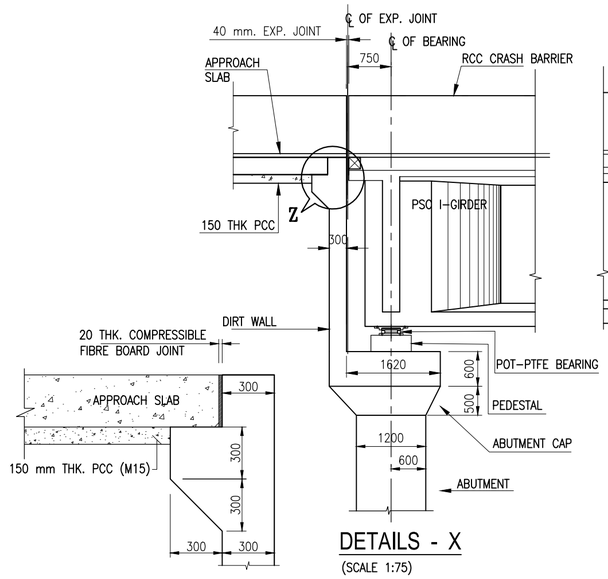

DETAILS - X
(SCALE 1:75)

DETAILS - Z
(SCALE 1:25)

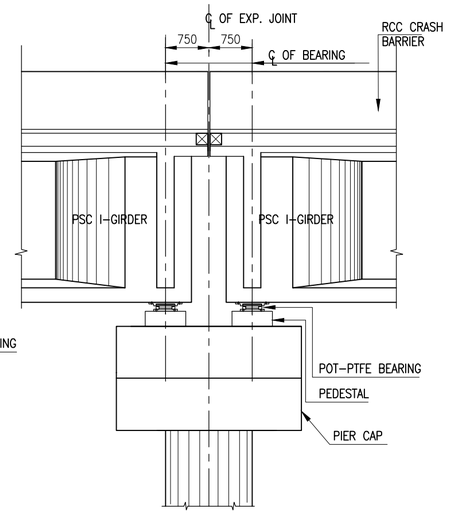

DETAILS - X1
(SCALE 1:75)

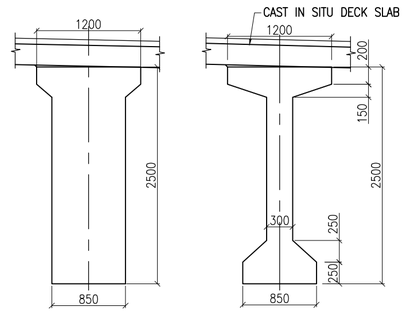

PSC GIRDER AT SUPPORT SECTION FOR 39.6m & 37.4m SPAN
(SCALE 1:50)

PSC GIRDER AT MID SECTION FOR 39.6M & 37.4M SPAN
(SCALE 1:50)

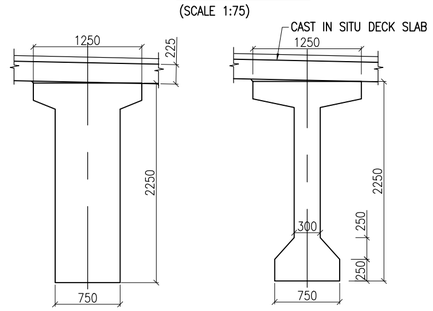

PSC GIRDER AT SUPPORT SECTION FOR 35.00m SPAN
(SCALE 1:50)

PSC GIRDER AT MID SECTION FOR 35.00m SPAN
(SCALE 1:50)

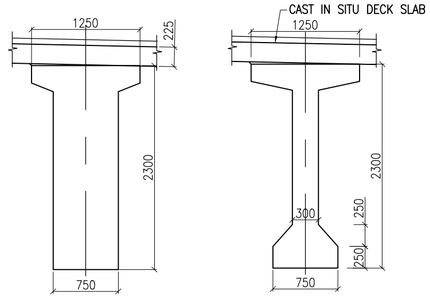

PSC GIRDER AT SUPPORT SECTION FOR 36.00m SPAN
(SCALE 1:50)

PSC GIRDER AT MID SECTION FOR 36.00m SPAN
(SCALE 1:50)

NOTES:

1. ALL DIMENSIONS ARE IN MILLIMETRES AND LEVELS ARE IN METRES. UNLESS OTHERWISE SPECIFIED.
2. DIMENSIONS ARE NOT TO BE SCALED. ONLY WRITTEN DIMENSIONS SHALL BE FOLLOWED.
3. EXPANSION JOINTS SHALL BE OF STRIP SEAL TYPE AS PER SPECIFICATION.
4. POT PTFE BEARING SHALL BE USED.
5. GRADE OF CONCRETE :-
   - PSC I-GIRDER — M50
   - RCC CRASH BARRIER — M40
   - ABUTMENT, ABUTMENT CAP — M40
   - PIER, PIER CAP — M40
   - OPEN FOUNDATION — M40
   - APPROACH SLAB — M30
   - PCC LEVELING COURSE — M15
6. HIGH STRENGTH DEFORMED BARS SHALL BE OF GRADE Fe500 CONFORMING TO IS: 1786-1985.
7. EXPANSION JOINT SHALL BE OF STRIP SEAL TYPE AS PER SPECIFICATION.
8. DESIGN OF BRIDGE IS BASED ON LIVE LOAD COMBINATION OF 3-LANES OF CLASS A OR 70R + CLASS A OR SV WHICHEVER PRODUCE SEVER EFFECT.
9. LAYING, COMPACTION & EXTENT OF BACKFILL BEHIND ABUTMENT & RETAINING WALLS SHALL CONSIST OF SELECTED EARTH CONFIRMING TO THE APPENDIX-6 OF IRC:78-2014 HAVING PROPERTIES C=0, ø=⩾30° & DENSITY=20KN/m.
10. WEEP HOLES ON THE ABUTMENT & RETAINING WALLS SHALL BE SPACED 1000 c/c HORIZANTALY & VERTICALLY IN STAGGERED MANNER FROM 500MM ABOVE LWL TO HFL.
11. THIS DRAWING SHALL BE READ IN CONJUNCTION WITH DRG. No. VSPL/1718-081/DPR/PKG-4/NH-515/SEC-1/MJB-03 (Sht. 1 of 2).

REV.	DATE	DESCRIPTION

CLIENT :
NATIONAL HIGHWAYS AUTHORITY OF INDIA
Regional Office, Hyderabad – First Floor, New Building
Administrative Staff college of India (ASCI)
Road No - 3, Banjara Hills, Hyderabad – 500034
Tele: 040-295662147/48, Email: rohyderabad@nhai.org

PROJECT :
Consultancy Services for preparation of DPR for "Augmentation of existing 4 lane Section of NH-44 from Km.22.00 (Near Hyderabad Airport) to Km. 211.00 (Kurnool) to 6 lane Partial Access Controlled Highway in the State of Telangana"

DESIGN CONSULTANT:
VOYANTS SOLUTIONS PVT LTD.
403, 4th Floor, Park Centra,
Sector-30, NH-8
Gurugram-122001, Haryana, India
CIN- U74140HR2004PTC046918
Ph: 0124-4598200, Fax: 0124-4019051,
E-mail: info@voyants.in, www.voyants.in
G-ENG ADVISORY SERVICES PVT. LTD.
Middle Building, Emerald Estate Primary School-01,
Adjacent Worldmark Mall, Sector 65, Gurugram-122018.

DESIGNED BY	DRAWN BY	CHECKED BY	APPROVED BY
SB	GD	MK	SKC
SCALE :- AS SHOWN		SHEET SIZE	A2

TITLE :
GENERAL ARRANGEMENT DRAWING OF MAJOR BRIDGE AT CH. km. 19+592
(1x35+1x39.6+1x37.4+2x36)

DRG. No. :
VSPL/1718-081/DPR/PKG-4/NH-515/SEC-1/MJB-03 (Sht. 1 of 2)

REVISION: R0 November 2022

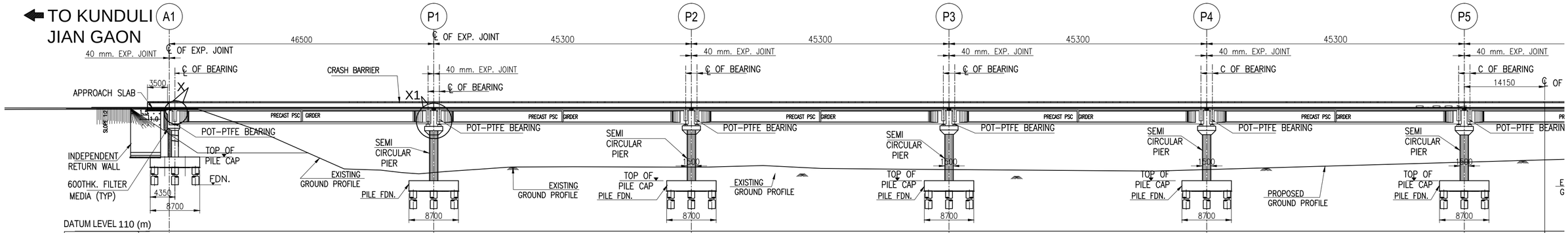

DATUM LEVEL 110 (m)

PROPOSED RME PROFILE LEVEL (m)	131.700	131.700	131.700	131.700	131.700	131.700	131.700
EXISTING GROUND LEVEL RME (m)	131.495	120.804	121.512	120.915	120.715	122.153	122.153
CHAINAGE (m)	26+697.150	26+743.650	26+788.950	26+834.250	26+879.550	26+924.850	26+939

SECTIONAL ELEVATION

(SCALE 1:500)

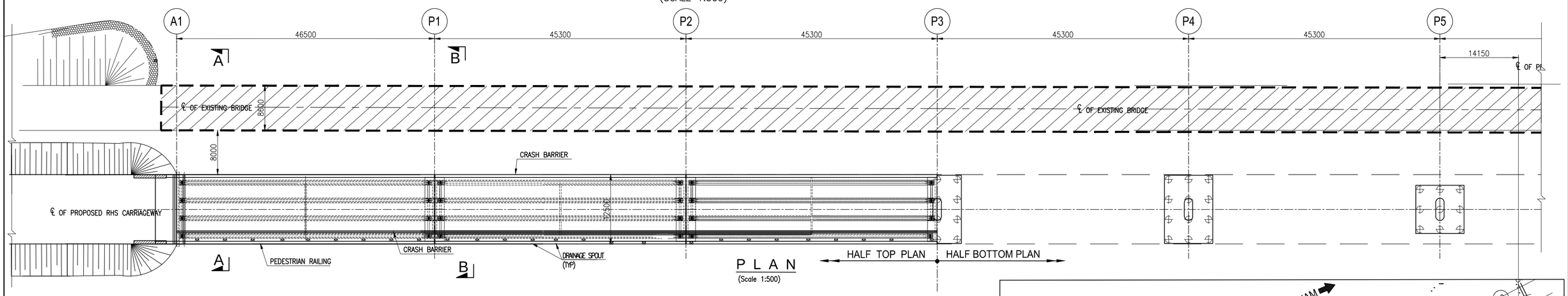

PLAN

(Scale 1:500)

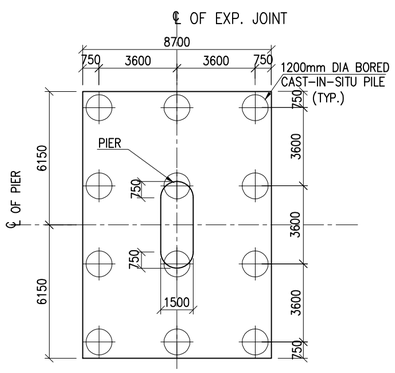

TYPICAL PILECAP DETAIL FOR PIER MKD. P1 TO P4

(SCALE 1:200)

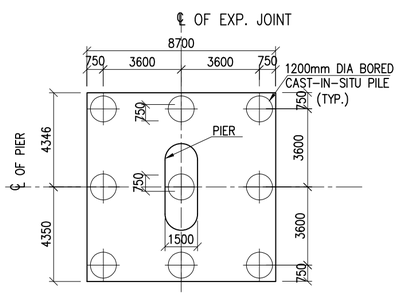

TYPICAL PILECAP DETAIL FOR PIER MKD. P5 TO P10

(SCALE 1:200)

NOTES:-

FOR NOTE DETAILS REFER DWG NO:
VSPL/1718-081/DPR/PKG-4/NH-515/SEC-1/MJB-04 (Sht. 3 of 3)

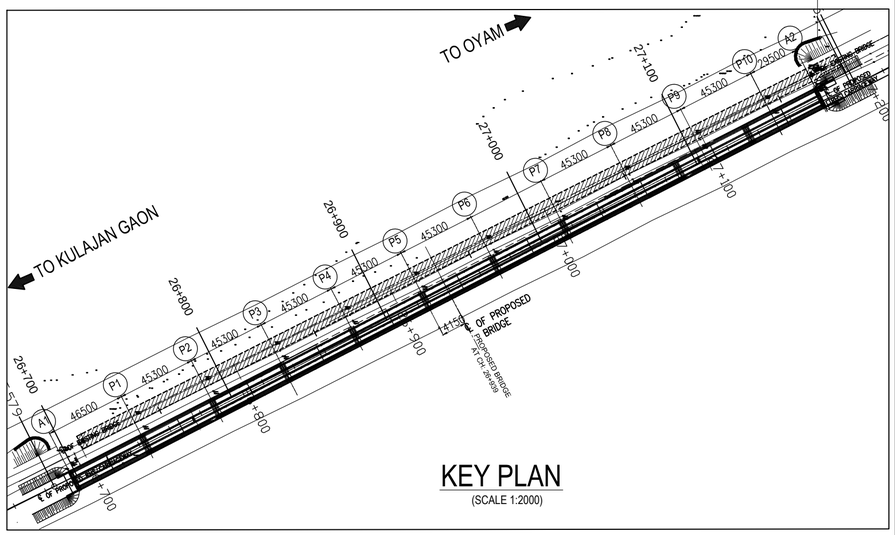

KEY PLAN

(SCALE 1:2000)

CLIENT :	PROJECT :	DESIGN CONSULTANT:
NATIONAL HIGHWAYS AND INFRASTRUCTURE DEVELOPMENT CORPORATION LTD. (MINISTRY OF ROAD TRANSPORT AND HIGHWAYS) GOVERNMENT OF INDIA	CONSULTANCY SERVICES FOR PREPARATION OF DETAILED PROJECT REPORT FOR DEVELOPMENT OF ECONOMIC CORRIDORS, INTER CORRIDORS AND FEEDER ROUTES TO IMPROVE THE EFFICIENCY OF FREIGHT MOVEMENTS IN INDIA UNDER BHARATMALA PARIYOJANA (LOT-1:PACKAGE II)	VOYANTS SOLUTIONS PVT LTD. 403, 4th Floor, Park Centra, Sector-30, NH-8 Gurugram-122001, Haryana, India CIN- U74140HR2004PTC046918 Ph: 0124-4598200, Fax: 0124-4019051, E-mail: info@voyants.in, www.voyants.in

Detailed Project Report

REV.	DATE	DESCRIPTION

DESIGNED BY	DRAWN BY	CHECKED BY	APPROVED BY
SLM	G.Das	MK	SKC
SCALE :	AS SHOWN	SHEET SIZE	A2

TITLE : GENERAL ARRANGEMENT DRAWING OF MAJOR BRIDGE AT CH. km. 26+939 (1x46.5+9x45.3+1x29.5)

DRG. No. : VSPL/1718-081/DPR/PKG-4/NH-515/SEC-1/MJB-04. (Sht. 1 of 3)

REVISION: R0 October, 2022

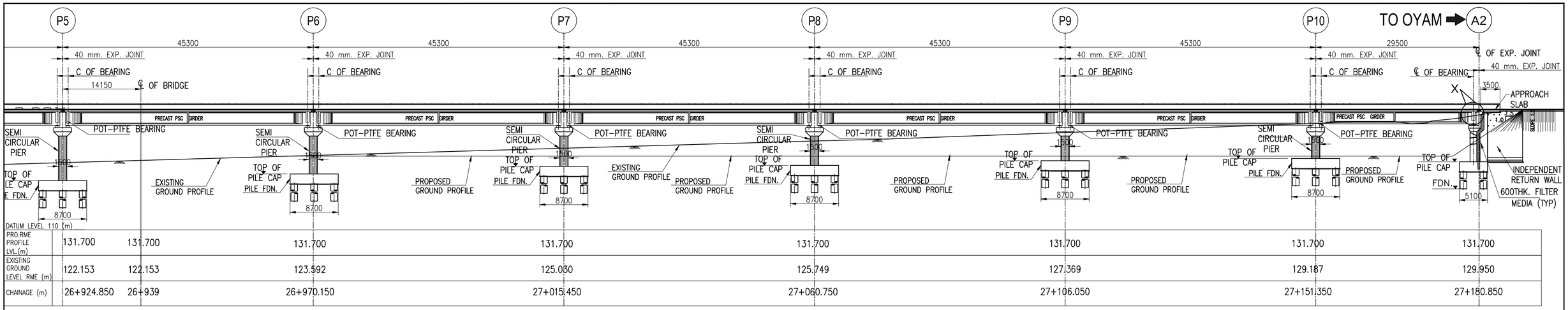

SECTIONAL ELEVATION

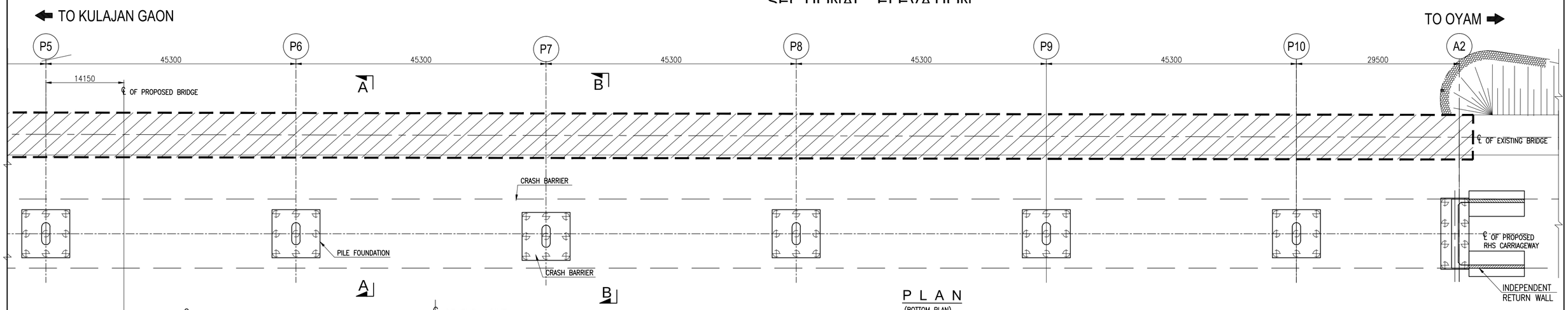

PLAN
(BOTTOM PLAN)
(Scale 1:500)

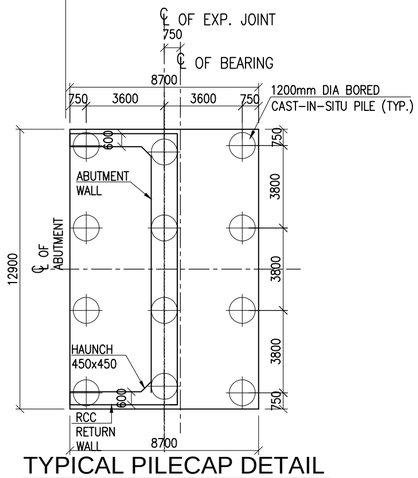

TYPICAL PILECAP DETAIL FOR ABUTMENT MKD, A1
(SCALE 1:200)

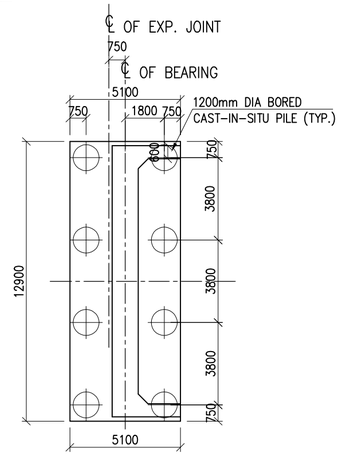

TYPICAL PILECAP DETAIL FOR ABUTMENT MKD, A2
(SCALE 1:200)

NOTES:-

FOR NOTE DETAILS REFER DWG NO:
VSPL/1718-081/DPR/PKG-4/NH-515/SEC-1/MJB-04 (Sht. 3 of 3)

CLIENT :	PROJECT :	DESIGN CONSULTANT:	Detailed Project Report	DESIGNED BY	DRAWN BY	CHECKED BY	APPROVED BY	TITLE :
NATIONAL HIGHWAYS AND INFRASTRUCTURE DEVELOPMENT CORPORATION LTD. (MINISTRY OF ROAD TRANSPORT AND HIGHWAYS) GOVERNMENT OF INDIA	CONSULTANCY SERVICES FOR PREPARATION OF DETAILED PROJECT REPORT FOR DEVELOPMENT OF ECONOMIC CORRIDORS, INTER CORRIDORS AND FEEDER ROUTES TO IMPROVE THE EFFICIENCY OF FREIGHT MOVEMENTS IN INDIA UNDER BHARATMALA PARIYOJANA (LOT-1:PACKAGE II)	VOYANTS SOLUTIONS PVT LTD. 403, 4th Floor, Park Centra, Sector-30, NH-8 Gurugram-122001, Haryana, India CIN- U74140HR2004PTC046918 Ph: 0124-4598200, Fax: 0124-4019051, E-mail: info@voyants.in, www.voyants.in	REV. DATE DESCRIPTION	SLM	G.Das	MK	SKC	GENERAL ARRANGEMENT DRAWING OF MAJOR BRIDGE AT CH. km. 26+939 (1x46.5+9x45.3+1x29.5)
				SCALE : AS SHOWN	SHEET SIZE A2			DRG. No. : VSPL/1718-081/DPR/PKG-4/NH-515/SEC-1/MJB-04. (Sht. 2 of 3)
								REVISION: R0 October, 2022

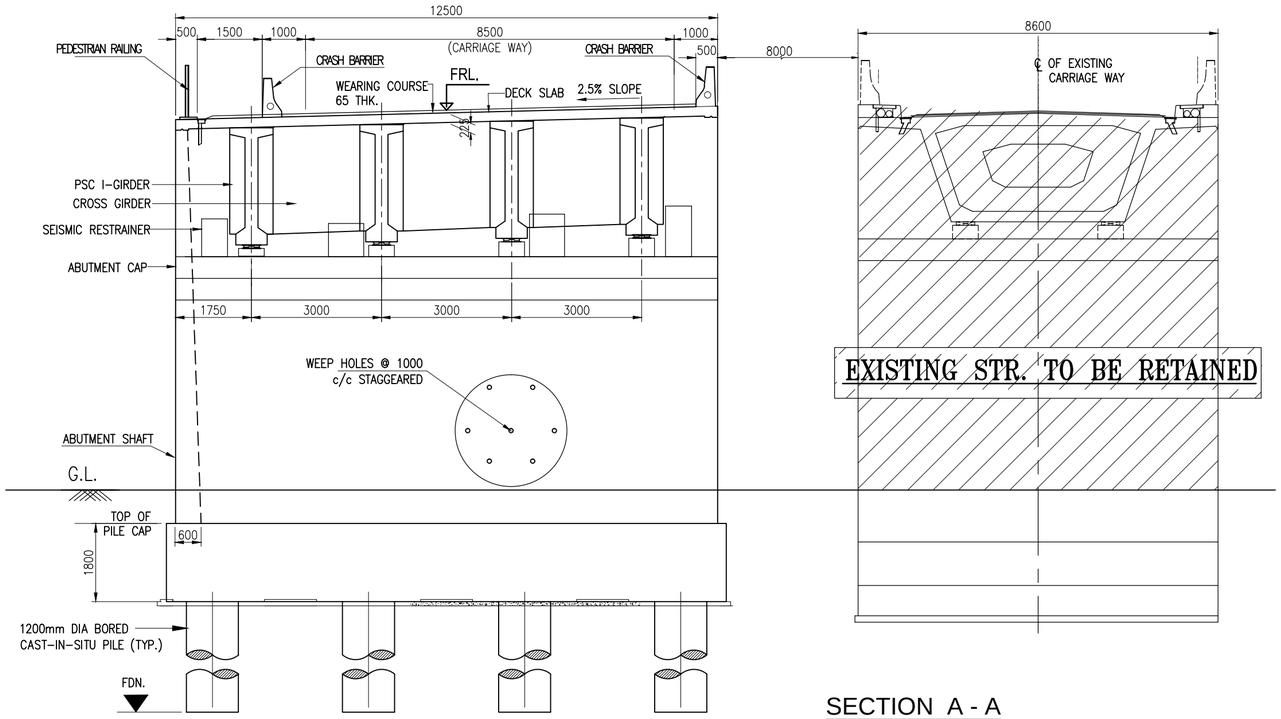

SECTION A - A
(SCALE 1:100)

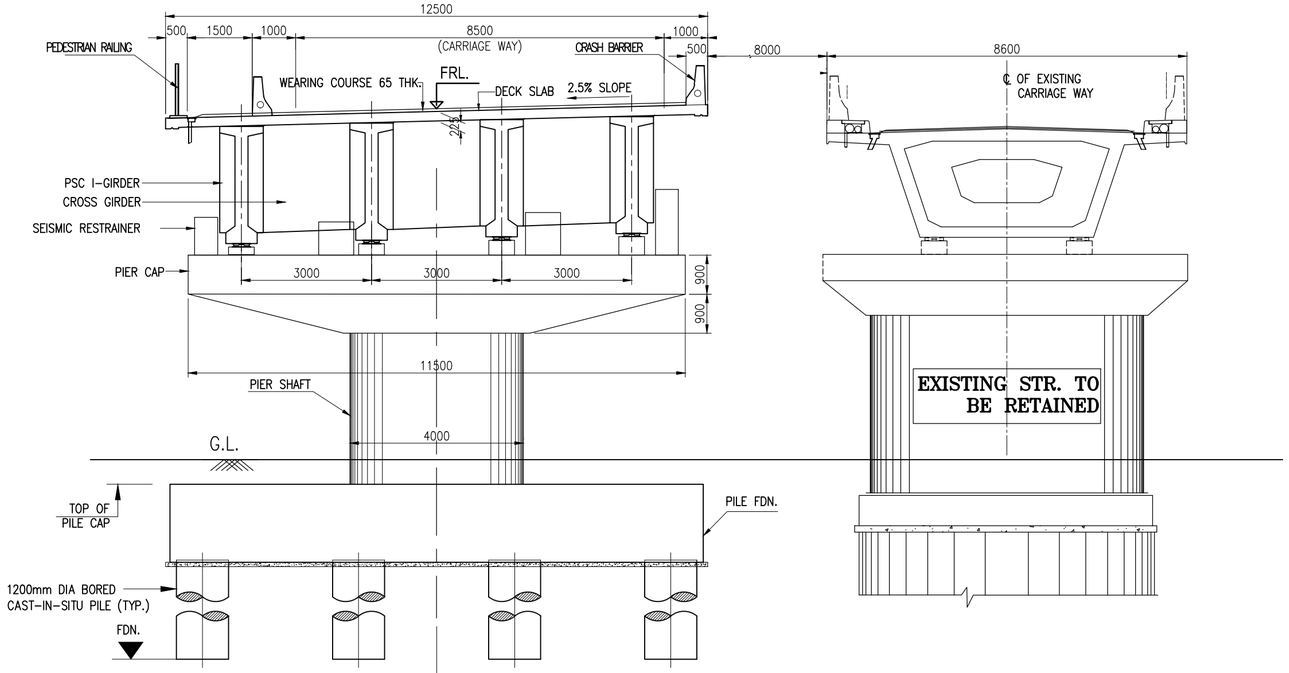

SECTION B - B
(SCALE 1:100)

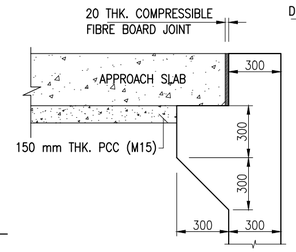

DETAILS - Z
(SCALE 1:25)

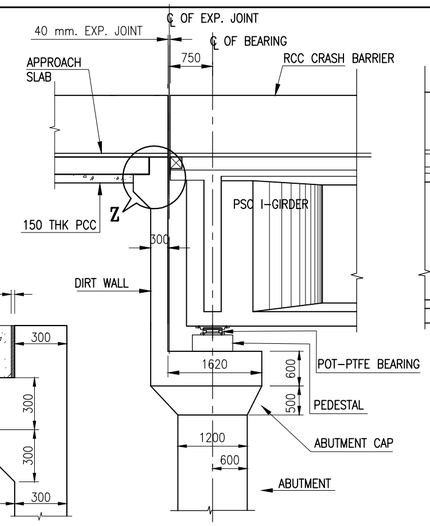

DETAILS - X
(SCALE 1:75)

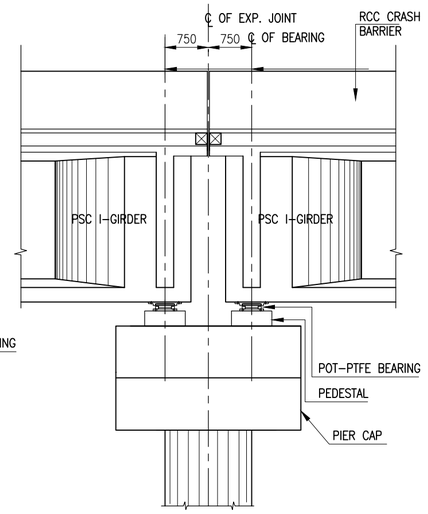

DETAILS - X1
(SCALE 1:75)

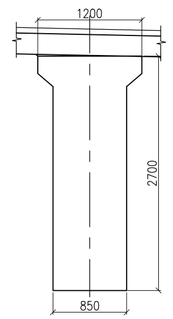

PSC GIRDER AT
SUPPORT SECTION
FOR 45.3m SPAN
(SCALE 1:50)

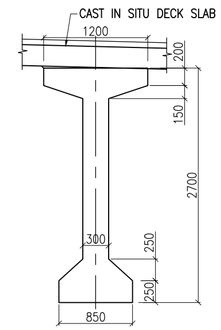

PSC GIRDER AT
MID SECTION FOR
45.3 m SPAN
(SCALE 1:50)

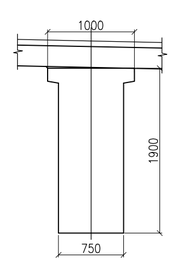

PSC GIRDER AT
SUPPORT SECTION
FOR 29.5m SPAN
(SCALE 1:50)

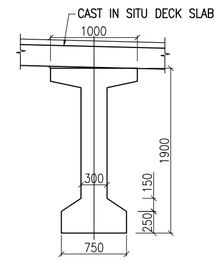

PSC GIRDER AT
MID SECTION FOR
29.5 m SPAN
(SCALE 1:50)

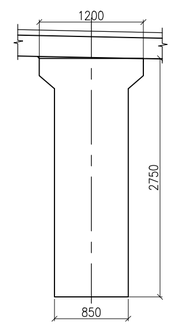

PSC GIRDER AT
SUPPORT SECTION
FOR 46.5m SPAN
(SCALE 1:50)

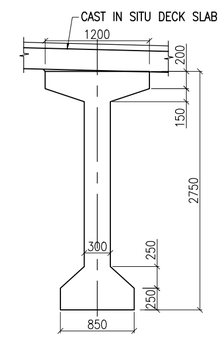

PSC GIRDER AT
MID SECTION FOR
46.5 m SPAN
(SCALE 1:50)

NOTES:

1. ALL DIMENSIONS ARE IN MILLIMETRES AND LEVELS ARE IN METRES. UNLESS OTHERWISE SPECIFIED.
2. DIMENSIONS ARE NOT TO BE SCALED. ONLY WRITTEN DIMENSIONS SHALL BE FOLLOWED.
3. EXPANSION JOINTS SHALL BE OF STRIP SEAL TYPE AS PER SPECIFICATION.
4. POT PTFE BEARING SHALL BE USED.
5. GRADE OF CONCRETE :-
   - PSC I-GIRDER ——— M50
   - RCC CRASH BARRIER ——— M40
   - ABUTMENT, ABUTMENT CAP ——— M40
   - PIER, PIER CAP ——— M40
   - OPEN FOUNDATION ——— M40
   - APPROACH SLAB ——— M30
   - PCC LEVELING COURSE ——— M15
6. HIGH STRENGTH DEFORMED BARS SHALL BE OF GRADE Fe500 CONFORMING TO IS: 1786-1985.
7. EXPANSION JOINT SHALL BE OF STRIP SEAL TYPE AS PER SPECIFICATION.
8. DESIGN OF BRIDGE IS BASED ON LIVE LOAD COMBINATION OF 3-LANES OF CLASS A OR 70R + CLASS A OR SV WHICHEVER PRODUCE SEVER EFFECT.
9. LAYING, COMPACTION & EXTENT OF BACKFILL BEHIND ABUTMENT & RETAINING WALLS SHALL CONSIST OF SELECTED EARTH CONFIRMING TO THE APPENDIX-6 OF IRC:78-2014 HAVING PROPERTIES C=0, ø=≥30° & DENSITY=20KN/m.
10. WEEP HOLES ON THE ABUTMENT & RETAINING WALLS SHALL BE SPACED 1000 c/c HORIZANTALY & VERTICALLY IN STAGGERED MANNER FROM 500MM ABOVE LWL TO HFL.
11. THIS DRAWING SHALL BE READ IN CONJUNCTION WITH DRG. No. VSPL/1718-081/DPR/PKG-4/NH-515/SEC-1/MJB-04.(Sht-1&2)

CLIENT :	PROJECT :	DESIGN CONSULTANT:	Detailed Project Report	DESIGNED BY	DRAWN BY	CHECKED BY	APPROVED BY	TITLE :
NATIONAL HIGHWAYS AND INFRASTRUCTURE DEVELOPMENT CORPORATION LTD. (MINISTRY OF ROAD TRANSPORT AND HIGHWAYS) GOVERNMENT OF INDIA	CONSULTANCY SERVICES FOR PREPARATION OF DETAILED PROJECT REPORT FOR DEVELOPMENT OF ECONOMIC CORRIDORS, INTER CORRIDORS AND FEEDER ROUTES TO IMPROVE THE EFFICIENCY OF FREIGHT MOVEMENTS IN INDIA UNDER BHARATMALA PARIYOJANA (LOT-1:PACKAGE II)	VOYANTS SOLUTIONS PVT LTD. 403, 4th Floor, Park Centra, Sector-30, NH-8 Gurugram-122001, Haryana, India CIN- U74140HR2004PTC046918 Ph: 0124-4598200, Fax: 0124-4019051, E-mail: info@voyants.in, www.voyants.in		SLM	G.Das	MK	SKC	GENERAL ARRANGEMENT DRAWING OF MAJOR BRIDGE AT CH. km. 26+939 (1x46.5+9x45.3+1x29.5)
			REV. / DATE / DESCRIPTION	SCALE : AS SHOWN		SHEET SIZE	A2	DRG. No. : VSPL/1718-081/DPR/PKG-4/NH-515/SEC-1/MJB-04. (Sht. 3 of 3)
								REVISION: R0 — October, 2022

KULAJAN GAON

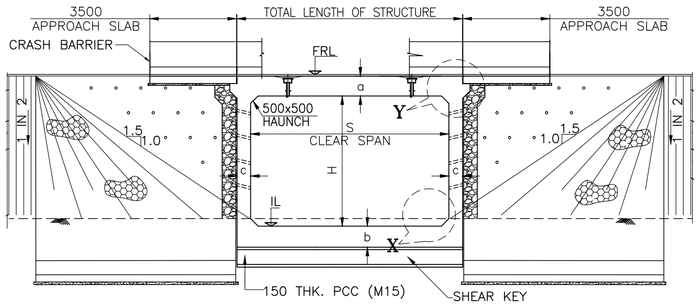

SECTION A–A

(SCALE 1:175)

OYAN

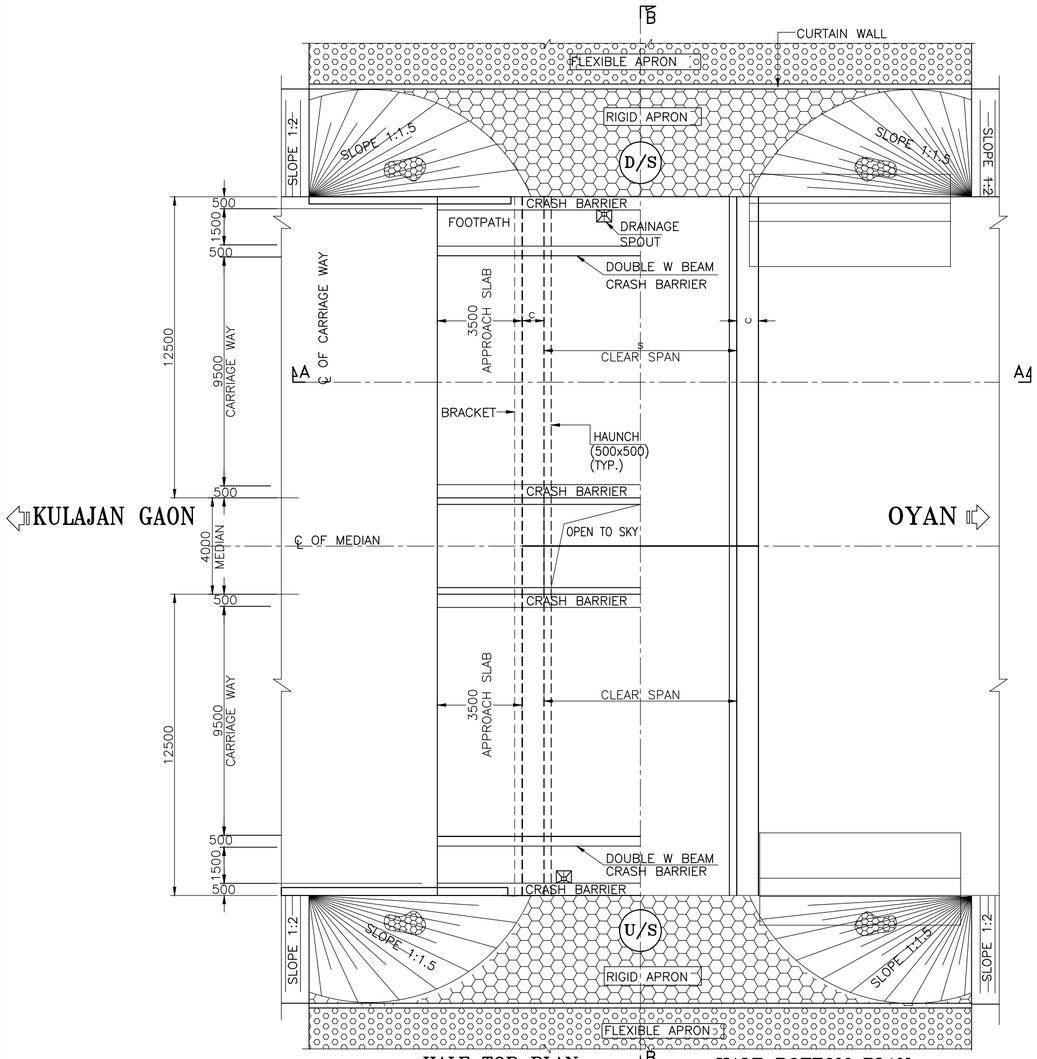

HALF TOP PLAN AT DECK LEVEL — HALF BOTTOM PLAN AT FOUNDATION LEVEL

PLAN

(SCALE 1:175)

Sl. No.	Chainage (KM)		Existing Details						Remarks	Proposal								
	Existing (km)	Design (km)	Name of Stream	Category of Structure	Type of Superstructure	Span Arrangement (m)	Total Length (m)	Total Width (m)		Improvement Proposal	Span Arrangement (m)	Clear Height (m)	Total Length (m)	Total Width (m)	Type of Superstructure	Top Slab (a) (m)	Side Wall (c) (m)	Middle Wall (d) (m)
1	04+640	04+215	Local Stream	MNB	Solid Slab	1 x 7.0	7.0	12.3	Existing Reconstruction	New 2Lane on RHS	1 x 7.0	2.7	7.0	2 x 12.5	RCC Box	0.500	0.500	0.500
2	04+900	04+461	Local Stream	MNB	Solid Slab	1 x 7.0	7.0	12.3	Existing Reconstruction	New 2Lane on RHS	1 x 7.0	2.0	7.0	2 x 12.5	RCC Box	0.500	0.500	0.450

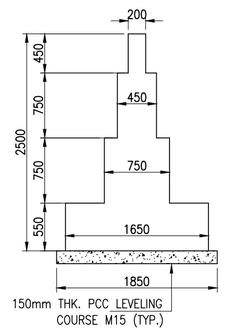

PCC CURTAIN WALL

(TYPE - I)

(SCALE 1:50)

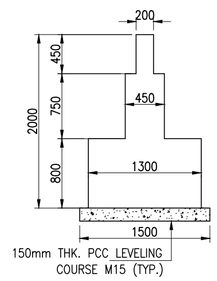

PCC CURTAIN WALL

(TYPE - II)

(SCALE 1:50)

NOTES :–

1. ALL DIMENSIONS ARE IN MM AND LEVELS ARE IN M UNLESS MENTIONED OTHERWISE.
2. DIMENSIONS ARE NOT TO BE SCALED, ONLY WRITTEN DIMENSIONS ARE TO BE FOLLOWED.
3. FOR KEY PLAN, PROPOSED CHAINAGE & LOCATION REFER RELEVANT HIGHWAY DRAWING.
4. GRADE OF CONCRETE USED:
   a) RCC BOX, RETURN WALL M35
   b) CRASH BARRIER.....M40
   c) APPROACH SLAB.....M30
   d) PCC LEVELLING COURSE.....M15
5. ALL REINFORCEMENT STEEL SHALL BE HIGH STRENGTH DEFORMED BARS OF GRADE Fe500 CONFORMING TO IS: 1786–1985
6. THE STRUCTURE IS DESIGNED TO CATER LIVE LOAD COMBINATION OF 3–LANES OF CLASS A OR 1–LANE OF 70R WHILE + 1 LANE A OR IRC SV WHICHEVER PRODUCE SEVER EFFECT.
7. VARIOUS LEVELS (FRL,EGL) & SUPER ELEVATIONS SHOWN IN DRAWINGS SHALL BE VERIFIED WITH THE HIGHWAY PLAN & PROFILE PRIOR TO ACTUAL EXECUTION IN SITE.
8. LAYING, COMPACTION & EXTENT OF BACKFILL BEHIND ABUTMENT & RETAINING WALLS SHALL CONSIST OF SELECTED EARTH CONFIRMING TO THE APPENDIX–6 OF IRC:78–2014 HAVING PROPERTIES C=0, $\phi \geq 30^\circ$ & DENSITY=20KN/m^3
9. WEEP HOLES ON THE ABUTMENT & RETAINING WALLS SHALL BE SPACED 1000 c/c HORIZANTALY & VERTICALLY IN STAGGERED MANNER FROM 500MM ABOVE LWL TO HFL.
10. SOFT AND LOOSE PATCHES IN THE BEARING AREA ARE TO BE REPLACED BY COMPACTED GRANULAR FILLS WITH LAYERS NOT EXCEEDING 300MM.
11. COMPRESSIBLE FILLER BOARD SHALL BE PROVIDED IN ALL EXPANSION GAPS AND SEALED WITH POLY–SULPHIDE SEALANT.

CLIENT :

NATIONAL HIGHWAYS AND INFRASTRUCTURE DEVELOPMENT CORPORATION LTD.
(MINISTRY OF ROAD TRANSPORT AND HIGHWAYS)
GOVERNMENT OF INDIA

PROJECT :

CONSULTANCY SERVICES FOR PREPARATION OF DETAILED PROJECT REPORT FOR DEVELOPMENT OF ECONOMIC CORRIDORS, INTER CORRIDORS AND FEEDER ROUTES TO IMPROVE THE EFFICIENCY OF FREIGHT MOVEMENTS IN INDIA UNDER BHARATMALA PARIYOJANA (LOT-1:PACKAGE II)

DESIGN CONSULTANT:

VOYANTS SOLUTIONS PVT LTD.
403, 4th Floor, Park Centra,
Sector-30, NH-8
Gurugram-122001, Haryana, India
CIN- U74140HR2004PTC046918
Ph: 0124-4598200, Fax: 0124-4019051,
E-mail: info@voyants.in, www.voyants.in

Detailed Project Report

REV.	DATE	DESCRIPTION

DESIGNED BY	DRAWN BY	CHECKED BY	APPROVED BY
SLM	G.Das	MK	SKC
SCALE : AS SHOWN		SHEET SIZE	A2

TITLE :
GENERAL ARRANGEMENT DRAWING OF SINGLE CELL BOX TYPE MINOR BRIDGE
(TYPICAL)

DRG. No. :
VSPL/1718-081/DPR/PKG-4/NH-515/SEC-1/MNB-01(Sht. 1 of 2)

REVISION: R0 — October, 2022

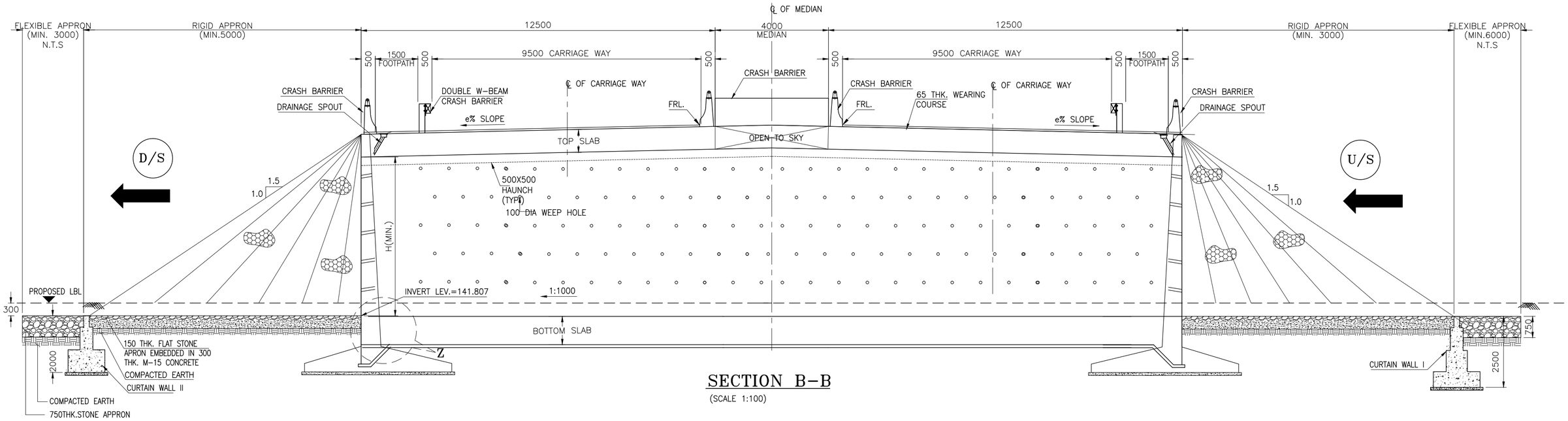

SECTION B-B

(SCALE 1:100)

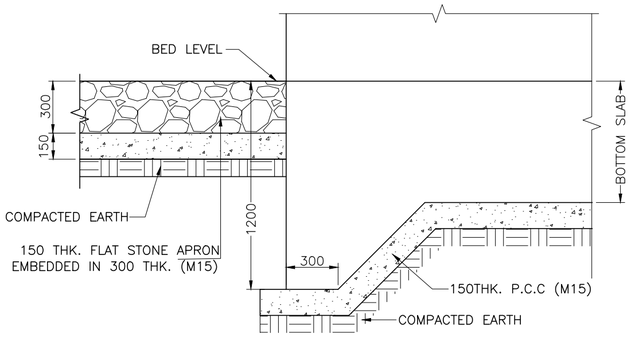

DETAIL 'Z'

(SCALE 1:25)

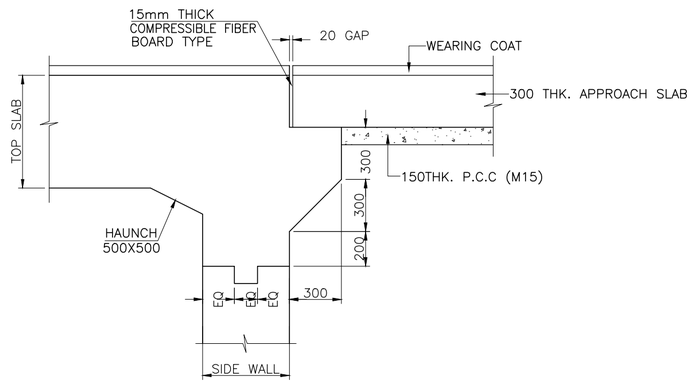

DETAIL Y

(SCALE 1:25)

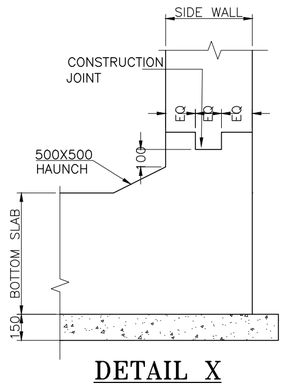

DETAIL X

(SCALE 1:25)

NOTES :-

1. ALL DIMENSIONS ARE IN MM AND LEVELS ARE IN M UNLESS MENTIONED OTHERWISE.
2. DIMENSIONS ARE NOT TO BE SCALED, ONLY WRITTEN DIMENSIONS ARE TO BE FOLLOWED.
3. FOR KEY PLAN, PROPOSED CHAINAGE & LOCATION REFER RELEVANT HIGHWAY DRAWING.

CLIENT : NATIONAL HIGHWAYS AND INFRASTRUCTURE DEVELOPMENT CORPORATION LTD. (MINISTRY OF ROAD TRANSPORT AND HIGHWAYS) GOVERNMENT OF INDIA	PROJECT : CONSULTANCY SERVICES FOR PREPARATION OF DETAILED PROJECT REPORT FOR DEVELOPMENT OF ECONOMIC CORRIDORS, INTER CORRIDORS AND FEEDER ROUTES TO IMPROVE THE EFFICIENCY OF FREIGHT MOVEMENTS IN INDIA UNDER BHARATMALA PARIYOJANA (LOT-1:PACKAGE II)	DESIGN CONSULTANT: VOYANTS SOLUTIONS PVT LTD. 403, 4th Floor, Park Centra, Sector-30, NH-8 Gurugram-122001, Haryana, India CIN- U74140HR2004PTC046918 Ph: 0124-4598200, Fax: 0124-4019051, E-mail: info@voyants.in, www.voyants.in	Detailed Project Report	DESIGNED BY: SLM	DRAWN BY: G.Das	CHECKED BY: MK	APPROVED BY: SKC
			REV. / DATE / DESCRIPTION	SCALE : AS SHOWN	SHEET SIZE: A2	TITLE : GENERAL ARRANGEMENT DRAWING OF SINGLE CELL BOX TYPE MINOR BRIDGE (TYPICAL)
						DRG. No. : VSPL/1718-081/DPR/PKG-4/NH-515/SEC-1/MNB-01(Sht. 2 of 2)
						REVISION: R0 — October, 2022

Sl. No.	Chainage (KM)	Existing Details						Remarks	Proposal									
	Design (km)	Name of Stream	Category of Structure	Type of Superstructure	Span Arrangement (m)	Total Length (m)	Total Width (m)		Improvement Proposal	Span Arrangement (m)	Clear Height (m)	Total Length (m)	Total Width (m)	Type of Superstructure	Top Slab (a) (m)	Bottom Slab (b) (m)	Side Wall (c) (m)	Middle Wall (d) (m)
1	06+955	Mea Bill	MNB	Solid Slab	3 x 9.0	26.3	8.5	Existing Reconstruction	New 2Lane on RHS	3 x 9.0	3.5	27.0	2 x 12.5	RCC Box	0.600	0.675	0.600	0.500
2	23+444	Local Stream	MNB	RCC Box	9 x 3.0	27.0	8.5	Existing Reconstruction	New 2Lane on RHS	3 x 9.0	3.0	27.0	2 x 12.5	RCC Box	0.600	0.675	0.600	0.500

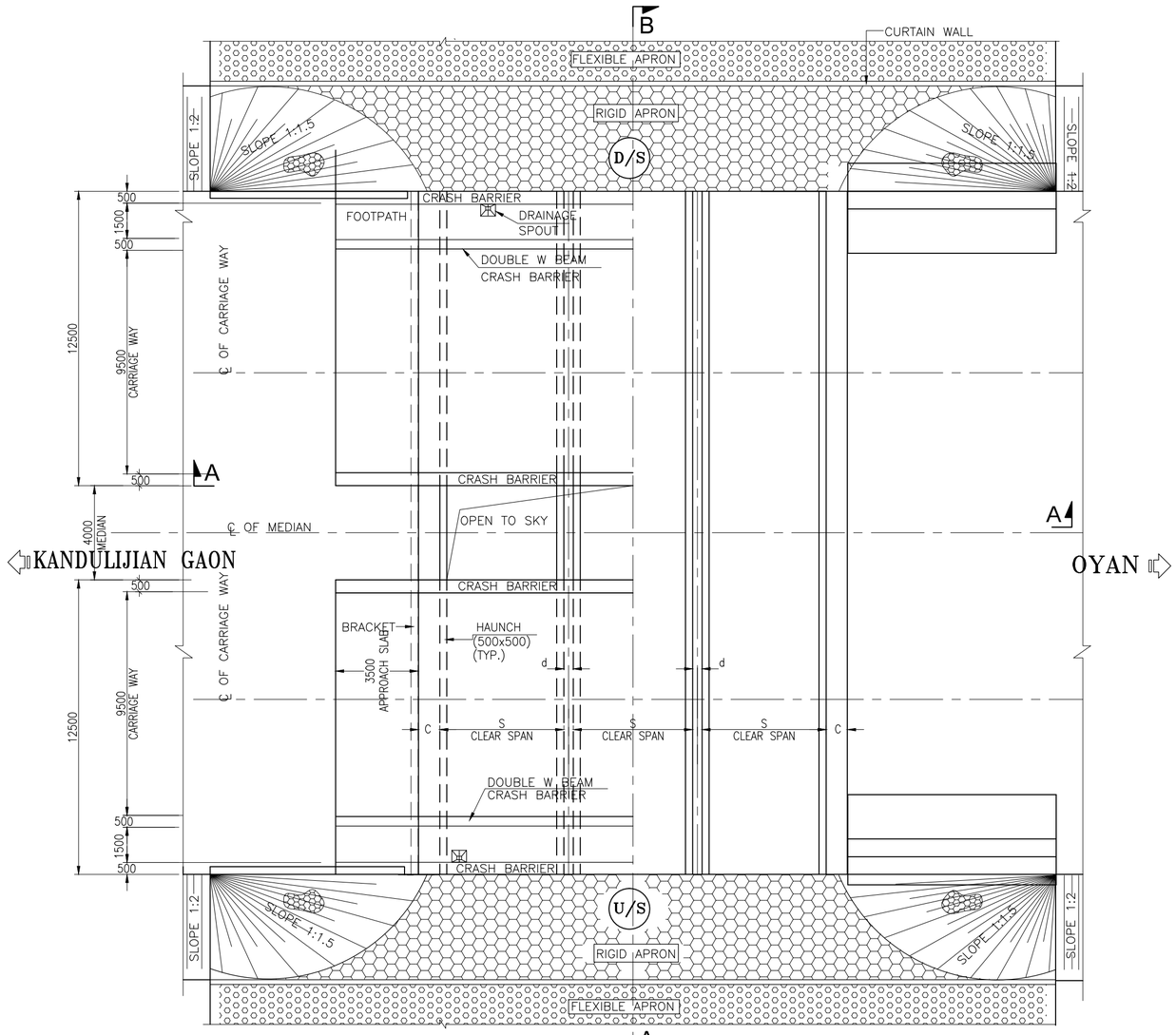

HALF TOP PLAN AT DECK LEVEL — HALF BOTTOM PLAN AT FOUNDATION LEVEL

P L A N

(SCALE 1:175)

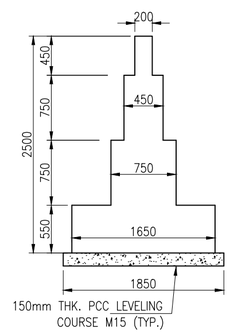

PCC CURTAIN WALL

(TYPE - I)

(SCALE 1:50)

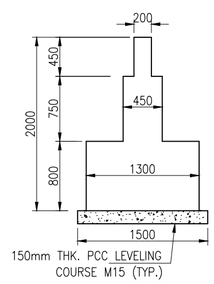

PCC CURTAIN WALL

(TYPE -II)

(SCALE 1:50)

NOTES :-

1. ALL DIMENSIONS ARE IN MM AND LEVELS ARE IN M UNLESS MENTIONED OTHERWISE.
2. DIMENSIONS ARE NOT TO BE SCALED, ONLY WRITTEN DIMENSIONS ARE TO BE FOLLOWED.
3. FOR KEY PLAN, PROPOSED CHAINAGE & LOCATION REFER RELEVANT HIGHWAY DRAWING.
4. GRADE OF CONCRETE USED:
   a) RCC BOX, RETURN WALL M35
   b) CRASH BARRIER.....M40
   c) APPROACH SLAB.....M30
   d) PCC LEVELLING COURSE.....M15
5. ALL REINFORCEMENT STEEL SHALL BE HIGH STRENGTH DEFORMED BARS OF GRADE Fe500 CONFORMING TO IS: 1786-1985
6. THE STRUCTURE IS DESIGNED TO CATER LIVE LOAD COMBINATION OF 3-LANES OF CLASS A OR 1-LANE OF 70R WHILE + 1 LANE A OR IRC SV WHICHEVER PRODUCE SEVER EFFECT.
7. VARIOUS LEVELS (FRL,EGL) & SUPER ELEVATIONS SHOWN IN DRAWINGS SHALL BE VERIFIED WITH THE HIGHWAY PLAN & PROFILE PRIOR TO ACTUAL EXECUTION IN SITE.
8. LAYING, COMPACTION & EXTENT OF BACKFILL BEHIND ABUTMENT & RETAINING WALLS SHALL CONSIST OF SELECTED EARTH CONFIRMING TO THE APPENDIX-6 OF IRC:78-2014 HAVING PROPERTIES C=0, $\phi \geqslant 30^{\circ}$ & DENSITY=20KN/m^3
9. WEEP HOLES ON THE ABUTMENT & RETAINING WALLS SHALL BE SPACED 1000 c/c HORIZANTALY & VERTICALLY IN STAGGERED MANNER FROM 500MM ABOVE LWL TO HFL.
10. SOFT AND LOOSE PATCHES IN THE BEARING AREA ARE TO BE REPLACED BY COMPACTED GRANULAR FILLS WITH LAYERS NOT EXCEEDING 300MM.
11. COMPRESSIBLE FILLER BOARD SHALL BE PROVIDED IN ALL EXPANSION GAPS AND SEALED WITH POLY-SULPHIDE SEALANT.

CLIENT :

NATIONAL HIGHWAYS AND INFRASTRUCTURE DEVELOPMENT CORPORATION LTD.
(MINISTRY OF ROAD TRANSPORT AND HIGHWAYS)
GOVERNMENT OF INDIA

PROJECT :

CONSULTANCY SERVICES FOR PREPARATION OF DETAILED PROJECT REPORT FOR DEVELOPMENT OF ECONOMIC CORRIDORS, INTER CORRIDORS AND FEEDER ROUTES TO IMPROVE THE EFFICIENCY OF FREIGHT MOVEMENTS IN INDIA UNDER BHARATMALA PARIYOJANA (LOT-1:PACKAGE II) (FROM KM 38+500 TO KM 56+084)

DESIGN CONSULTANT:

VOYANTS SOLUTIONS PVT LTD.
403, 4th Floor, Park Centra,
Sector-30, NH-8
Gurugram-122001, Haryana, India
CIN- U74140HR2004PTC046918
Ph: 0124-4598200, Fax: 0124-4019051,
E-mail: info@voyants.in, www.voyants.in

Detailed Project Report

REV.	DATE	DESCRIPTION

DESIGNED BY	DRAWN BY	CHECKED BY	APPROVED BY
SB	GD	MK	SKC
SCALE : AS SHOWN		SHEET SIZE	A2

TITLE :
GENERAL ARRANGEMENT DRAWING OF MINOR BRIDGE THREE CELL BOX (NEW CONSTRUCTION)

DRG. No. :
VSPL/1718-081/DPR/PKG-4/NH-515/SEC-1/MNB-02(Sht. 1 of 2)

REVISION: R0 October, 2022

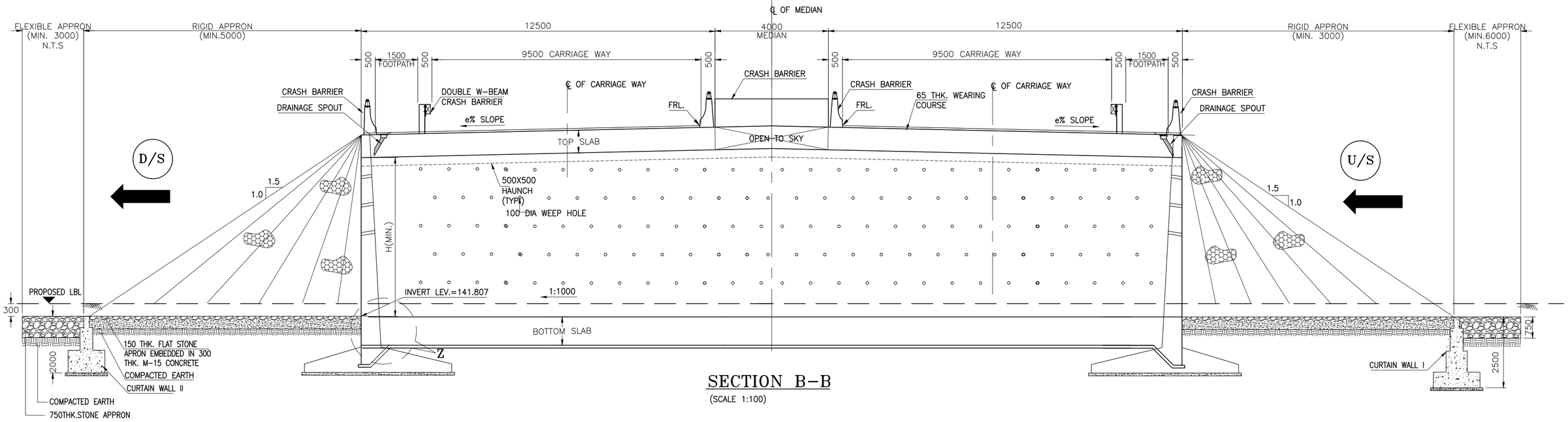

SECTION B-B
(SCALE 1:100)

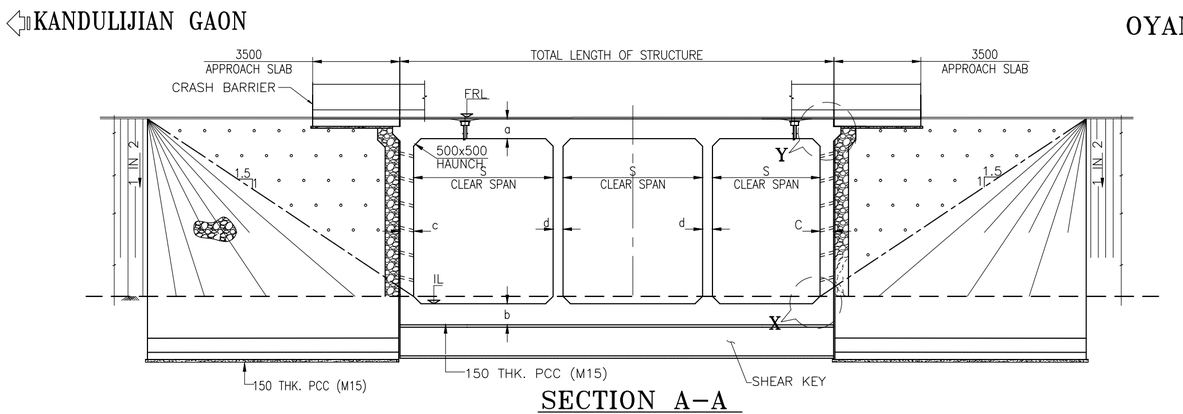

SECTION A-A
(SCALE 1:175)

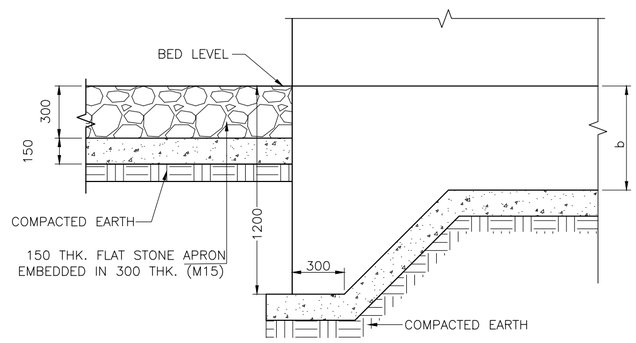

DETAIL 'Z'
(SCALE 1:25)

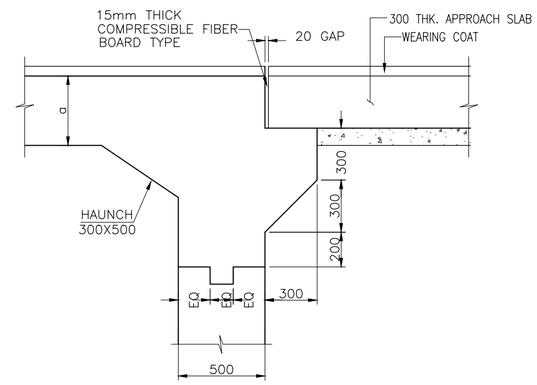

DETAIL Y
(SCALE 1:25)

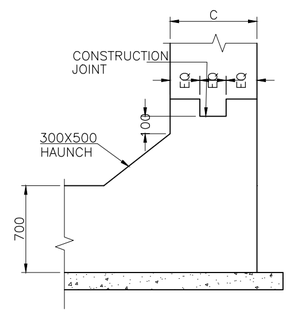

DETAIL X
(SCALE 1:25)

NOTES :-

1. ALL DIMENSIONS ARE IN MM AND LEVELS ARE IN M UNLESS MENTIONED OTHERWISE.
2. DIMENSIONS ARE NOT TO BE SCALED, ONLY WRITTEN DIMENSIONS ARE TO BE FOLLOWED.
3. FOR KEY PLAN, PROPOSED CHAINAGE & LOCATION REFER RELEVANT HIGHWAY DRAWING.

CLIENT :	PROJECT :	DESIGN CONSULTANT:	Detailed Project Report	DESIGNED BY	DRAWN BY	CHECKED BY	APPROVED BY	TITLE :
NATIONAL HIGHWAYS AND INFRASTRUCTURE DEVELOPMENT CORPORATION LTD. (MINISTRY OF ROAD TRANSPORT AND HIGHWAYS) GOVERNMENT OF INDIA	CONSULTANCY SERVICES FOR PREPARATION OF DETAILED PROJECT REPORT FOR DEVELOPMENT OF ECONOMIC CORRIDORS, INTER CORRIDORS AND FEEDER ROUTES TO IMPROVE THE EFFICIENCY OF FREIGHT MOVEMENTS IN INDIA UNDER BHARATMALA PARIYOJANA (LOT-1:PACKAGE II) (FROM KM 38+500 TO KM 56+084)	VOYANTS SOLUTIONS PVT LTD. 403, 4th Floor, Park Centra, Sector-30, NH-8 Gurugram-122001, Haryana, India CIN- U74140HR2004PTC046918 Ph: 0124-4598200, Fax: 0124-4019051, E-mail: info@voyants.in, www.voyants.in		SB	GD	MK	SKC	GENERAL ARRANGEMENT DRAWING OF MINOR BRIDGE THREE CELL BOX (NEW CONSTRUCTION)
			REV. / DATE / DESCRIPTION	SCALE : AS SHOWN		SHEET SIZE	A2	DRG. No. : VSPL/1718-081/DPR/PKG-4/NH-515/SEC-1/MNB-02(Sht. 1 of 2)
								REVISION: R0 — October, 2022

Sl. No.	Chainage (KM)	Existing Details						Remarks	Proposal									
	Design (km)	Name of Stream	Category of Structure	Type of Superstructure	Span Arrangement (m)	Total Length (m)	Total Width (m)		Improvement Proposal	Span Arrangement (m)	Clear Height (m)	Total Length (m)	Total Width (m)	Type of Superstructure	Top Slab (a) (m)	Bottom Slab (b) (m)	Side Wall (c) (m)	Middle Wall (d) (m)
4	10+987	Jalakiasuti	MNB	RCC Box	3 x 9.0	27.0	12.0	Existing Retain	New 2Lane on RHS	3 x 9.0	4.0	27.0	12.5	RCC Box	0.650	0.700	0.650	0.550
5	21+300	Local Stream	MNB	RCC Box	6 x 3.0	18.0	12.1	Existing Retain	New 2Lane on RHS	3 x 6.0	5.0	18.0	12.5	RCC Box	0.400	0.475	0.400	0.350

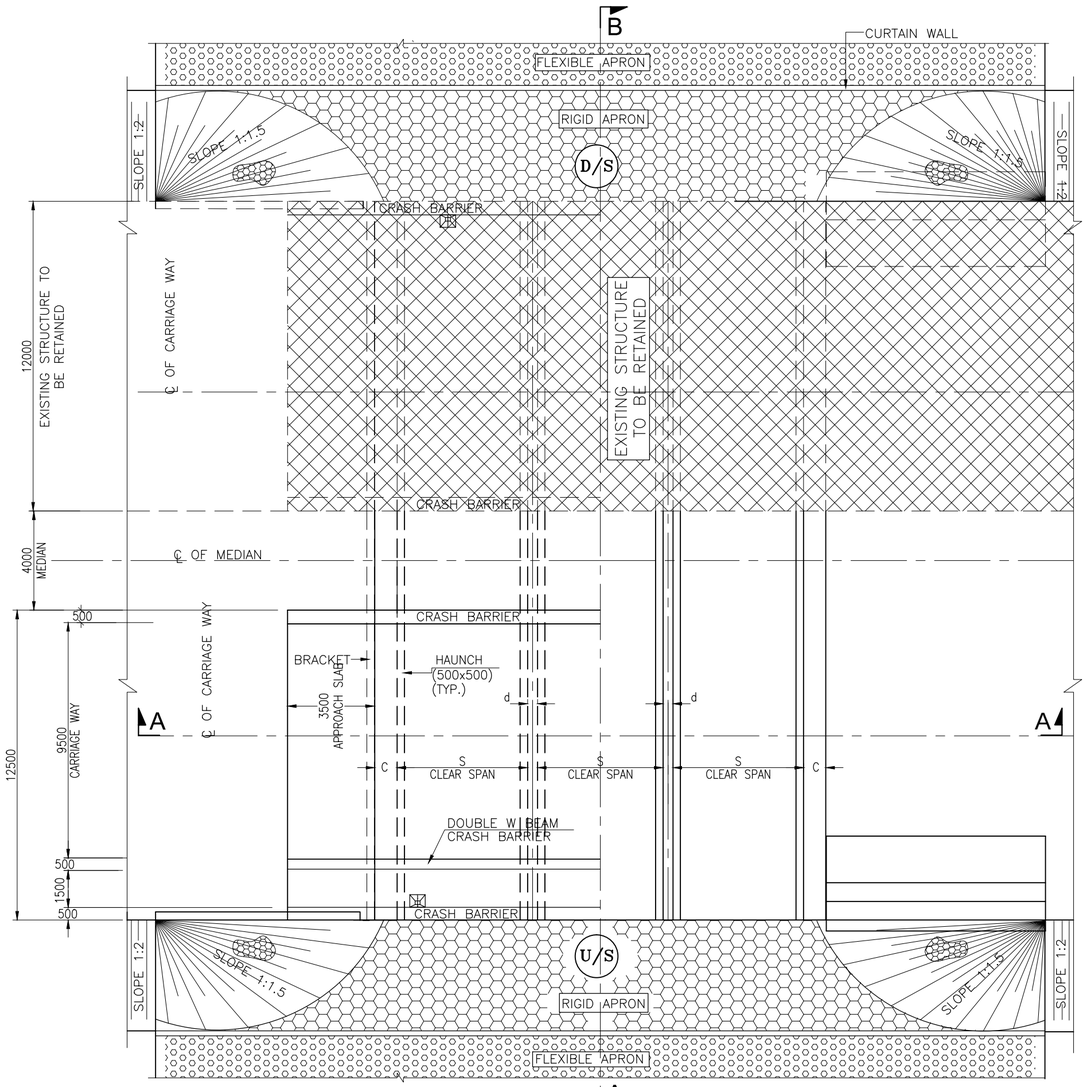

HALF TOP PLAN AT DECK LEVEL — HALF BOTTOM PLAN AT FOUNDATION LEVEL

P L A N

(SCALE 1:175)

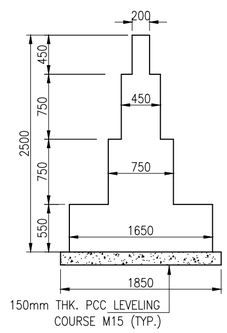

PCC CURTAIN WALL (TYPE - I)

(SCALE 1:50)

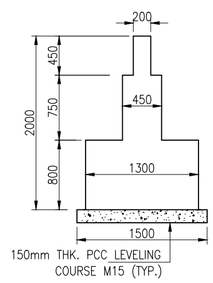

PCC CURTAIN WALL (TYPE -II)

(SCALE 1:50)

NOTES :-

1. ALL DIMENSIONS ARE IN MM AND LEVELS ARE IN M UNLESS MENTIONED OTHERWISE.
2. DIMENSIONS ARE NOT TO BE SCALED, ONLY WRITTEN DIMENSIONS ARE TO BE FOLLOWED.
3. FOR KEY PLAN, PROPOSED CHAINAGE & LOCATION REFER RELEVANT HIGHWAY DRAWING.
4. GRADE OF CONCRETE USED:
   a) RCC BOX, RETURN WALL M35
   b) CRASH BARRIER.....M40
   c) APPROACH SLAB.....M30
   d) PCC LEVELLING COURSE.....M15
5. ALL REINFORCEMENT STEEL SHALL BE HIGH STRENGTH DEFORMED BARS OF GRADE Fe500 CONFORMING TO IS: 1786-1985
6. THE STRUCTURE IS DESIGNED TO CATER LIVE LOAD COMBINATION OF 3-LANES OF CLASS A OR 1-LANE OF 70R WHILE + 1 LANE A OR IRC SV WHICHEVER PRODUCE SEVER EFFECT.
7. VARIOUS LEVELS (FRL,EGL) & SUPER ELEVATIONS SHOWN IN DRAWINGS SHALL BE VERIFIED WITH THE HIGHWAY PLAN & PROFILE PRIOR TO ACTUAL EXECUTION IN SITE.
8. LAYING, COMPACTION & EXTENT OF BACKFILL BEHIND ABUTMENT & RETAINING WALLS SHALL CONSIST OF SELECTED EARTH CONFIRMING TO THE APPENDIX-6 OF IRC:78-2014 HAVING PROPERTIES C=0, $\phi \geqslant 30^{\circ}$ & DENSITY=20KN/m^3
9. WEEP HOLES ON THE ABUTMENT & RETAINING WALLS SHALL BE SPACED 1000 c/c HORIZANTALY & VERTICALLY IN STAGGERED MANNER FROM 500MM ABOVE LWL TO HFL.
10. SOFT AND LOOSE PATCHES IN THE BEARING AREA ARE TO BE REPLACED BY COMPACTED GRANULAR FILLS WITH LAYERS NOT EXCEEDING 300MM.
11. COMPRESSIBLE FILLER BOARD SHALL BE PROVIDED IN ALL EXPANSION GAPS AND SEALED WITH POLY-SULPHIDE SEALANT.

CLIENT :

NATIONAL HIGHWAYS AND INFRASTRUCTURE DEVELOPMENT CORPORATION LTD.
(MINISTRY OF ROAD TRANSPORT AND HIGHWAYS)
GOVERNMENT OF INDIA

PROJECT :

CONSULTANCY SERVICES FOR PREPARATION OF DETAILED PROJECT REPORT FOR DEVELOPMENT OF ECONOMIC CORRIDORS, INTER CORRIDORS AND FEEDER ROUTES TO IMPROVE THE EFFICIENCY OF FREIGHT MOVEMENTS IN INDIA UNDER BHARATMALA PARIYOJANA (LOT-1:PACKAGE II) (FROM KM 38+500 TO KM 56+084)

DESIGN CONSULTANT:

VOYANTS SOLUTIONS PVT LTD.
403, 4th Floor, Park Centra,
Sector-30, NH-8
Gurugram-122001, Haryana, India
CIN- U74140HR2004PTC046918
Ph: 0124-4598200, Fax: 0124-4019051,
E-mail: info@voyants.in, www.voyants.in

Detailed Project Report

REV.	DATE	DESCRIPTION

DESIGNED BY	DRAWN BY	CHECKED BY	APPROVED BY
SB	GD	SG	SKC
SCALE :	AS SHOWN	SHEET SIZE	A2

TITLE :
GENERAL ARRANGEMENT DRAWING OF THREE CELL BOX TYPE MINOR BRIDGE
(RETAINED + NEW)

DRG. No. :
VSPL/1718-081/DPR/PKG-4/NH-515/SEC-1/MNB-03(Sht. 1 of 2)

REVISION: R0 — October, 2022

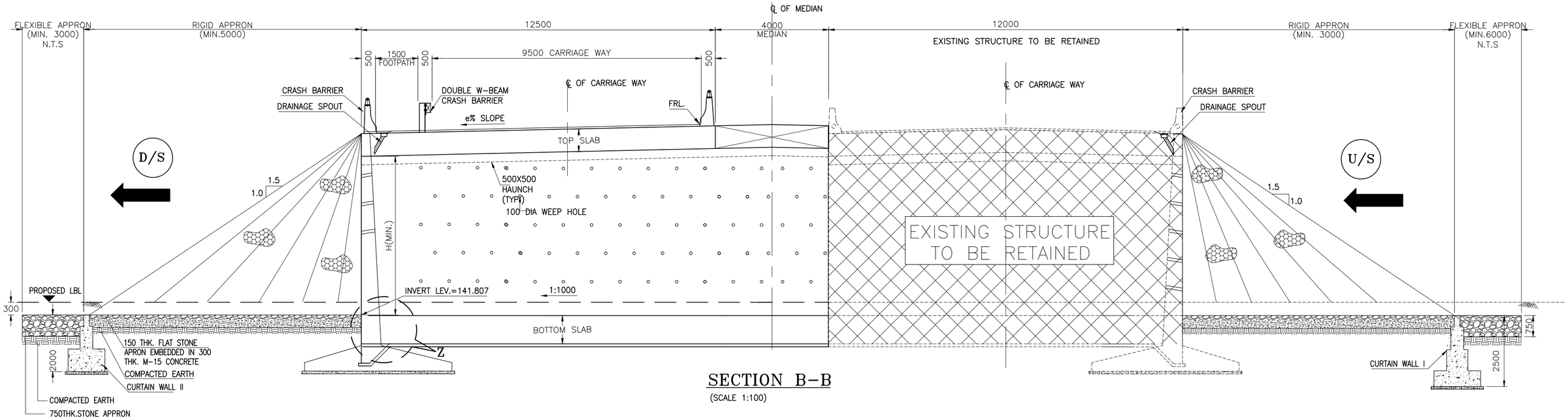

SECTION B-B
(SCALE 1:100)

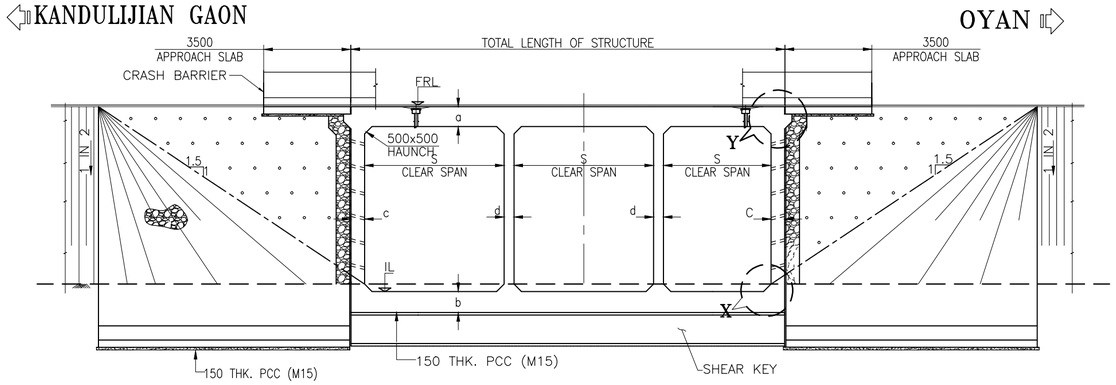

SECTION A-A
(SCALE 1:175)

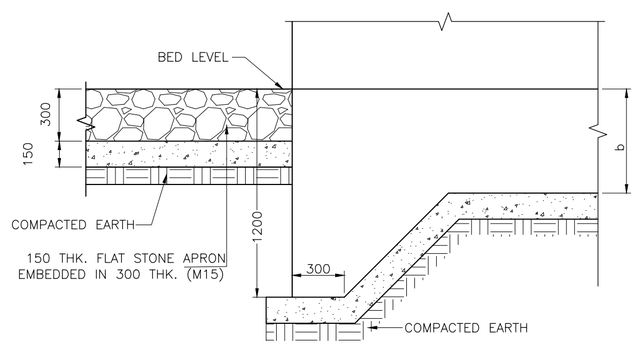

DETAIL 'Z'
(SCALE 1:25)

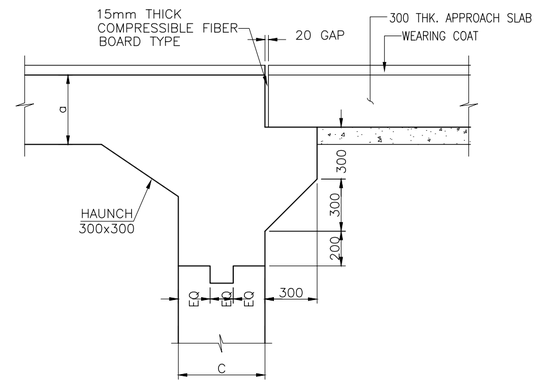

DETAIL Y
(SCALE 1:25)

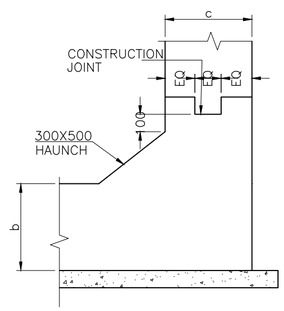

DETAIL X
(SCALE 1:25)

NOTES :-

1. ALL DIMENSIONS ARE IN MM AND LEVELS ARE IN M UNLESS MENTIONED OTHERWISE.
2. DIMENSIONS ARE NOT TO BE SCALED, ONLY WRITTEN DIMENSIONS ARE TO BE FOLLOWED.
3. FOR KEY PLAN, PROPOSED CHAINAGE & LOCATION REFER RELEVANT HIGHWAY DRAWING.

CLIENT :	PROJECT :	DESIGN CONSULTANT:	Detailed Project Report	DESIGNED BY	DRAWN BY	CHECKED BY	APPROVED BY	TITLE :
NATIONAL HIGHWAYS AND INFRASTRUCTURE DEVELOPMENT CORPORATION LTD. (MINISTRY OF ROAD TRANSPORT AND HIGHWAYS) GOVERNMENT OF INDIA	CONSULTANCY SERVICES FOR PREPARATION OF DETAILED PROJECT REPORT FOR DEVELOPMENT OF ECONOMIC CORRIDORS, INTER CORRIDORS AND FEEDER ROUTES TO IMPROVE THE EFFICIENCY OF FREIGHT MOVEMENTS IN INDIA UNDER BHARATMALA PARIYOJANA (LOT-1:PACKAGE II) (FROM KM 38+500 TO KM 56+084)	VOYANTS SOLUTIONS PVT LTD. 403, 4th Floor, Park Centra, Sector-30, NH-8 Gurugram-122001, Haryana, India CIN- U74140HR2004PTC046918 Ph: 0124-4598200, Fax: 0124-4019051, E-mail: info@voyants.in, www.voyants.in		SB	GD	SG	SKC	GENERAL ARRANGEMENT DRAWING OF THREE CELL BOX TYPE MINOR BRIDGE (RETAINED + NEW)
			REV. DATE DESCRIPTION	SCALE : AS SHOWN		SHEET SIZE	A2	DRG. No. : VSPL/1718-081/DPR/PKG-4/NH-515/SEC-1/MNB-03(Sht. 1 of 2)
								REVISION: R0 October, 2022

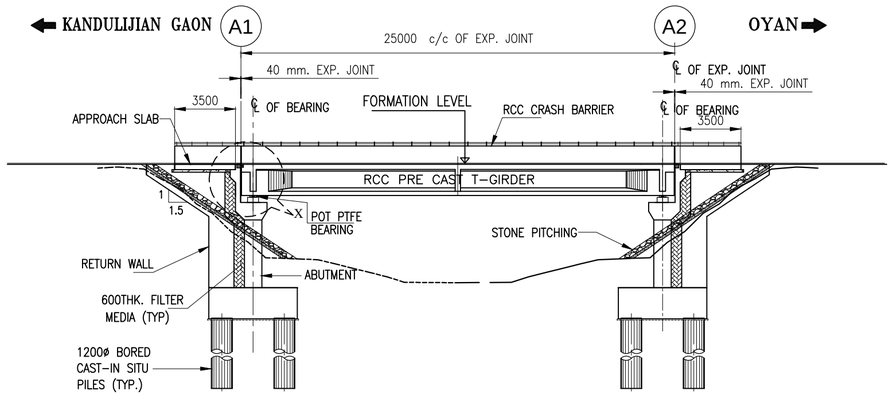

SECTIONAL ELEVATION
(SCALE 1:250)

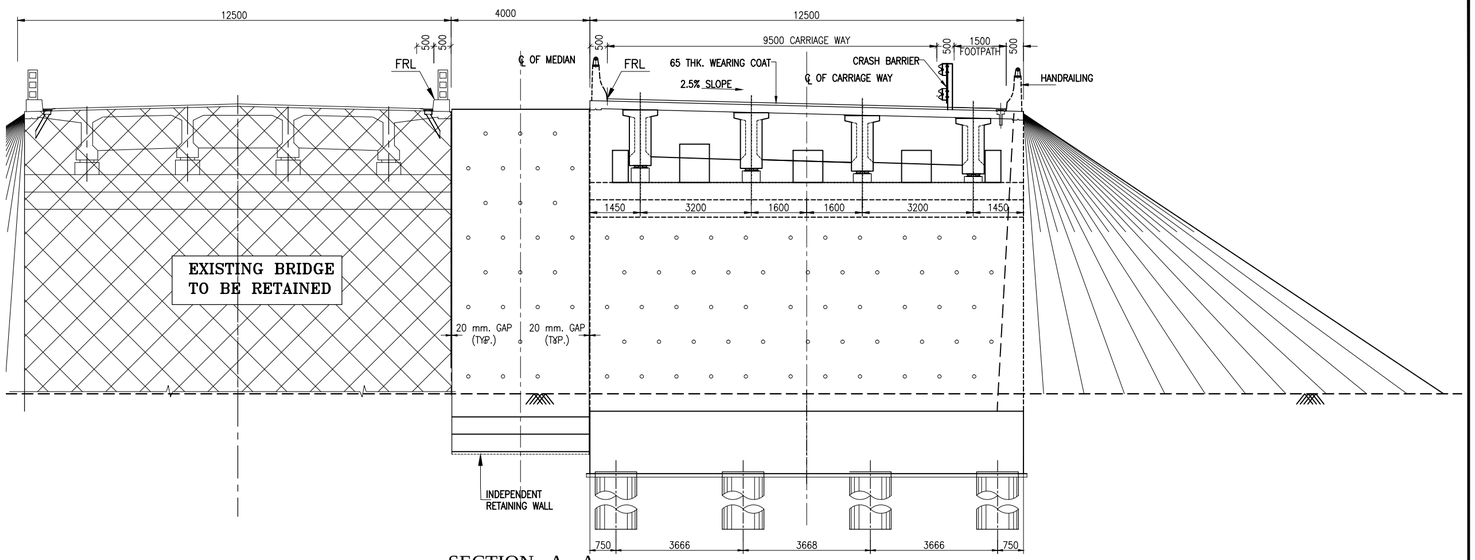

SECTION A - A
(Scale 1:100)

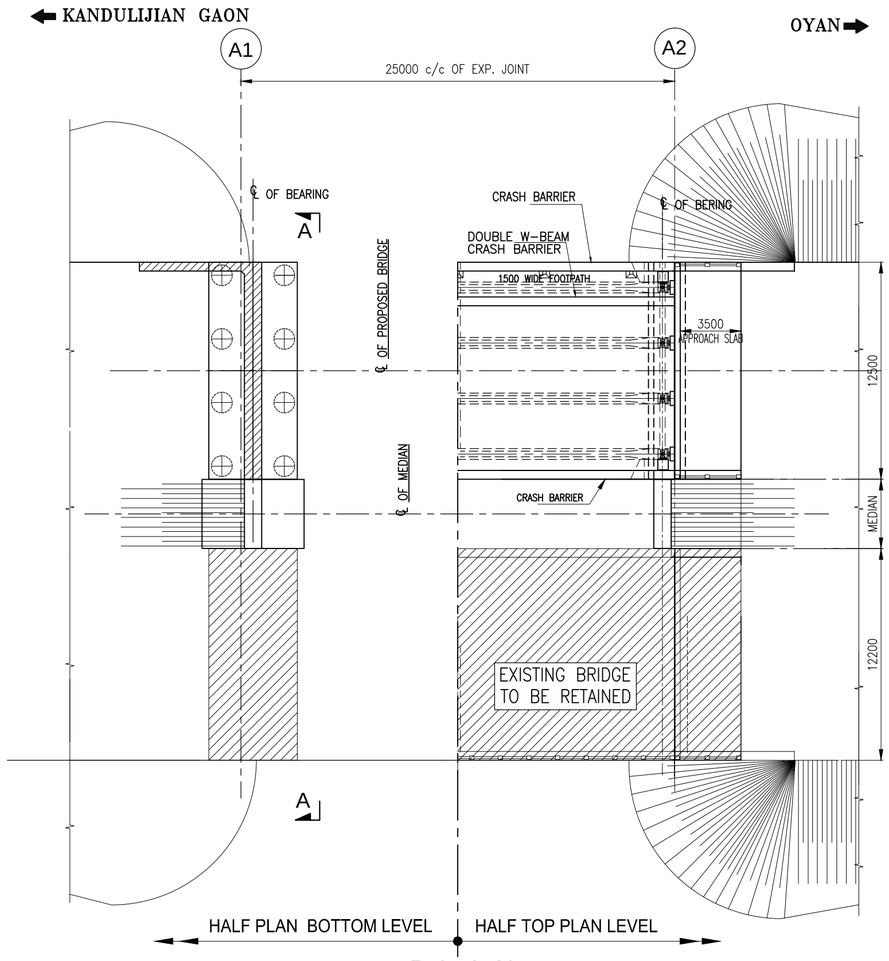

P L A N
(SCALE 1:250)

Sl. No.	Chainage (KM)	Existing Details						Remarks	Proposal					FRL (m)		GL (m)	
	Design (km)	Name of Stream	Category of Structure	Type of Superstructure	Span Arrangement (m)	Total Length (m)	Total Width (m)		Improvement Proposal	Span Arrangement (m)	Total Length (m)	Total Width (m)	Type of Superstructure	A1	A2	A1	A2
1	07+831	Silagaon	MNB	RCC I-Girder	1 x 25.0	24.5	12.2	Existing Retain	New 2Lane on RHS	1 x 25.0	25.0	12.5	RCC I-Girder	117.968	117.973	112.148	112.019
2	22+507	Local Stream	MNB	RCC I Girder	1 x 25.0	25.0	12.5	Existing Retain	New 2Lane on RHS	1 x 25.0	25.0	12.5	RCC I-Girder	134.090	134.087	128.933	127.767
3	22+804	Local Stream	MNB	RCC I Girder	1 x 25.0	25.0	8.5	Existing Retain	New 2Lane on RHS	1 x 25.0	25.0	12.5	RCC I-Girder	132.614	132.558	128.947	128.652
4	23+747	Local Stream	MNB	RCC I Girder	2 x 13.0	26.0	8.5	Existing Retain	New 2Lane on RHS	1 x 26.0	25.0	12.5	RCC I-Girder	132.599	132.652	127.869	128.045
5	25+464	Local Stream	MNB	RCC I Girder	1 x 25.0	25.0	9.0	Existing Retain	New 2Lane on RHS	1 x 25.0	25.0	12.5	RCC I-Girder	134.458	134.456	130.239	127.467

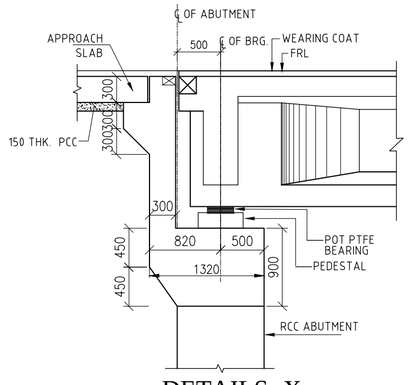

DETAILS -X
(SCALE 1:50)

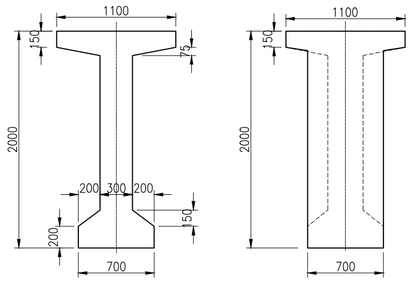

SECTION AT MID SECTION AT END

DETAILS FOR PRECAST RCC T-GIRDER
(SCALE 1:40)

NOTES:

1. ALL DIMENSIONS ARE IN MILLIMETRES AND LEVELS ARE IN METRES. UNLESS OTHERWISE SPECIFIED.
2. DIMENSIONS ARE NOT TO BE SCALED. ONLY WRITTEN DIMENSIONS SHALL BE FOLLOWED.
3. EXPANSION JOINTS SHALL BE OF STRIP SEAL TYPE AS PER SPECIFICATION.
4. POT PTFE BEARING SHALL BE USED.
5. GRADE OF CONCRETE :-
   - RCC PRE CAST T-GIRDER — M35
   - RCC DECK SLAB — M35
   - RCC CRASH BARRIER — M40
   - ABUTMENT, ABUTMENT CAP — M35
   - APPROACH SLAB — M35
   - PCC LEVELING COURSE — M15
   - PILE, PILE CAP — M35

CLIENT :
NATIONAL HIGHWAYS AND INFRASTRUCTURE DEVELOPMENT CORPORATION LTD. (MINISTRY OF ROAD TRANSPORT AND HIGHWAYS) GOVERNMENT OF INDIA

PROJECT :
CONSULTANCY SERVICES FOR PREPARATION OF DETAILED PROJECT REPORT FOR DEVELOPMENT OF ECONOMIC CORRIDORS, INTER CORRIDORS AND FEEDER ROUTES TO IMPROVE THE EFFICIENCY OF FREIGHT MOVEMENTS IN INDIA UNDER BHARATMALA PARIYOJANA (LOT-1:PACKAGE IV)

DESIGN CONSULTANT:
VOYANTS SOLUTIONS PVT LTD.
403, 4th Floor, Park Centra, Sector-30, NH-8
Gurugram-122001, Haryana, India
CIN- U74140HR2004PTC046918
Ph: 0124-4598200, Fax: 0124-4019051,
E-mail: info@voyants.in, www.voyants.in

Detaild Project Report

REV.	DATE	DESCRIPTION

DESIGNED BY	DRAWN BY	CHECKED BY	APPROVED BY
SLM	G. Das	MK	SKC
SCALE :	AS SHOWN	SHEET SIZE	A2

TITLE :
GENERAL ARRANGEMENT DRAWING OF MINOR GIRDER BRIDGE (RETAINED+NEW)

DRG. No. :
VSPL/1718-081/DPR/PKG-4/NH-515/SEC-1/MNB-04

REVISION: R0 October, 2022

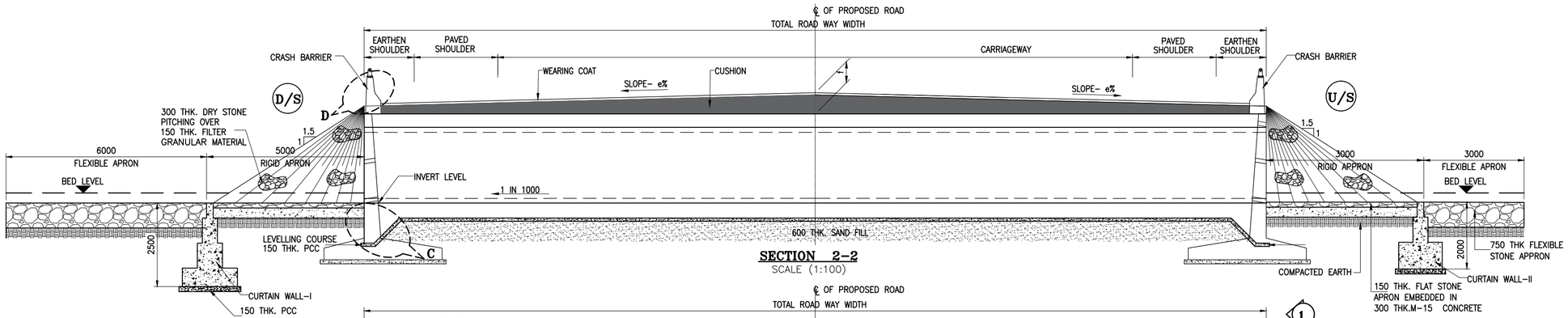

SECTION 2-2
SCALE (1:100)

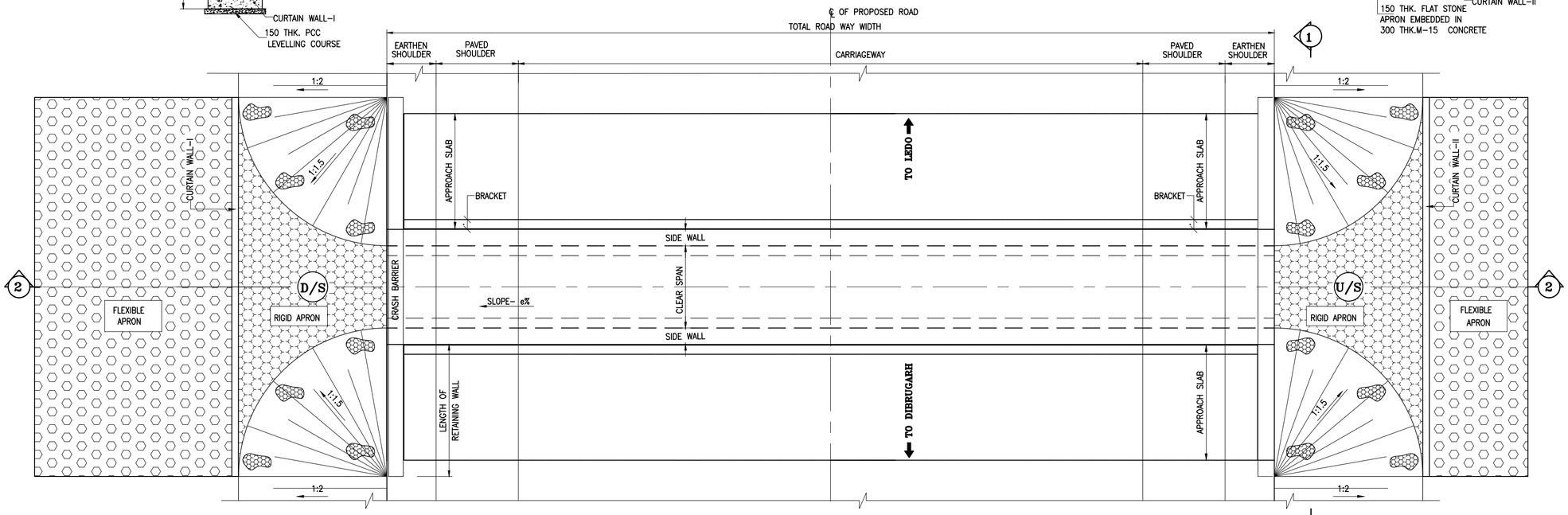

PLAN
SCALE (1:100)

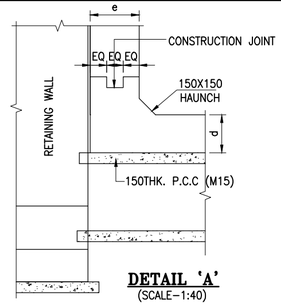

DETAIL 'A'
(SCALE-1:40)

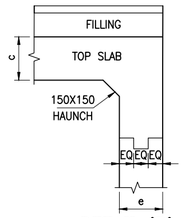

DETAIL 'B'
(SCALE-1:40)

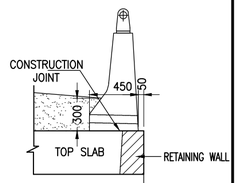

DETAIL 'D
(SCALE-1:40)

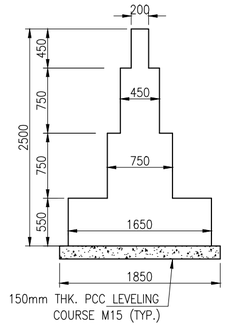

PCC CURTAIN WALL
(TYPE - I)
(SCALE 1:50)

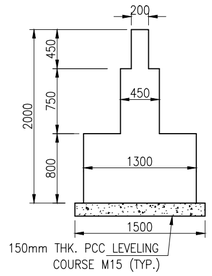

PCC CURTAIN WALL
(TYPE -II)
(SCALE 1:50)

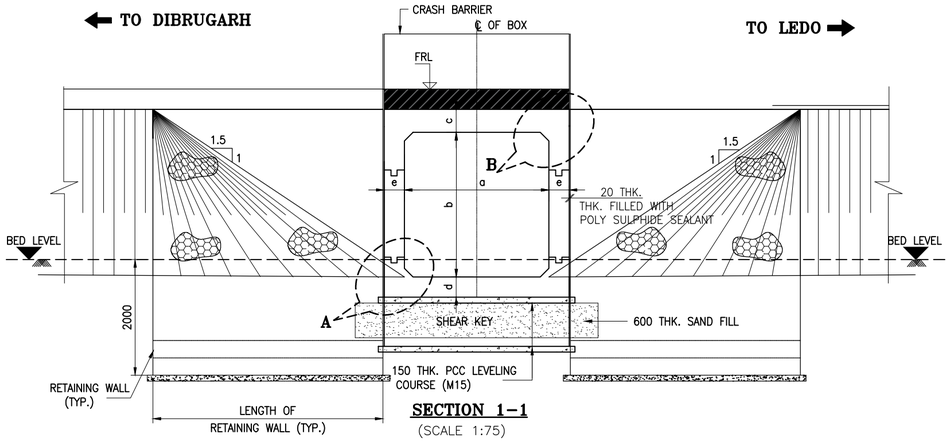

SECTION 1-1
(SCALE 1:75)

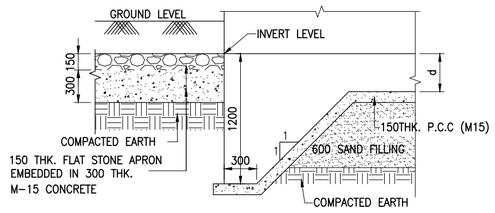

DETAIL 'C'
(SCALE-1:40)

a= CLEAR SPAN
b= CLEAR HEIGHT
c= THK. OF TOP SLAB
d= THK. OF BOTTOM SLAB
e= THK. OF SIDE WALL

NOTES:-

1. ALL DIMENSIONS ARE IN MILLIMETRES, LEVELS ARE IN METRES AND CHAINAGES ARE IN KILOMETRES, UNLESS OTHERWISE MENTIONED. ONLY WRITTEN DIMENSIONS SHALL BE FOLLOWED.
2. THIS DRAWING IS TO BE READ IN CONJUNCTION WITH THE RELEVANT HIGHWAY PLAN AND PROFILE DRAWING.
3. THE STRUCTURE IS DESIGNED FOR LIVE LOAD COMBINATION OF 3 LANE CLASS A OR 1-LANE OF 70 R+1-LANE OF CLASS A, WHICHEVER PRODUCES SEVERE.
4. GRADE OF CONCERTE FOR VARIES ELEMENTS SHALL BE AS FOLLOWS:
   a) RCC BOX.....M35
   b) RCC RETAINING WALL & APPROACH SLAB.....M30
   c) PCC LEVELLING COURSE.....M15
   d) PCC CURTAIN WALL.....M20
   e) PARAPET WALL.....M30
5. GRADE OF STEEL SHALL BE Fe-500 (H.Y.S.D. REBAR CONFORMING TO IS-1786)
6. BACK FILLING BEHIND THE STRUCTURE SHALL CONSIST OF SELECTED EARTH CONFORMING TO APPENDIX 6 OF IRC:78-2014 HAVING PROPERTIES $\phi \geqslant 30^{\circ}$, C=0, $\gamma = 2.0T/M^3$
7. SOFT AND LOOSE PATCHES IN THE BEARING AREA ARE TO BE REPLACED BY COMPACTED GRANULAR FILLS WITH LAYERS NOT EXCEEDING 300MM.
8. COMPRESSIBLE FILLER BOARD SHALL BE PROVIDED IN ALL EXPANSION GAPS AND SEALED WITH POLY-SULPHIDE SEALANT.
9. THE SAFE BEARING CAPACITY AT FOUNDING LEVEL HAS BEEN CONSIDERED AS $12T^2/M$ & THE SAME SHALL BE VERIFIED BEFORE EXECUTION.
10. FOUNDATION OF BOX SHALL BE PLACED OVER A FIRM STRATA HAVING BEARING CAPACITY EQUAL TO $12T/M^2$ IN GENERAL. IF THE MATERIAL ENCOUNTERED IS SOFT , SPONZY OR OTHER UNSUITABLE SOIL, SUCH UNSUITABLE MATERIAL SHALL BE TOTALLY REMOVED TO SUCH DEPTH , WIDTH & LENGTH, AS DIRECTED BY THE ENGINEER. THE EXCAVATED AREA SHALL BE BACKFILLED WITH APPROVED GRANULAR MATERIAL & THOROUGHLY COMPACTED UP TO THE SPECIFIED LEVEL.
11. 600MM THICK FILTER MEDIA SHALL BE PROVIDED BEHIND SIDE WALLS AND WING WALLS AS PER IR:78-2014.
12. ALL THE LEVELS AND CAMBERS TO BE VERIFIED WITH RESPECT TO PLAN & PROFILE DRAWINGS BEFORE STARTING UP OF EXCAVATION. ANY DISCREPANCY NOTED SHOULD BE REPORTED TO THE DESIGN ENGINEER IMMEDIATELY.
13. BACK FILLING BEHIND WALLS SHALL BE DONE SIMULTANEOUSLY ON EITHER SIDE OF THE STRUCTURE WITH HEIGHT DIFFERENCE NOT MORE THAN 1.0M. BACK FILLING SHALL BE DONE ONLY AFTER THE TOP SLAB IS CONCRETED AND CURED FOR 14 DAYS.
14. SPRADING & COMPACTED OF SAND WILL BE DONE IN ACCORDANCE WITH CLAUSE 401.3.2 OF SPECIFICATION FOR ROAD & BRIDGE WORKS BY MINISTRY OF ROAD TRANSPORT & HIGHWAY

CLIENT :
NATIONAL HIGHWAYS AND INFRASTRUCTURE DEVELOPMENT CORPORATION LTD. (MINISTRY OF ROAD TRANSPORT AND HIGHWAYS) GOVERNMENT OF INDIA

PROJECT :
CONSULTANCY SERVICES FOR PREPARATION OF DETAILED PROJECT REPORT FOR DEVELOPMENT OF ECONOMIC CORRIDORS, INTER CORRIDORS AND FEEDER ROUTES TO IMPROVE THE EFFICIENCY OF FREIGHT MOVEMENTS IN INDIA UNDER BHARATMALA PARIYOJANA (LOT-1:PACKAGE IV)

DESIGN CONSULTANT:
VOYANTS SOLUTIONS PVT LTD.
403, 4th Floor, Park Centra, Sector-30, NH-8
Gurugram-122001, Haryana, India
CIN- U74140HR2004PTC046918
Ph: 0124-4598200, Fax: 0124-4019051,
E-mail: info@voyants.in, www.voyants.in

Detaild Project Report

REV.	DATE	DESCRIPTION

DESIGNED BY	DRAWN BY	CHECKED BY	APPROVED BY
SB	G. Das	SG	SKC
SCALE :	AS SHOWN	SHEET SIZE	A2

TITLE : GENERAL ARRANGEMENT DRAWING OF BOX CULVERT (NEW CONSTRUCTION)

DRG. No. : VSPL/1718-081/DPR/PKG-4/NH-515/SEC-1/BC-01. (Sht.1 of 3)

REVISION: R0 October, 2022

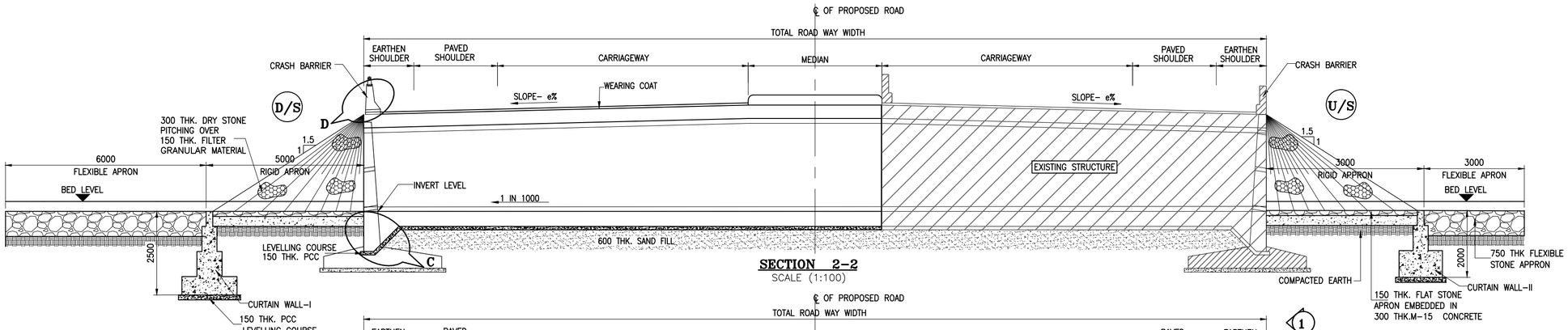

SECTION 2-2
SCALE (1:100)

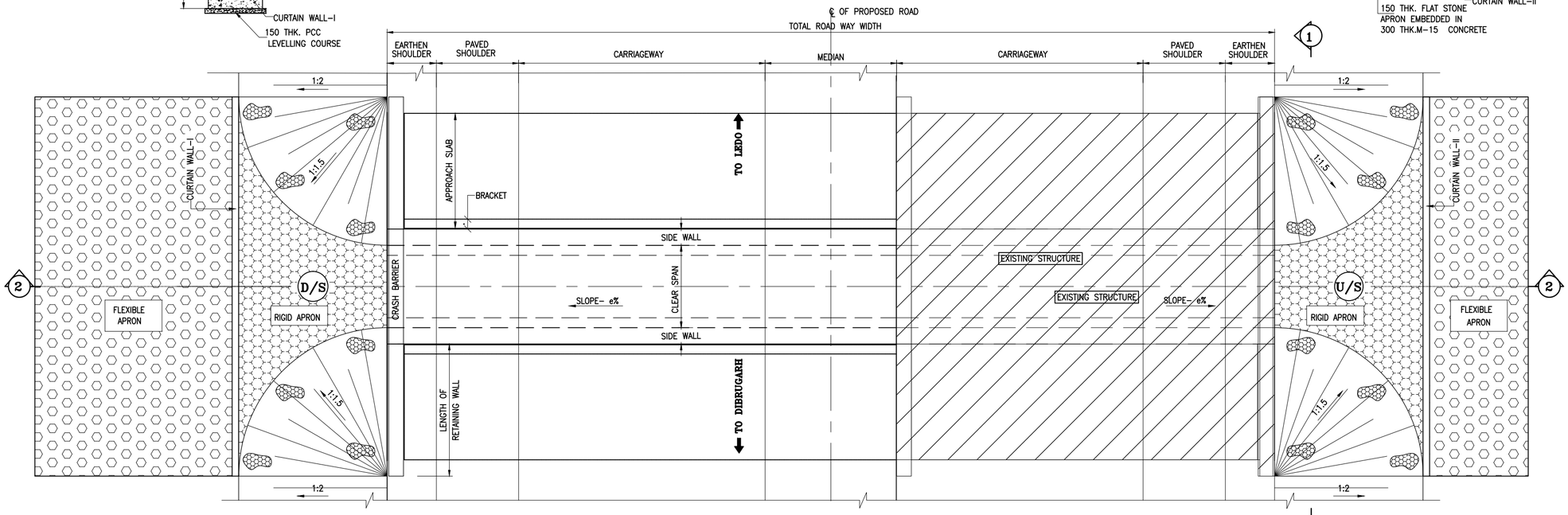

PLAN
SCALE (1:100)

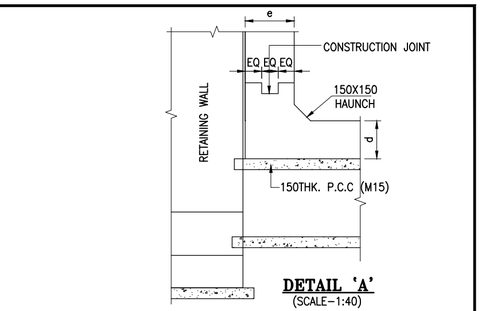

DETAIL 'A'
(SCALE-1:40)

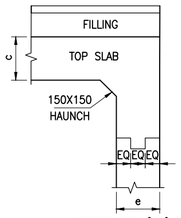

DETAIL 'B'
(SCALE-1:40)

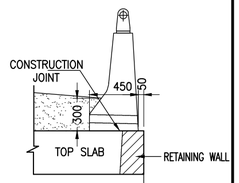

DETAIL 'D'
(SCALE-1:40)

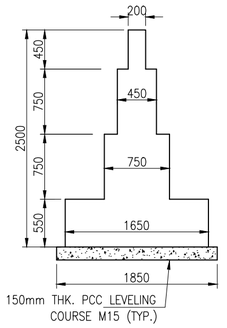

PCC CURTAIN WALL
(TYPE - I)
(SCALE 1:50)

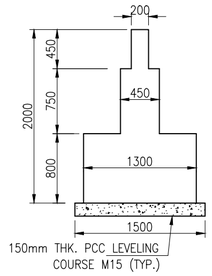

PCC CURTAIN WALL
(TYPE -II)
(SCALE 1:50)

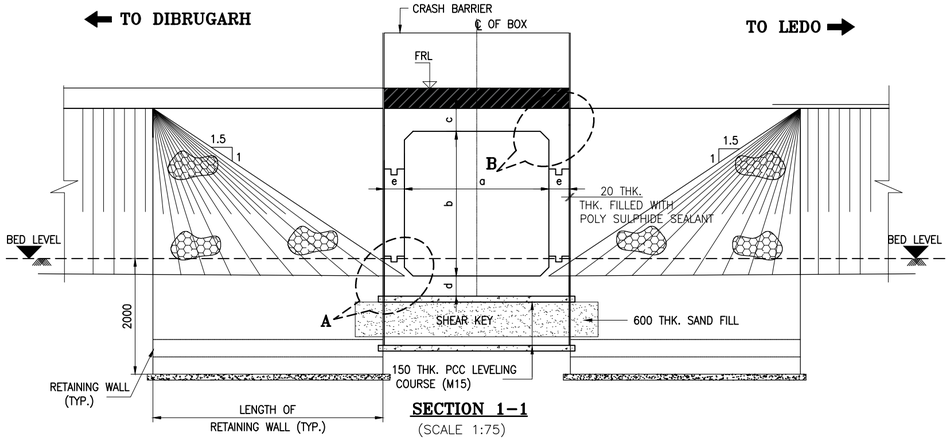

SECTION 1-1
(SCALE 1:75)

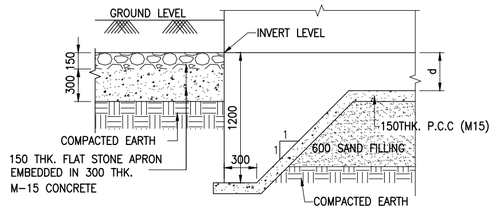

DETAIL 'C'
(SCALE-1:40)

a= CLEAR SPAN
b= CLEAR HEIGHT
c= THK. OF TOP SLAB
d= THK. OF BOTTOM SLAB
e= THK. OF SIDE WALL

NOTES:-

1. ALL DIMENSIONS ARE IN MILLIMETRES, LEVELS ARE IN METRES AND CHAINAGES ARE IN KILOMETRES, UNLESS OTHERWISE MENTIONED. ONLY WRITTEN DIMENSIONS SHALL BE FOLLOWED.
2. THIS DRAWING IS TO BE READ IN CONJUNCTION WITH THE RELEVANT HIGHWAY PLAN AND PROFILE DRAWING.
3. THE STRUCTURE IS DESIGNED FOR LIVE LOAD COMBINATION OF 3 LANE CLASS A OR 1-LANE OF 70 R+1-LANE OF CLASS A, WHICHEVER PRODUCES SEVERE.
4. GRADE OF CONCERTE FOR VARIES ELEMENTS SHALL BE AS FOLLOWS:
   a) RCC BOX.....M35
   b) RCC RETAINING WALL & APPROACH SLAB.....M30
   c) PCC LEVELLING COURSE.....M15
   d) PCC CURTAIN WALL.....M20
   e) PARAPET WALL.....M30
5. GRADE OF STEEL SHALL BE Fe-500 (H.Y.S.D. REBAR CONFORMING TO IS-1786)
6. BACK FILLING BEHIND THE STRUCTURE SHALL CONSIST OF SELECTED EARTH CONFORMING TO APPENDIX 6 OF IRC:78-2014 HAVING PROPERTIES $\phi \geqslant 30^{\circ}$, C=0, $\gamma = 2.0T/M^3$
7. SOFT AND LOOSE PATCHES IN THE BEARING AREA ARE TO BE REPLACED BY COMPACTED GRANULAR FILLS WITH LAYERS NOT EXCEEDING 300MM.
8. COMPRESSIBLE FILLER BOARD SHALL BE PROVIDED IN ALL EXPANSION GAPS AND SEALED WITH POLY-SULPHIDE SEALANT.
9. THE SAFE BEARING CAPACITY AT FOUNDING LEVEL HAS BEEN CONSIDERED AS $12T^2/M$ & THE SAME SHALL BE VERIFIED BEFORE EXECUTION.
10. FOUNDATION OF BOX SHALL BE PLACED OVER A FIRM STRATA HAVING BEARING CAPACITY EQUAL TO $12T/M^2$ IN GENERAL. IF THE MATERIAL ENCOUNTERED IS SOFT , SPONZY OR OTHER UNSUITABLE SOIL, SUCH UNSUITABLE MATERIAL SHALL BE TOTALLY REMOVED TO SUCH DEPTH , WIDTH & LENGTH, AS DIRECTED BY THE ENGINEER. THE EXCAVATED AREA SHALL BE BACKFILLED WITH APPROVED GRANULAR MATERIAL & THOROUGHLY COMPACTED UP TO THE SPECIFIED LEVEL.
11. 600MM THICK FILTER MEDIA SHALL BE PROVIDED BEHIND SIDE WALLS AND WING WALLS AS PER IR:78-2014.
12. ALL THE LEVELS AND CAMBERS TO BE VERIFIED WITH RESPECT TO PLAN & PROFILE DRAWINGS BEFORE STARTING UP OF EXCAVATION. ANY DISCREPANCY NOTED SHOULD BE REPORTED TO THE DESIGN ENGINEER IMMEDIATELY.
13. BACK FILLING BEHIND WALLS SHALL BE DONE SIMULTANEOUSLY ON EITHER SIDE OF THE STRUCTURE WITH HEIGHT DIFFERENCE NOT MORE THAN 1.0M. BACK FILLING SHALL BE DONE ONLY AFTER THE TOP SLAB IS CONCRETED AND CURED FOR 14 DAYS.
14. SPRADING & COMPACTED OF SAND WILL BE DONE IN ACCORDANCE WITH CLAUSE 401.3.2 OF SPECIFICATION FOR ROAD & BRIDGE WORKS BY MINISTRY OF ROAD TRANSPORT & HIGHWAY

CLIENT : NATIONAL HIGHWAYS AND INFRASTRUCTURE DEVELOPMENT CORPORATION LTD. (MINISTRY OF ROAD TRANSPORT AND HIGHWAYS) GOVERNMENT OF INDIA	PROJECT : CONSULTANCY SERVICES FOR PREPARATION OF DETAILED PROJECT REPORT FOR DEVELOPMENT OF ECONOMIC CORRIDORS, INTER CORRIDORS AND FEEDER ROUTES TO IMPROVE THE EFFICIENCY OF FREIGHT MOVEMENTS IN INDIA UNDER BHARATMALA PARIYOJANA (LOT-1:PACKAGE IV)	DESIGN CONSULTANT: VOYANTS SOLUTIONS PVT LTD. 403, 4th Floor, Park Centra, Sector-30, NH-8 Gurugram-122001, Haryana, India CIN- U74140HR2004PTC046918 Ph: 0124-4598200, Fax: 0124-4019051, E-mail: info@voyants.in, www.voyants.in	Detaild Project Report	DESIGNED BY: SB; DRAWN BY: G. Das; CHECKED BY: SG; APPROVED BY: SKC	TITLE : GENERAL ARRANGEMENT DRAWING OF BOX CULVERT (RETAINED +NEW CONSTRUCTION)
			REV. | DATE | DESCRIPTION	SCALE : AS SHOWN; SHEET SIZE: A2	DRG. No. : VSPL/1718-081/DPR/PKG-4/NH-515/SEC-1/BC-01. (Sht.2 of 3)
					REVISION: R0; October, 2022

Culvert List : NH-515_PKG-1

Sl. No.	Chainage (km)		Existing Details			Improvement Proposal	Proposed Details			
	Existing	Design	Type	Span	Width (m)		Type	Span	TCS Type	Width
1	2+940	2+970	Slab	1X2.5		Reconstuction	Box	1 x 3.0 x 1.5	Type - 03	24.5
2	-	3+470	-	-	-	New construction	Box	1 x 2.0 x 2.0	Type - 03	24.5
3	4+475	4+505	Slab	1X6.0	12.2	Retain & widen	Box	1 x 6.0 x 3.0	Type - 02	12.3
4	-	5+055	-	-	-	New construction	Box	1 x 2.0 x 2.0	Type - 02	24.5
5	-	5+805	-	-	-	New construction	Box	1 x 2.0 x 2.0	Type - 03	24.5
6	-	6+455	-	-	-	New construction	Box	1 x 2.0 x 2.0	Type - 03	24.5
7	-	7+305	-	-	-	New construction	Box	1 x 2.0 x 2.0	Type - 01A	24.5
8	-	8+381	-	-	-	New construction	Box	1 x 2.0 x 2.0	Type - 03	24.5
9	-	8+931	-	-	-	New construction	Box	1 x 2.0 x 2.0	Type - 03	24.5
10	9+680	9+662	Box	1X2.7	11.7	Reconstuction	Box	1 x 3.0 x 1.5	Type - 03	24.5
11	-	10+312	-	-	-	New construction	Box	1 x 2.0 x 2.0	Type - 02	24.5
12	12+510	12+542	Box	1X6.0	12.1	Retain & widen	Box	1 x 6.0 x 3.0	Type - 01A	12.4
13	12+740	12+766	Box	1X3.5	12.1	Reconstuction	Box	1 x 4.0 x 2.0	Type - 02	24.5
14	13+159	13+185	Pipe	1x0.6	20.0	Reconstuction	Box	1 x 3.0 x 2.0	Type - 01	24.5
15	13+555	13+589	Box	1X3.1	13.3	Reconstuction	Box	1 x 3.0 x 2.0	Type - 02	24.5
16	-	14+189	-	-	-	New construction	Box	1 x 2.0 x 2.0	Type - 03	24.5
17	14+860	14+888	Slab	1X3.0	12.4	Retain & widen	Box	1 x 3.0 x 2.0	Type - 02	12.1
18	-	15+238	-	-	-	New construction	Box	1 x 2.0 x 2.0	Type - 02	24.5
19	15+640	15+667	Slab	1X3.0	14.0	Reconstuction	Box	1 x 3.0 x 1.5	Type - 02	24.5
20	-	16+417	-	-	-	New construction	Box	1 x 2.0 x 2.0	Type - 02	24.5
21	-	16+767	-	-	-	New construction	Box	1 x 2.0 x 2.0	Type - 01	24.5
22	17+170	17+194	Slab	1X3.	12.0	Reconstuction	Box	1 x 3.0 x 1.5	Type - 02	24.5
23	-	17+844	-	-	-	New construction	Box	1 x 2.0 x 2.0	Type - 02	24.5
24	-	18+344	-	-	-	New construction	Box	1 x 2.0 x 2.0	Type - 02	24.5
25	-	18+744	-	-	-	New construction	Box	1 x 2.0 x 2.0	Type - 01	24.5
26	19+160	19+189	Slab	1X2.0	12.0	Reconstuction	Box	1 x 3.0 x 2.5	Type - 02	24.5
27	20+125	20+154	Box	1X2.5	33.2	Retain	Box	1 x 3.0 x 2.5	Type - 02	
28	-	20+704	-	-	-	New construction	Box	1 x 2.0 x 2.0	Type - 03	24.5
29	-	21+850	-	-	-	New construction	Box	1 x 2.0 x 2.0	Type - 02	24.5
30	24+325	24+358	Box	1X2.5	12.4	Reconstuction	Box	1 x 3.0 x 3.0	Type - 02	24.5
31	24+670	24+692	Slab	1X3.0	12.0	Reconstuction	Box	1 x 3.0 x 2.0	Type - 02	24.5
32	-	25+042	-	-	-	New construction	Box	1 x 2.0 x 2.0	Type - 02	24.5
33	-	26+214	-	-	-	New construction	Box	1 x 2.0 x 2.0	Type - 03	24.5
34	-	27+389	-	-	-	New construction	Box	1 x 2.0 x 2.0	Type - 02	24.5

CLIENT :

NATIONAL HIGHWAYS AND INFRASTRUCTURE DEVELOPMENT CORPORATION LTD. (MINISTRY OF ROAD TRANSPORT AND HIGHWAYS) GOVERNMENT OF INDIA

PROJECT :

CONSULTANCY SERVICES FOR PREPARATION OF DETAILED PROJECT REPORT FOR DEVELOPMENT OF ECONOMIC CORRIDORS, INTER CORRIDORS AND FEEDER ROUTES TO IMPROVE THE EFFICIENCY OF FREIGHT MOVEMENTS IN INDIA UNDER BHARATMALA PARIYOJANA (LOT-1:PACKAGE IV)

DESIGN CONSULTANT:

VOYANTS SOLUTIONS PVT LTD.
403, 4th Floor, Park Centra, Sector-30, NH-8
Gurugram-122001, Haryana, India
CIN- U74140HR2004PTC046918
Ph: 0124-4598200, Fax: 0124-4019051,
E-mail: info@voyants.in, www.voyants.in

Detaild Project Report

REV.	DATE	DESCRIPTION

DESIGNED BY	DRAWN BY	CHECKED BY	APPROVED BY
SB	G. Das	SG	SKC
SCALE :	AS SHOWN	SHEET SIZE	A2

TITLE : GENERAL ARRANGEMENT DRAWING OF BOX CULVERT (NEW CONSTRUCTION)

DRG. No. : VSPL/1718-081/DPR/PKG-4/NH-515/SEC-1/BC-01. (Sht.3 of 3)

REVISION: R0 October, 2022

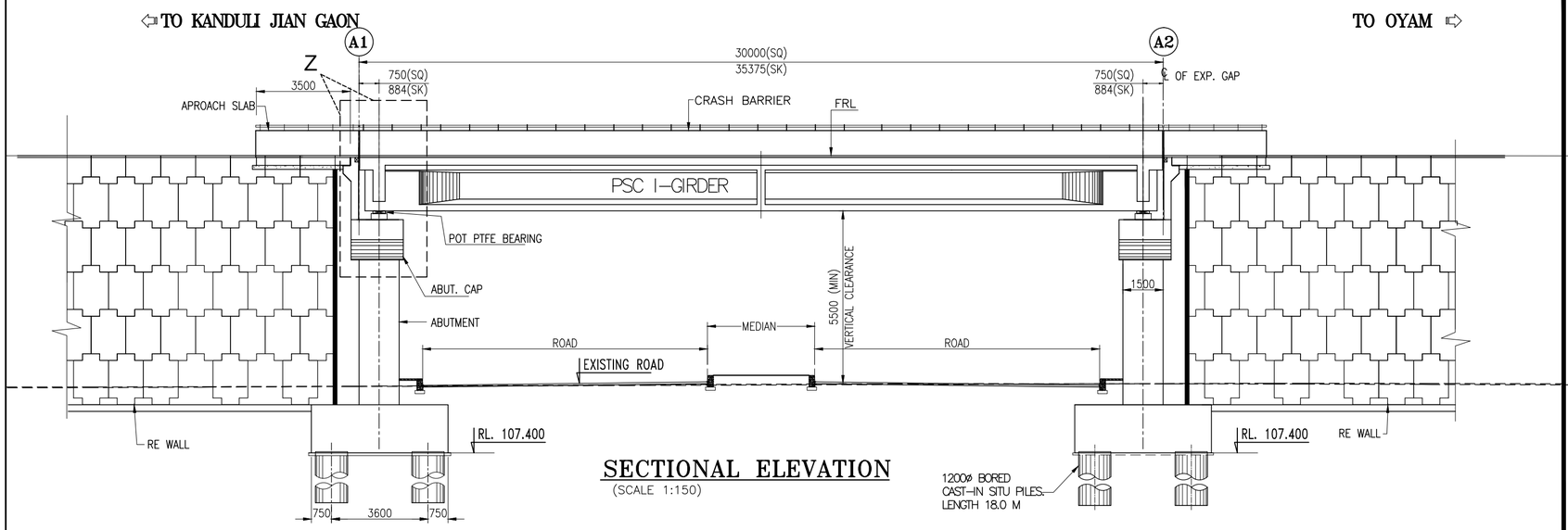

SECTIONAL ELEVATION
(SCALE 1:150)

FRL (m)	118.859	118.867	118.859
EGL (m)	109.629	109.762	109.879
CHAINAGE (Km)	3+585.00	3+600.00	3+615.00

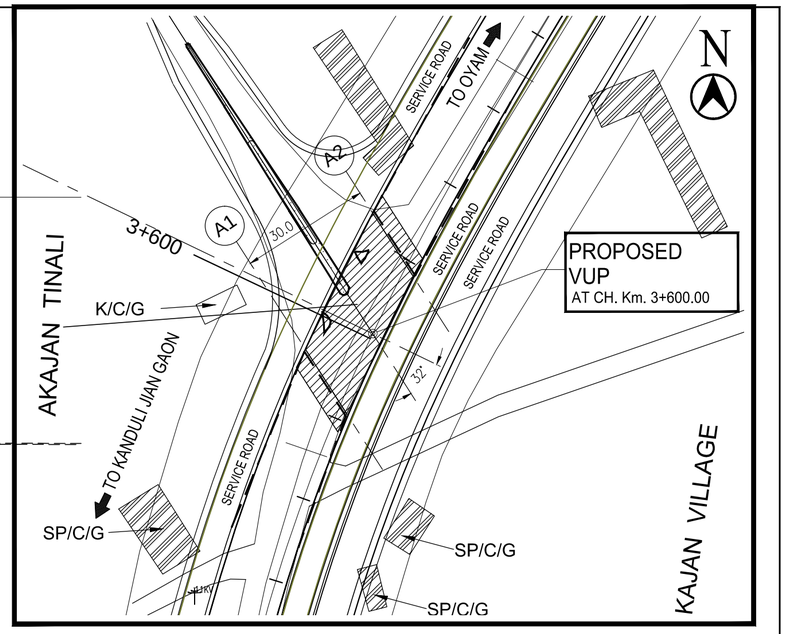

KEY PLAN
(Scale 1:750)

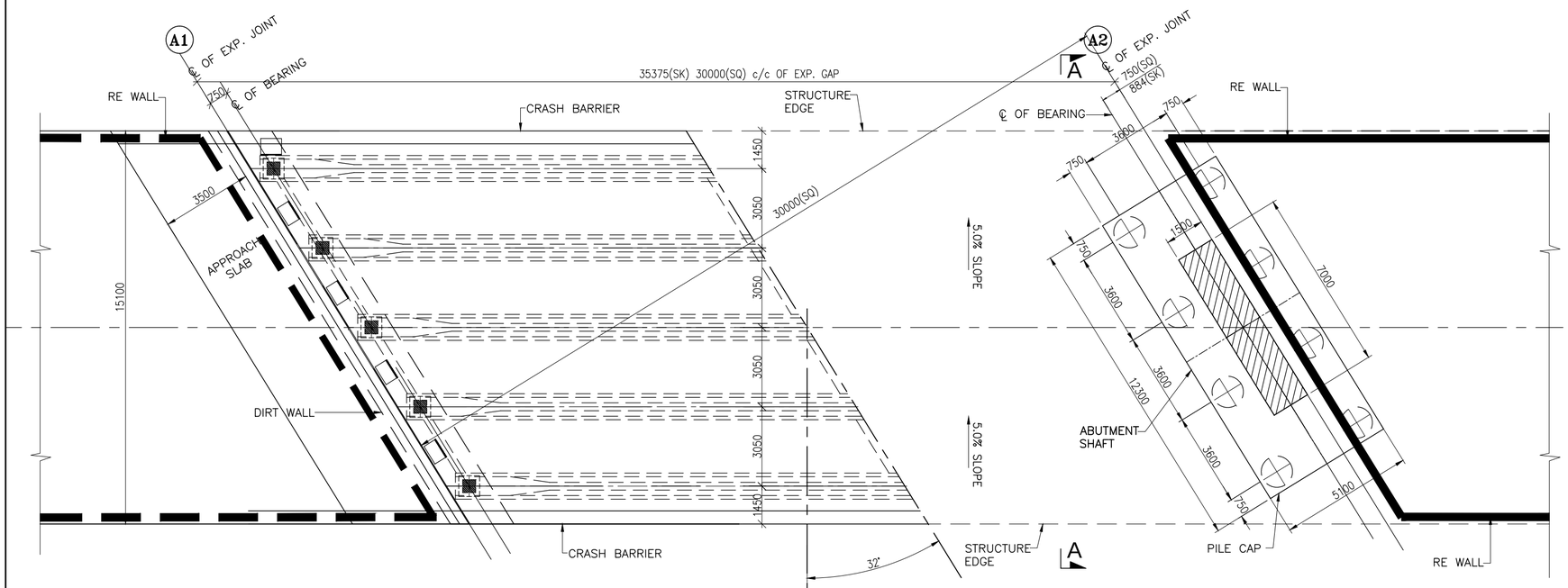

HALF TOP PLAN AT DECK LEVEL | HALF BOTTOM PLAN AT FOUNDATION LEVEL

P L A N
(SCALE 1:150)

NOTES :-

1. ALL DIMENSIONS ARE IN MM AND LEVELS ARE IN M UNLESS MENTIONED OTHERWISE.
2. DIMENSIONS ARE NOT TO BE SCALED, ONLY WRITTEN DIMENSIONS ARE TO BE FOLLOWED.
3. THE LAYOUT OF THE STRUCTURE SHALL BE SET WITH RESPECT TO THE RELEVANT HIGHWAY PROFILE.
4. ALL CONCRETE SHALL BE DESIGN MIX & MINIMUM GRADE OF WHICH IN VARIOUS COMPONENTS SHALL BE AS FOLLOWS :-

PSC GIRDER	M45
RCC SLAB OVER PSC GIRDER	M45
RCC CRASH BARRIER AND PEDESTAL	M35
RCC SUBSTRUCTURE	M35
PILE CAP & PILE	M35
APPROACH SLAB	M30
PCC LEVELING COURSE	M15

5. HIGH STRENGTH DEFORMED BARS SHALL BE OF GRADE Fe500 CONFORMING TO IS: 1786-1985
6. DESIGN OF STRUCTURE IS BASED ON LIVE LOAD COMBINATION OF 4-LANES OF CLASS A OR 2-LANE OF 70R OR 2-LANE OF CLASS A + 1-LANE OF 70R OR IRC SV WHICHEVER PRODUCE SEVER EFFECT.
7. THE FORMATION LEVEL GIVEN IN THIS DRAWING SHALL BE VERIFIED FROM THE RELEVANT HIGHWAY DRAWING. IN CASE OF ANY DISCREPANCY THE HIGHWAY DRAWING SHALL BE CONSIDERED CORRECT.

CLIENT :

NATIONAL HIGHWAYS AND INFRASTRUCTURE DEVELOPMENT CORPORATION LTD.
(MINISTRY OF ROAD TRANSPORT AND HIGHWAYS)
GOVERNMENT OF INDIA

PROJECT :

CONSULTANCY SERVICES FOR PREPARATION OF DETAILED PROJECT REPORT FOR DEVELOPMENT OF ECONOMIC CORRIDORS, INTER CORRIDORS AND FEEDER ROUTES TO IMPROVE THE EFFICIENCY OF FREIGHT MOVEMENTS IN INDIA UNDER BHARATMALA PARIYOJANA (LOT-1:PACKAGE II)

DESIGN CONSULTANT:

VOYANTS SOLUTIONS PVT LTD.
403, 4th Floor, Park Centra,
Sector-30, NH-8
Gurugram-122001, Haryana, India
CIN- U74140HR2004PTC046918
Ph: 0124-4598200, Fax: 0124-4019051,
E-mail: info@voyants.in, www.voyants.in

Detailed Project Report

REV.	DATE	DESCRIPTION

DESIGNED BY	DRAWN BY	CHECKED BY	APPROVED BY
SLM	G.Das	MK	SKC
SCALE :	AS SHOWN	SHEET SIZE	A2

TITLE :
GENERAL ARRANGEMENT DRAWING OF VEHICULAR UNDERPASS AT KM. CH. 3+600.00

DRG. No. :
VSPL/1718-081/DPR/PKG-4/NH-515/SEC-1/VUP-01(Sht. 1 of 2)

REVISION: R0 | October, 2022

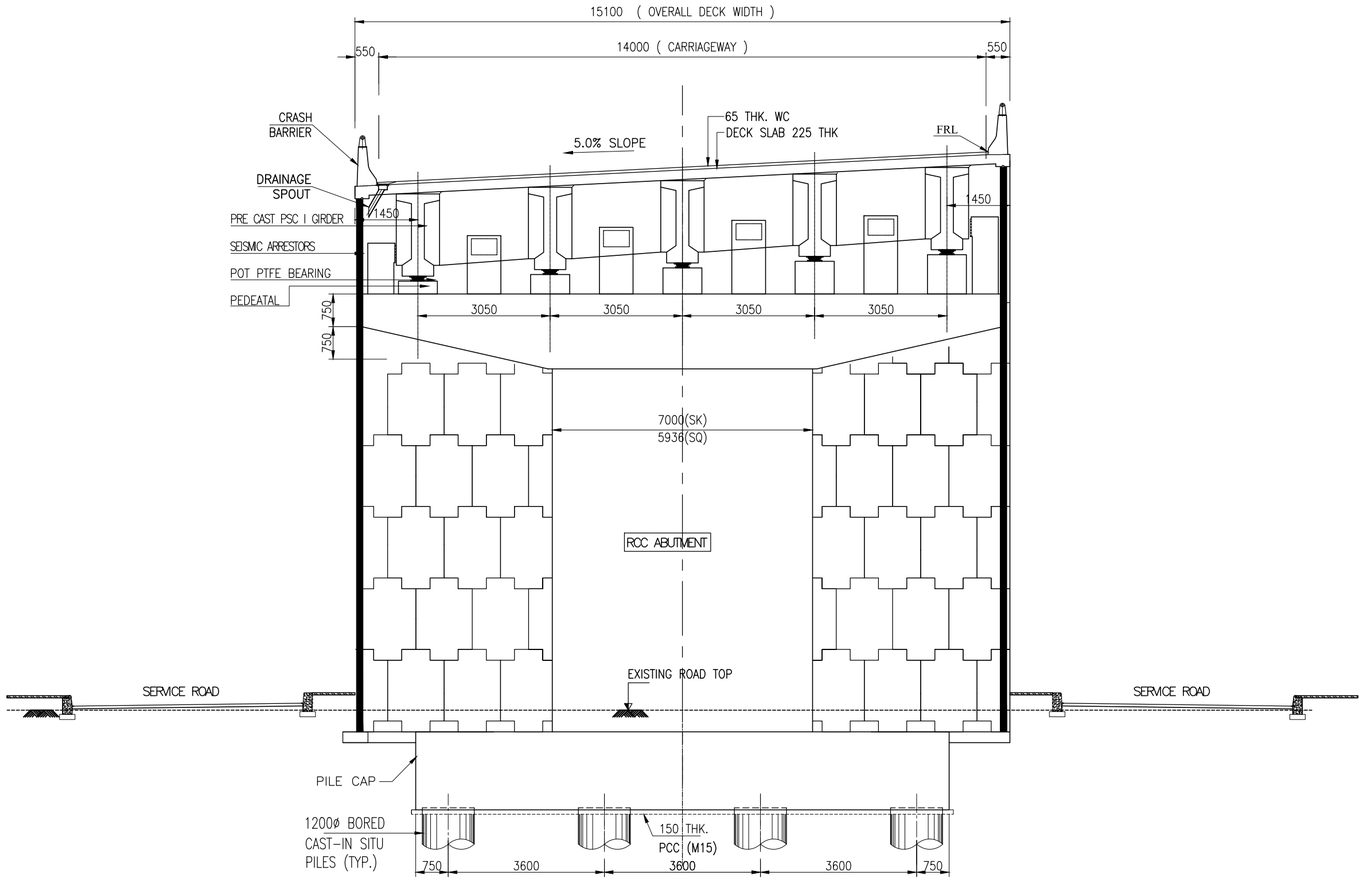

SECTION A - A

(SCALE 1:100)

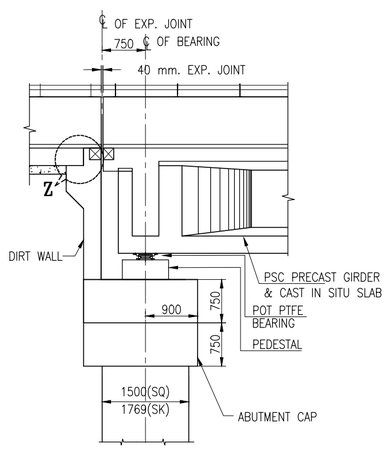

DETAIL - X

(SCALE 1:75)

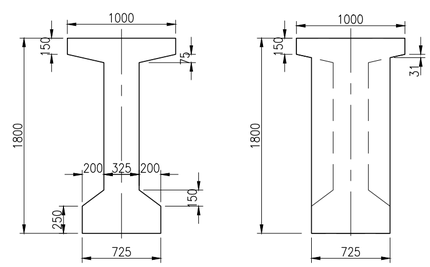

SECTION AT MID SECTION AT END

DETAILS FOR PRECAST RCC I GIRDER

(SCALE 1:40)

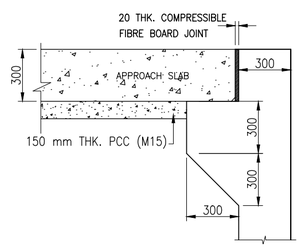

DETAILS - Z

(SCALE 1:25)

NOTES:

1. ALL DIMENSIONS ARE IN MILLIMETRES UNLESS OTHERWISE STATED.
2. DIMENSIONS ARE NOT TO BE SCALED. ONLY WRITTEN DIMENSIONS SHALL BE FOLLOWED.

CLIENT :	PROJECT :	DESIGN CONSULTANT:	Detailed Project Report	DESIGNED BY	DRAWN BY	CHECKED BY	APPROVED BY	TITLE :
NATIONAL HIGHWAYS AND INFRASTRUCTURE DEVELOPMENT CORPORATION LTD. (MINISTRY OF ROAD TRANSPORT AND HIGHWAYS) GOVERNMENT OF INDIA	CONSULTANCY SERVICES FOR PREPARATION OF DETAILED PROJECT REPORT FOR DEVELOPMENT OF ECONOMIC CORRIDORS, INTER CORRIDORS AND FEEDER ROUTES TO IMPROVE THE EFFICIENCY OF FREIGHT MOVEMENTS IN INDIA UNDER BHARATMALA PARIYOJANA (LOT-1:PACKAGE II)	VOYANTS SOLUTIONS PVT LTD. 403, 4th Floor, Park Centra, Sector-30, NH-8 Gurugram-122001, Haryana, India CIN- U74140HR2004PTC046918 Ph: 0124-4598200, Fax: 0124-4019051, E-mail: info@voyants.in, www.voyants.in	REV. / DATE / DESCRIPTION	SLM	G.Das	MK	SKC	GENERAL ARRANGEMENT DRAWING OF VEHICULAR UNDERPASS AT KM. CH. 3+600.00
				SCALE : AS SHOWN		SHEET SIZE	A2	DRG. No. : VSPL/1718-081/DPR/PKG-4/NH-515/SEC-1/VUP-01(Sht. 2 of 2)
								REVISION: R0 October, 2022