September 2021

DETAILED PROJECT REPORT

CONSULTANCY SERVICES FOR FEASIBILITY STUDY, PREPARATION OF DETAILED PROJECT REPORT AND PROVIDING PRE-CONSTRUCTION SERVICES FOR UPGRADATION OF EXISTING 2 LANE HIGHWAY TO 4 LANE WITH PAVED SHOULDER CONFIGURATION (NH-144A) FROM KM 26.350 (KHATI CHOWK) TO KM 30.097 (HANUMAN CHOWK) OF JAMMU – AKHNOOR SECTION IN THE STATE OF JAMMU & KASHMIR ON EPC BASIS.

PACKAGE NO: NHIDCL/DPR/J&K/2016

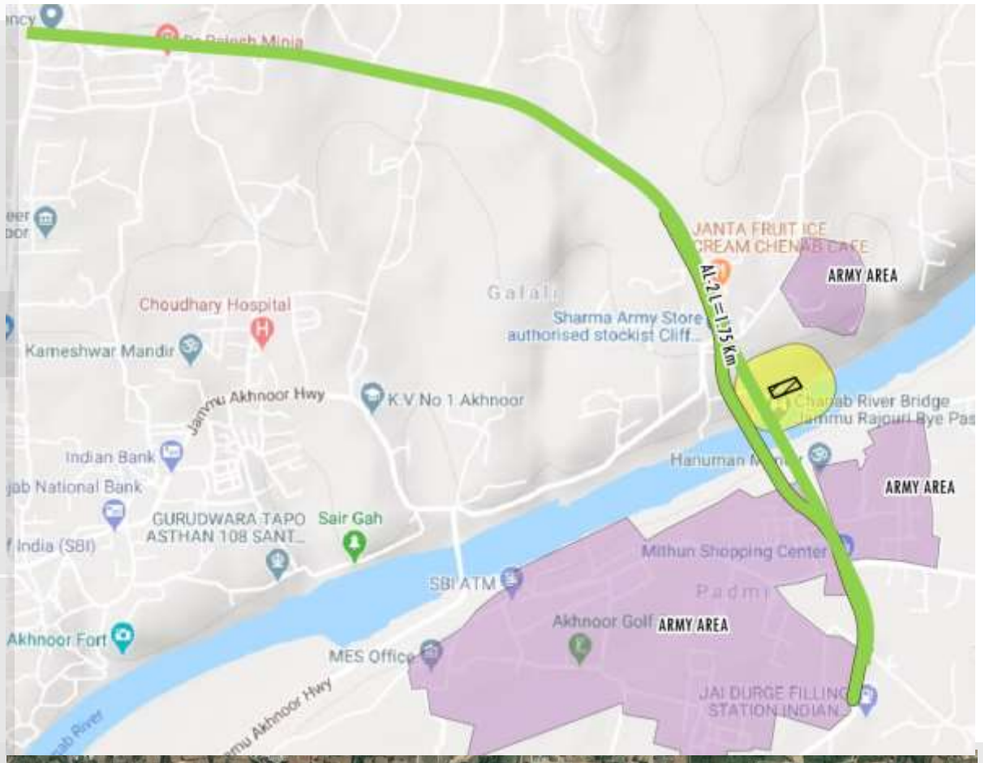

VOLUME 9: DRAWINGS

Consultant: **ANANDJIWALA INFRA ADVISORY**

9, Shivranjani Shopping Center, On 132 Feet Ring Road,
Nr. Shivranjani Cross Road, Satellite, Ahmedabad - 380 015
Email: anandjiwalainfra@gmail.com

BUILDING INFRASTRUCTURE - BUILDING THE NATION

National Highway & Infrastructure Development Corporation Ltd.
(Ministry of Road Transport & Highways)
Government of India
PTI Building, 3rd Floor, Parliament Street,
New Delhi -110001

PLAN & PROFILE

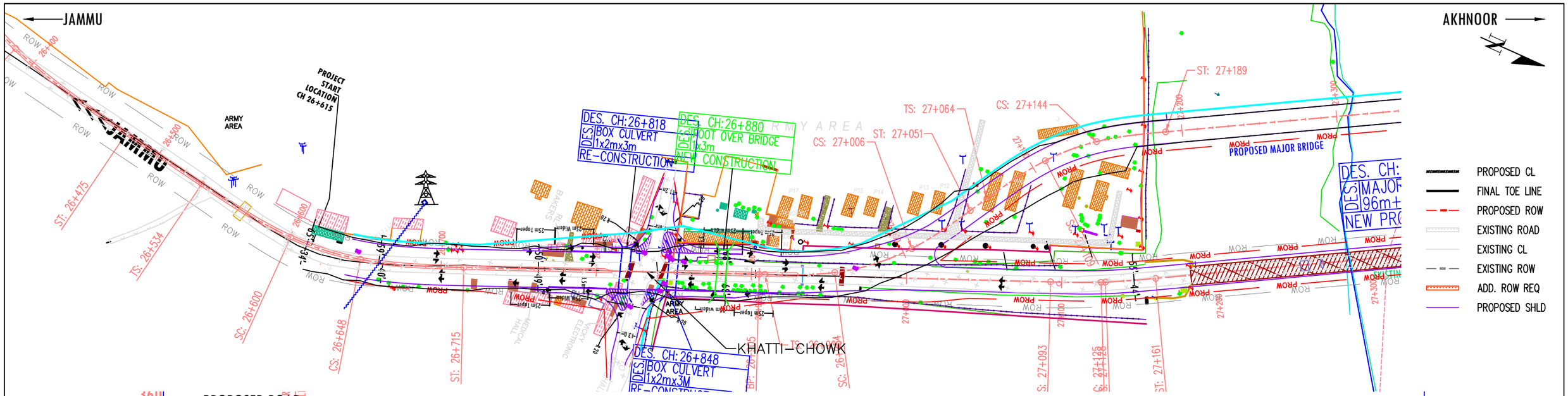

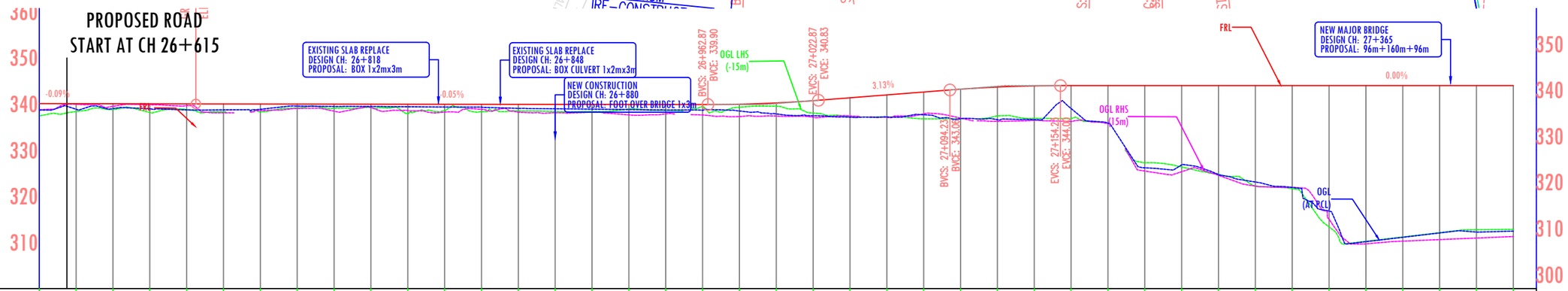

FINISHED ROAD LEVEL (m)	340.113	340.095	340.078	340.060	340.042	340.031	340.021	340.011	340.001	339.991	339.982	339.972	339.962	339.952
GROUND LEVEL AT DESIGN CL (m)	338.709	338.879	339.027	339.024	338.745	338.746	338.871	339.570	339.483	339.487	339.416	339.363	339.331	339.070
LEVEL DIFFERENCE (m)	-1.404	-1.216	-1.051	-1.036	-1.298	-1.285	-1.150	-0.442	-0.519	-0.504	-0.566	-0.609	-0.631	-0.882
GROUND LEVEL AT -15m OFFSET(m)		340.100	339.381	339.236	339.361	339.133	338.532	339.128	338.909	339.199	338.733	338.256	338.976	338.505
GROUND LEVEL AT 15m OFFSET (m)		338.618	338.896	338.200	338.862		338.544	339.277	339.145	339.672	338.490	338.948	338.301	338.562
CHAINAGE	26+600	26+620	26+640	26+660	26+680	26+700	26+720	26+740	26+760	26+780	26+800	26+820	26+840	26+860

FINISHED ROAD LEVEL (m)	339.942	339.933	339.923	339.913	339.903	339.971	340.249	340.739	341.363	341.989	342.615	343.233	343.694	343.947
GROUND LEVEL AT DESIGN CL (m)	338.981	338.906	338.817	338.701	338.666	338.504	337.870	337.476	337.161	337.218	337.686	336.815	336.617	336.626
LEVEL DIFFERENCE (m)	-0.961	-1.027	-1.106	-1.212	-1.237	-1.468	-2.379	-3.263	-4.202	-4.771	-4.929	-6.417	-7.077	-7.322
GROUND LEVEL AT -15m OFFSET(m)	338.171	338.445	338.024	338.266	337.775	337.451	337.381	337.227	337.430	337.112	337.888	336.806	336.280	336.536
GROUND LEVEL AT 15m OFFSET (m)	338.425	338.365	338.974	339.539	338.385	339.368	339.203	337.706	337.341	337.115	336.798	336.784	337.132	336.834
CHAINAGE	26+880	26+900	26+920	26+940	26+960	26+980	27+000	27+020	27+040	27+060	27+080	27+100	27+120	27+140

FINISHED ROAD LEVEL (m)	344.000	344.000	344.000	344.000	344.000	344.000	344.000	344.000	344.000	344.000	344.000	344.000	344.000
GROUND LEVEL AT DESIGN CL (m)	339.037	335.887	326.184	326.819	324.727	323.108	321.919	316.811	310.170	311.117	312.059	312.256	312.459
LEVEL DIFFERENCE (m)	-4.963	-8.113	-17.816	-17.181	-19.273	-20.892	-22.081	-27.189	-33.830	-32.883	-31.941	-31.744	-31.541
GROUND LEVEL AT -15m OFFSET(m)	336.263	335.644	325.489	325.220	324.601	322.401	322.006	315.907	310.075	309.838	310.171	310.504	310.837
GROUND LEVEL AT 15m OFFSET (m)	337.895		327.180	326.314	324.749	322.538	321.694	313.054	310.231	311.181	312.131	313.077	313.708
CHAINAGE	27+160	27+180	27+200	27+220	27+240	27+260	27+280	27+300	27+320	27+340	27+360	27+380	27+400

HORIZONTAL ALIGNMENT: Ls=66.831m | L=47.25m R=200.01m | Ls=66.831m | L=194.200m | Ls=45.000m | L=52.21m R=150.01m | Ls=45.000m | L=13.125m | Ls=45.000m | L=35.32m R=150.00m | Ls=45.000m | L=375.154m

VERTICAL ALIGNMENT: 150.00 -0.09% | 277.87 -0.05% | 60.00 | 71.36 3.13% | 60.00 | 365.00 0.00%

SUPERELEVATION: 26+600.47 -5.56% | 26+647.71 -5.56% | 26+682.71 | BNC26+698.46 -2.50% | ENC26+892.67 -2.50% | 26+908.74 | 26+953.74 -7.00% | 27+005.95 -7.00% | ENC27+048.00 | BNC27+067.02 -2.50% | 27+109.07 7.00% | 27+144.39 7.00% | 27+189.39 | BNC27+205.46 -2.50%

REV.	DATE	REVISIONS
02	09/09/2020	AL UPDATE MBR
01	11/06/2020	AL UPDATE END

CLIENT:

NATIONAL HIGHWAYS & INFRASTRUCTURE DEVELOPMENT CORPORATION LTD.
PTI BUILDING, 4 PARLIAMENT STREET
SANSAD MARG AREA, NEW DELHI - 110001

DESIGN CONSULTANT:

ANANDJIWALA INFRA ADVISORY
9, Shivranjani Shopping Center, On 132 Feet Ring Road
Nr. Shivranjani Cross Road, Satellite, Ahmedabad - 380 015
Email: anandjiwalainfra@gmail.com

PROJECT:

CONSULTANCY SERVICES FOR FEASIBILITY STUDY, PREPARATION OF DETAILED PROJECT REPORT AND PROVIDING PRE-CONSTRUCTION SERVICES FOR UPGRADATION OF EXISTING 2 LANE HIGHWAY TO 4 LANE WITH PAVED SHOULDER CONFIGURATION (NH-144A) FROM KM 26.350 (KHATI CHOWK) TO KM 30.097 (HANUMAN CHOWK) OF JAMMU - AKHNOOR SECTION IN THE UNION TERRITORY OF JAMMU & KASHMIR ON EPC BASIS

SCALE AT A3 SIZE DRAWING
HORIZ.1: 2500
20 0 20 40 60 80 100
VERT.1:1000

TITLE:

PLAN AND PROFILE

Km 26+600 to Km- 27+400

CLIENT APPROVAL:
SIGNATURE:

DWG NO:- ICS/JA/NHIDCL/FS/P&P/1

DRAWN:	CHECKED:	DESIGNED:	APPROVED:
LK	SJ	SC	LA

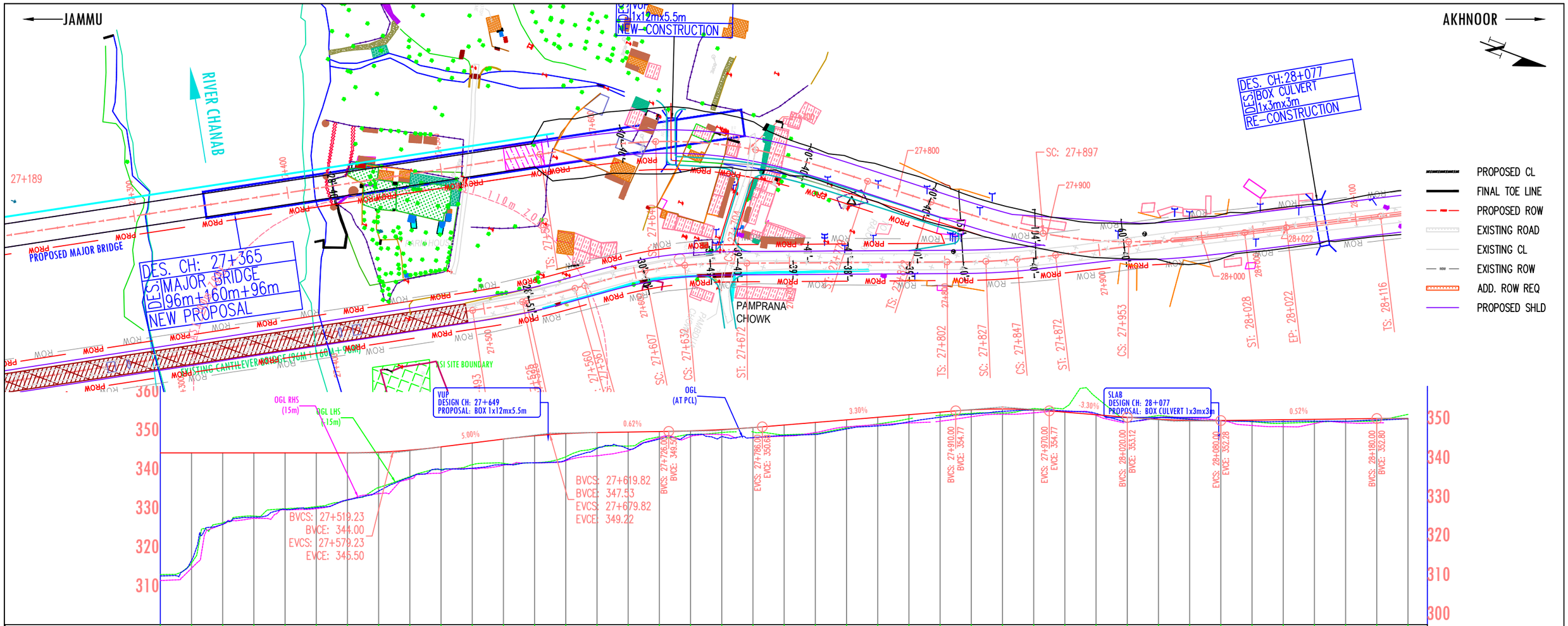

CHAINAGE	27+400	27+420	27+440	27+460	27+480	27+500	27+520	27+540	27+560	27+580	27+600	27+620	27+640
FINISHED ROAD LEVEL (m)	344.000	344.000	344.000	344.000	344.000	344.000	344.000	344.180	344.693	345.539	346.539	347.539	348.390
GROUND LEVEL AT DESIGN CL (m)	312.459	316.419	325.699	327.539	329.579	329.958	331.934	334.220	337.696	339.645	340.064	340.990	341.464
LEVEL DIFFERENCE (m)	-31.541	-27.581	-18.301	-16.461	-14.421	-14.042	-12.067	-9.959	-6.996	-5.893	-6.475	-6.549	-6.926
GROUND LEVEL AT -15m OFFSET(m)	310.837	314.625	326.074	327.322	329.471	329.778	331.963	333.565	337.017	339.924	340.018	341.074	341.476
GROUND LEVEL AT 15m OFFSET (m)	313.708	316.366	325.872	327.771	329.681	330.188	331.894	335.094	337.868	339.787	340.514	340.921	341.401

CHAINAGE	27+660	27+680	27+700	27+720	27+740	27+760	27+780	27+800	27+820	27+840	27+860	27+880	27+900	27+920
FINISHED ROAD LEVEL (m)	348.949	349.216	349.340	349.464	349.631	349.970	350.487	351.138	351.798	352.458	353.118	353.778	354.438	355.043
GROUND LEVEL AT DESIGN CL (m)	342.149	345.111	345.011	347.550	348.642	348.190	347.913	348.451	348.722	350.139	350.921	351.951	353.139	353.911
LEVEL DIFFERENCE (m)	-6.800	-4.105	-4.329	-1.914	-0.989	-1.779	-2.574	-2.688	-3.077	-2.320	-2.197	-1.827	-1.300	-1.132
GROUND LEVEL AT -15m OFFSET(m)	341.967	343.697	344.519	347.604	348.290	348.572	347.846	348.352	348.925	350.565	351.115	351.465	352.324	353.507
GROUND LEVEL AT 15m OFFSET (m)	343.141	345.012	345.643	348.127	348.584	349.125	348.822	348.606	348.894	350.298	351.310	352.545	353.533	354.211

CHAINAGE	27+940	27+960	27+980	28+000	28+020	28+040	28+060	28+080	28+100	28+120	28+140	28+160	28+180	28+200
FINISHED ROAD LEVEL (m)	355.263	355.043	354.438	353.778	353.118	352.586	352.307	352.284	352.387	352.491	352.594	352.698	352.801	352.792
GROUND LEVEL AT DESIGN CL (m)	354.638	354.976	354.748	354.088	351.806	353.011	352.593	352.244	352.054	352.042	352.131	352.111	352.422	352.737
LEVEL DIFFERENCE (m)	-0.625	-0.068	0.309	0.310	-1.313	0.425	0.286	-0.040	-0.334	-0.449	-0.463	-0.587	-0.379	-0.055
GROUND LEVEL AT -15m OFFSET(m)	353.943	354.562	354.944	354.179		352.898	352.837	352.264	351.176	350.921	351.732	351.790	352.130	
GROUND LEVEL AT 15m OFFSET (m)	354.410	354.468	354.807	356.896		353.509	352.547	352.058	351.966	351.670	351.842	352.146	352.324	353.777

HORIZONTAL ALIGNMENT: L=375.154m | Ls=75.000m | L=64.75m R=300.01m | Ls=75.000m | L=43.026m | Ls=75.000m | L=55.46m R=300.00m | Ls=75.000m | L=88.285m | Ls=102.000m

VERTICAL ALIGNMENT: 365.00 0.00% | 60.00 | 40.59 5.00% | 60.00 | 46.18 0.62% | 60.00 | 124.00 3.30% | 60.00 | 50.00 -3.30% | 60.00 | 100.00 0.52% | 60.00

SUPERELEVATION: ENC27+597.67 -2.50% | 27+614.54 | 27+639.54 3.70% | 27+704.29 3.70% | 27+729.29 | BNC27+746.16 -2.50% | ENC27+855.44 -2.50% | 27+872.31 | 27+897.31 -3.70% | 27+952.77 3.70% | 27+977.77 | BNC27+994.64 -2.50% | ENC28+166.51 -2.50% | 28+183.05

REV.	DATE	REVISIONS
02	09/09/2020	AL UPDATE MBR
01	11/06/2020	AL UPDATE END

CLIENT:

NATIONAL HIGHWAYS & INFRASTRUCTURE DEVELOPMENT CORPORATION LTD.
PTI BUILDING, 4 PARLIAMENT STREET
SANSAD MARG AREA, NEW DELHI - 110001
NHIDCL
BUILDING INFRASTRUCTURE - BUILDING THE NATION

DESIGN CONSULTANT:

ANANDJIWALA INFRA ADVISORY
9, Shivranjani Shopping Center, On 132 Feet Ring Road
Nr. Shivranjani Cross Road, Satellite, Ahmedabad - 380 015
Email: anandjiwalainfra@gmail.com

PROJECT:

CONSULTANCY SERVICES FOR FEASIBILITY STUDY, PREPARATION OF DETAILED PROJECT REPORT AND PROVIDING PRE-CONSTRUCTION SERVICES FOR UPGRADATION OF EXISTING 2 LANE HIGHWAY TO 4 LANE WITH PAVED SHOULDER CONFIGURATION (NH-144A) FROM KM 26.350 (KHATI CHOWK) TO KM 30.097 (HANUMAN CHOWK) OF JAMMU - AKHNOOR SECTION IN THE UNION TERRITORY OF JAMMU & KASHMIR ON EPC BASIS

SCALE AT A3 SIZE DRAWING
HORIZ.1: 2500
20 0 20 40 60 80 100
VERT.1:1000

TITLE:

PLAN AND PROFILE

Km 27+000 to Km 27+800

CLIENT APPROVAL:
SIGNATURE:
DWG NO:- ICS/JA/NHIDCL/FS/P&P/2

DRAWN:	CHECKED:	DESIGNED:	APPROVED:
LK	SJ	SC	LA

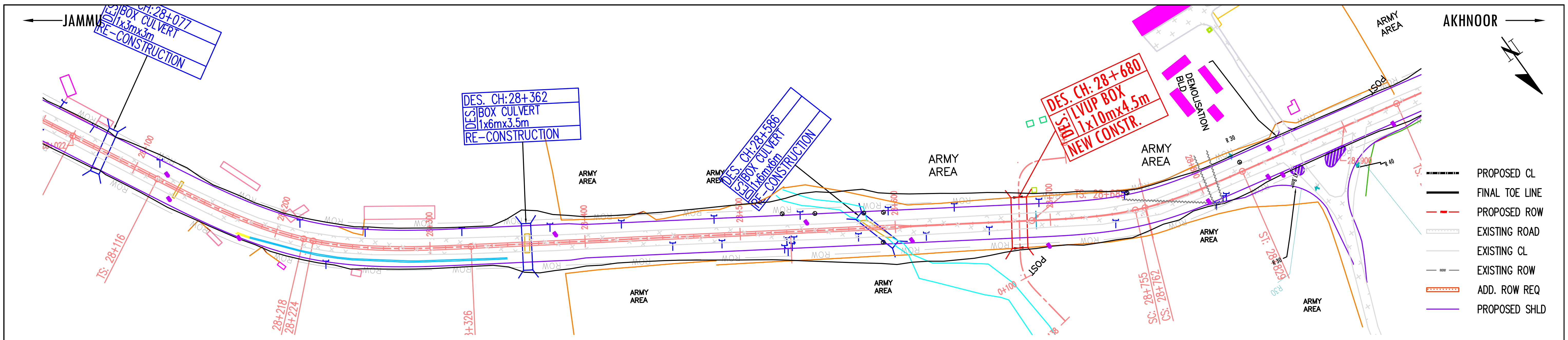

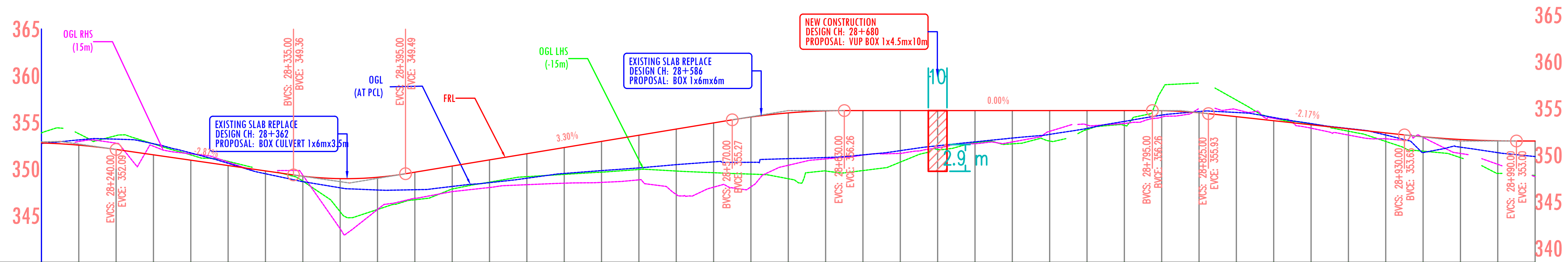

CHAINAGE	28+200	28+220	28+240	28+260	28+280	28+300	28+320	28+340	28+360	28+380	28+400	28+420	28+440	28+460
FINISHED ROAD LEVEL (m)	352.792	352.556	352.095	351.520	350.945	350.370	349.795	349.233	348.967	349.113	349.657	350.317	350.977	351.637
GROUND LEVEL AT DESIGN CL (m)	352.737	353.118	353.199	352.705	351.720	350.609	349.492	348.645	347.986	347.752	347.781	348.133	348.538	349.012
LEVEL DIFFERENCE (m)	-0.055	0.561	1.104	1.185	0.775	0.239	-0.304	-0.588	-0.981	-1.361	-1.876	-2.184	-2.439	-2.625
GROUND LEVEL AT -15m OFFSET(m)		353.031	352.964	352.228	351.344	350.453		348.734	344.330	345.854	346.901	347.659	348.169	348.489
GROUND LEVEL AT 15m OFFSET (m)	353.777	353.379	353.432	352.746	351.633	350.788		348.994	346.049	346.193	346.975	347.859	348.608	349.097

CHAINAGE	28+480	28+500	28+520	28+540	28+560	28+580	28+600	28+620	28+640	28+660	28+680	28+700	28+720	28+740
FINISHED ROAD LEVEL (m)	352.297	352.957	353.617	354.277	354.937	355.569	356.009	356.229	356.257	356.257	356.257	356.257	356.257	356.257
GROUND LEVEL AT DESIGN CL (m)	349.523	349.829	350.116	350.466	350.763	350.718	351.109	351.230	351.514	351.968	352.488	352.910	353.317	353.710
LEVEL DIFFERENCE (m)	-2.774	-3.127	-3.501	-3.810	-4.174	-4.851	-4.900	-4.999	-4.742	-4.289	-3.769	-3.347	-2.940	-2.547
GROUND LEVEL AT -15m OFFSET(m)	348.649	348.724	349.095	348.483	348.218	347.661	350.198	351.077	351.496	351.718	352.315	352.654	352.884	353.730
GROUND LEVEL AT 15m OFFSET (m)	349.336	349.669	349.929	349.863	349.727	349.730	348.511	349.917	350.201	350.961	352.134	352.820	353.004	353.264

CHAINAGE	28+760	28+780	28+800	28+820	28+840	28+860	28+880	28+900	28+920	28+940	28+960	28+980	29+000
FINISHED ROAD LEVEL (m)	356.257	356.257	356.248	356.031	355.605	355.171	354.737	354.303	353.868	353.452	353.163	353.018	353.000
GROUND LEVEL AT DESIGN CL (m)	354.348	355.098	355.775	356.159	356.057	355.519	354.868	354.338	353.643	351.763	352.339	351.752	351.333
LEVEL DIFFERENCE (m)	-1.909	-1.158	-0.473	0.128	0.451	0.348	0.131	0.035	-0.225	-1.689	-0.824	-1.266	-1.667
GROUND LEVEL AT -15m OFFSET(m)	354.556	354.900	355.578		356.303	355.233	354.505	353.795	353.081	353.193	351.641	350.792	349.501
GROUND LEVEL AT 15m OFFSET (m)	354.353	354.925	357.544		357.079	355.409	354.786	354.108	353.080	351.936	351.381		349.790

HORIZONTAL ALIGNMENT: Ls=102.000m L=6.41m R=210.01m Ls=102.000m L=361.658m Ls=67.000m L=6.45m R=200.00m Ls=67.000m L=108.529m Ls=27.000m L=7.36m R=800.00m Ls=27.000m L=97.509m

VERTICAL ALIGNMENT: 60.00 | 95.00 -2.87% | 60.00 | 175.00 3.30% | 60.00 | 165.00 0.00% | 30.00 | 105.00 -2.17% | 60.00 | 170.00 0.00%

SUPERELEVATION: 28+218.05 28+224.46 5.29% 28+259.46 BNC28+275.99 -2.50% ENC28+704.36 -2.50% 28+720.11 28+755.11 28+761.56 -5.56% 28+796.56 BNC28+812.31 -2.50% ENC28+913.00 -2.50% 28+934.09 28+964.09 28+971.44 3.56%

REV.	DATE	REVISIONS
02	09/09/2020	AL UPDATE MBR
01	11/06/2020	AL UPDATE END

CLIENT:

**NATIONAL HIGHWAYS & INFRASTRUCTURE
DEVELOPMENT CORPORATION LTD.
PTI BUILDING, 4 PARLIAMENT STREET
SANSAD MARG AREA, NEW DELHI - 110001**

NHIDCL
BUILDING INFRASTRUCTURE - BUILDING THE NATION

DESIGN CONSULTANT:

ANANDJIWALA INFRA ADVISORY
9, Shivranjani Shopping Center, On 132 Feet Ring Road
Nr. Shivranjani Cross Road, Satellite, Ahmedabad - 380 015
Email: anandjiwalainfra@gmail.com

PROJECT:

CONSULTANCY SERVICES FOR FEASIBILITY STUDY, PREPARATION OF DETAILED PROJECT REPORT AND PROVIDING PRE-CONSTRUCTION SERVICES FOR UPGRADATION OF EXISTING 2 LANE HIGHWAY TO 4 LANE WITH PAVED SHOULDER CONFIGURATION (NH-144A) FROM KM 26.350 (KHATI CHOWK) TO KM 30.097 (HANUMAN CHOWK) OF JAMMU - AKHNOOR SECTION IN THE UNION TERRITORY OF JAMMU & KASHMIR ON EPC BASIS

SCALE AT A3 SIZE DRAWING
HORIZ.1: 2500
20 0 20 40 60 80 100
VERT.1:500

TITLE:

PLAN AND PROFILE

Km 27+800 to Km 28+600

CLIENT APPROVAL:
SIGNATURE:

DWG NO:- ICS/JA/NHIDCL/FS/P&P/3

DRAWN:	CHECKED:	DESIGNED:	APPROVED:
LK	SJ	SC	LA

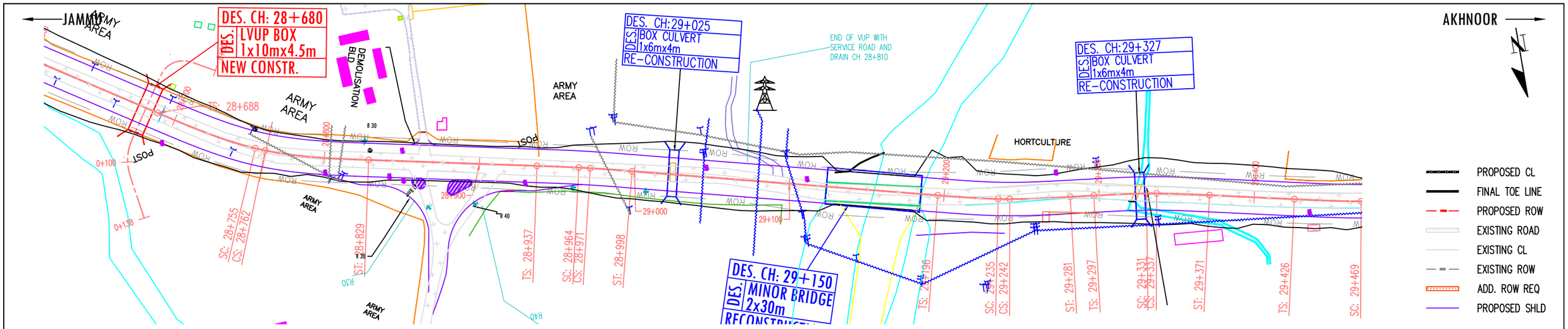

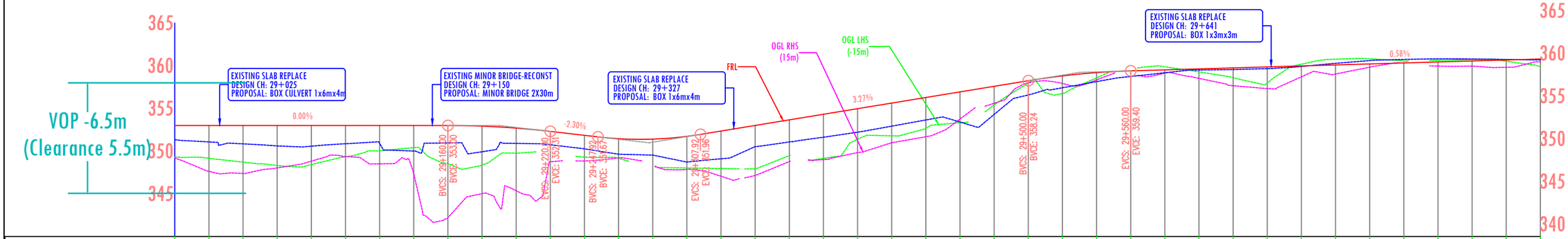

CHAINAGE	FINISHED ROAD LEVEL (m)	GROUND LEVEL AT DESIGN CL (m)	LEVEL DIFFERENCE (m)	GROUND LEVEL AT -15m OFFSET(m)	GROUND LEVEL AT 15m OFFSET (m)
29+000	353.000	351.333	-1.667	349.561	349.799
29+020	353.000	351.077	-1.923	347.891	348.894
29+040	353.000	350.852	-2.148	347.852	348.444
29+060	353.000	350.612	-2.388	348.783	348.412
29+080	353.000	350.582	-2.418	350.051	349.084
29+100	353.000	350.865	-2.135	349.809	349.896
29+120	353.000	350.916	-2.084	348.476	350.256
29+140	353.000	350.012	-2.988	346.236	350.594
29+160	353.000	350.957	-2.043	344.256	349.484
29+180	353.000	349.926	-2.997	346.306	349.243
29+200	352.923	350.905	-1.788	347.130	349.669
29+220	352.693	350.744	-1.566		
29+240	352.310	350.272	-1.578	349.295	349.469
29+260	351.850	349.644	-1.814	349.329	349.204
29+280	351.458	349.531	-1.877		
29+300	351.408	348.719	-3.010	347.913	347.609
29+320	351.729	349.104	-3.250	346.815	
29+340	352.354	350.523	-2.485	347.683	348.494
29+360	353.009	351.077	-2.586	349.163	350.067
29+380	353.663	351.630	-2.687	349.500	349.069
29+400	354.317	352.218	-2.753	349.932	350.952
29+420	354.971	352.923	-2.703	350.945	352.032
29+440	355.626	353.649	-2.631	351.772	352.951
29+460	356.280	353.408	-3.526	353.299	353.525
29+480	356.934	354.295	-3.294	355.606	354.851
29+500	357.589	356.577	-1.666	358.368	357.130
29+520	358.243	357.418	-1.389	358.057	356.867
29+540	358.807	358.136	-1.056	358.434	358.523
29+560	359.192	358.740	-0.658		
29+580	359.398	359.174	-0.339	359.151	359.716
29+600	359.514	359.501	-0.129	358.980	359.252
29+620	359.629	359.551	-0.194	358.272	358.665
29+640	359.745	359.659	-0.201	357.453	357.867
29+660	359.861	359.912	-0.065	359.125	360.022
29+680	359.977	360.282	0.190	359.009	360.792
29+700	360.092	360.600	0.392	359.993	360.886
29+720	360.208	360.736	0.412		
29+740	360.324	360.800	0.360	360.034	360.673
29+760	360.440	360.782	0.227	359.969	360.782
29+780	360.555	360.734	0.063	360.317	360.651
29+800	360.671	360.687	0.016	360.586	360.599

HORIZONTAL ALIGNMENT: L=107.589m; Ls=39.000m L=7.44m R=650.01m Ls=39.000m; L=15.623m; Ls=34.000m L=63.59m R=400.01m Ls=34.000m; L=54.759m; Ls=43.000m; L=52.11m R=500.00m; Ls=43.000m; L=117.635m; L=11.000m; L=161.71m R=2000.01m

VERTICAL ALIGNMENT: 170.00 0.00%; 60.00; 82.92 -2.30%; 60.00; 192.08 3.27%; 60.00; 315.67 0.58%

SUPERELEVATION: 29+000.44; BVCS= 29+022.53; 2.50%; EVCS= 29+199.20; 2.50%; 29+214.95; 29+234.95; 29+249.30; 3.1.80%; 29+282.38; BVCS= 29+324.13; 2.50%; EVCS= 29+392.62; 2.50%; 29+410.61; 29+434.61; 29+449.15; 2.50%; 29+513.15; BVCS= 29+575.15; 2.50%; EVCS= 29+601.41; 2.50%; 29+623.91; 29+648.91; -5.00%; 29+721.02; -5.00%; 29+764.92; BVCS= 29+788.55; 2.50%; 29+800.00

REV.	DATE	REVISIONS
02	09/09/2020	AL UPDATE MBR
01	11/06/2020	AL UPDATE END

CLIENT:
NATIONAL HIGHWAYS & INFRASTRUCTURE DEVELOPMENT CORPORATION LTD.
PTI BUILDING, 4 PARLIAMENT STREET
SANSAD MARG AREA, NEW DELHI - 110001

DESIGN CONSULTANT:
ANANDJIWALA INFRA ADVISORY
9, Shivranjani Shopping Center, On 132 Feet Ring Road
Nr. Shivranjani Cross Road, Satellite, Ahmedabad - 380 015
Email: anandjiwalainfra@gmail.com

PROJECT:
CONSULTANCY SERVICES FOR FEASIBILITY STUDY, PREPARATION OF DETAILED PROJECT REPORT AND PROVIDING PRE-CONSTRUCTION SERVICES FOR UPGRADATION OF EXISTING 2 LANE HIGHWAY TO 4 LANE WITH PAVED SHOULDER CONFIGURATION (NH-144A) FROM KM 26.350 (KHATI CHOWK) TO KM 30.097 (HANUMAN CHOWK) OF JAMMU - AKHNOOR SECTION IN THE UNION TERRITORY OF JAMMU & KASHMIR ON EPC BASIS

SCALE AT A3 SIZE DRAWING
HORIZ.1:2500
VERT.1:500

TITLE:
PLAN AND PROFILE
Km 28+600 to Km 29+400

CLIENT APPROVAL: | SIGNATURE:

DWG NO:- ICS/JA/NHIDCL/FS/P&P/4

DRAWN:	CHECKED:	DESIGNED:	APPROVED:
LK	SJ	SC	LA

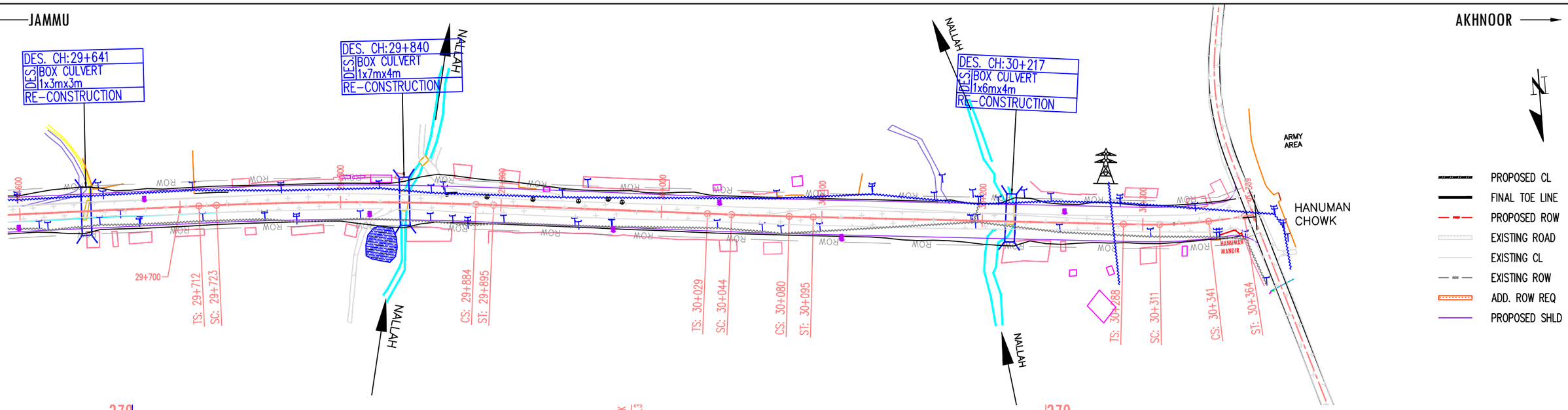

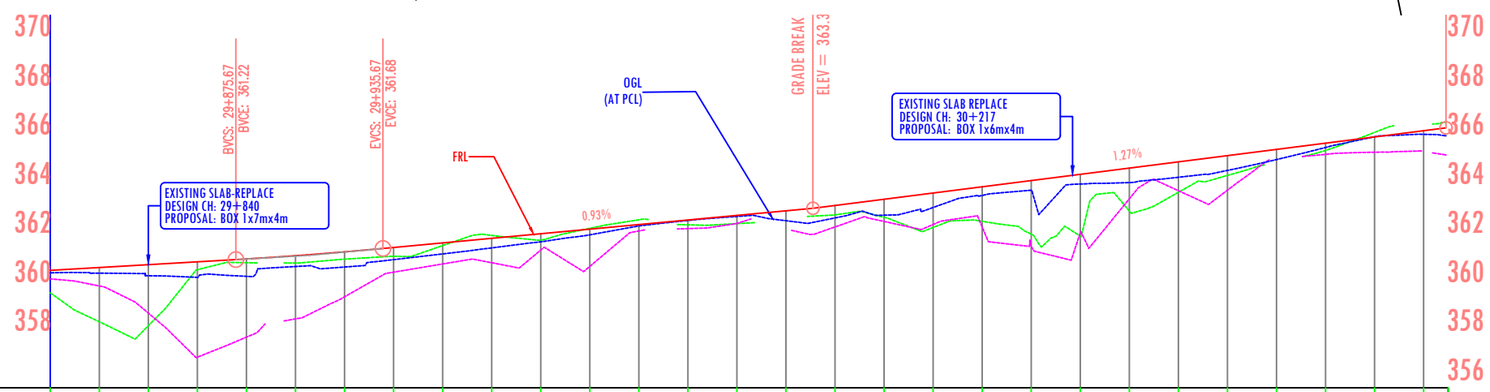

FINISHED ROAD LEVEL (m)	360.787	360.903	361.018	361.134	361.250	361.383	361.539	361.719	361.906	362.093
GROUND LEVEL AT DESIGN CL (m)	360.686	360.672	360.566	360.499	360.543	360.943	360.922	361.223	361.456	361.702
LEVEL DIFFERENCE (m)	-0.100	-0.231	-0.452	-0.635	-0.707	-0.440	-0.617	-0.496	-0.450	-0.390
GROUND LEVEL AT -15m OFFSET(m)	360.886	360.590	359.437	357.357	357.849	358.750	359.763	360.851	361.350	360.963
GROUND LEVEL AT 15m OFFSET (m)	359.999	359.049	358.421	360.846	361.009	361.010	361.153	361.281	361.584	361.994
CHAINAGE	29+800	29+820	29+840	29+860	29+880	29+900	29+920	29+940	29+960	29+980

FINISHED ROAD LEVEL (m)	362.279	362.466	362.653	362.840	363.027	363.214	363.431	363.685	363.939	364.193
GROUND LEVEL AT DESIGN CL (m)	361.949	362.233	362.596	362.820	362.984	362.809	362.923	363.035	363.348	363.838
LEVEL DIFFERENCE (m)	-0.330	-0.233	-0.057	-0.020	-0.043	-0.404	-0.507	-0.650	-0.590	-0.355
GROUND LEVEL AT -15m OFFSET(m)	361.801	361.167		362.373	362.819		363.040	363.274	363.222	363.153
GROUND LEVEL AT 15m OFFSET (m)	361.922	362.460	362.720	362.478	362.697	362.880	363.048	362.743	362.323	362.870
CHAINAGE	30+000	30+020	30+040	30+060	30+080	30+100	30+120	30+140	30+160	30+180

FINISHED ROAD LEVEL (m)	364.447	364.701	364.955	365.209	365.463	365.717	365.971	366.225	366.479	
GROUND LEVEL AT DESIGN CL (m)	364.053	364.305	364.364	364.580	364.859	365.301	365.794	366.231	366.329	
LEVEL DIFFERENCE (m)	-0.394	-0.396	-0.591	-0.629	-0.604	-0.416	-0.177	0.006	-0.150	
GROUND LEVEL AT -15m OFFSET(m)	362.894	363.219	363.958	364.449	364.159		365.691	365.760		
GROUND LEVEL AT 15m OFFSET (m)	362.314	362.301	363.551	364.048	364.671	365.266	365.699	366.443		
CHAINAGE	30+200	30+220	30+240	30+260	30+280	30+300	30+320	30+340	30+360	30+370

HORIZONTAL ALIGNMENT
L=161.71m R=2000.01m
Ls=11.000m
L=133.375m
Ls=15.000m
L=35.97m R=3000.01m
Ls=15.000m
L=193.345m
Ls=22.500m
L=30.64m R=300.01m
Ls=22.500m
6.444m

VERTICAL ALIGNMENT
315.67 0.58%
60.00
175.31 0.93%
258.14 1.27%

SUPERELEVATION
ENC30+268.66
-2.50%
30+285.54
30+310.54
-3.70%
30+341.17
-3.70%
30+366.17

REV.	DATE	REVISIONS
02	09/09/2020	AL UPDATE MBR
01	11/06/2020	AL UPDATE END

CLIENT:

**NATIONAL HIGHWAYS & INFRASTRUCTURE
DEVELOPMENT CORPORATION LTD.**
PTI BUILDING, 4 PARLIAMENT STREET
SANSAD MARG AREA, NEW DELHI - 110001
BUILDING INFRASTRUCTURE - BUILDING THE NATION

DESIGN CONSULTANT:

ANANDJIWALA INFRA ADVISORY
9, Shivranjani Shopping Center, On 132 Feet Ring Road
Nr. Shivranjani Cross Road, Satellite, Ahmedabad - 380 015
Email: anandjiwalainfra@gmail.com

PROJECT:

CONSULTANCY SERVICES FOR FEASIBILITY STUDY, PREPARATION OF DETAILED PROJECT REPORT AND PROVIDING PRE-CONSTRUCTION SERVICES FOR UPGRADATION OF EXISTING 2 LANE HIGHWAY TO 4 LANE WITH PAVED SHOULDER CONFIGURATION (NH-144A) FROM KM 26.350 (KHATI CHOWK) TO KM 30.097 (HANUMAN CHOWK) OF JAMMU - AKHNOOR SECTION IN THE UNION TERRITORY OF JAMMU & KASHMIR ON EPC BASIS

SCALE AT A3 SIZE DRAWING
HORIZ.1: 2500
20 0 20 40 60 80 100
VERT.1:250

TITLE:

PLAN AND PROFILE

Km 29+400 to Km 30+100

CLIENT APPROVAL:
SIGNATURE:
DWG NO:- ICS/JA/NHIDCL/FS/P&P/5

DRAWN:	CHECKED:	DESIGNED:	APPROVED:
LK	SJ	SC	LA

No.	PVI Station	PVI Elevation	Grade In	Grade Out	A (Grade Change)	Profile Curve Type	Profile Curve Length	K Value	Curve Radius	Design Speed
MAIN ALIGNMENT										
1	26+275.000	339.273		0.34%						
2	26+535.000	340.17	0.34%	-0.09%	0.43%					70
3	26+685.000	340.038	-0.09%	-0.05%	0.04%					70
4	26+992.870	339.887	-0.05%	3.13%	3.18%	Sag	60	18.868	1886.7756	50
5	27+124.228	344	3.13%	0.00%	3.13%	Crest	60	19.163	1916.3033	50
6	27+549.228	344	0.00%	5.00%	5.00%	Sag	90	18	1800	50
7	27+649.816	349.029	5.00%	0.62%	4.38%	Crest	100	22.825	2282.4771	80
8	27+756.000	349.686	0.62%	3.30%	2.68%	Sag	60	22.378	2237.7998	80
9	27+940.000	355.758	3.30%	-3.30%	6.60%	Crest	100	15.152	1515.1515	80
10	28+050.000	352.128	-3.30%	0.52%	3.82%	Sag	60	15.716	1571.6217	80
11	28+210.000	352.957	0.52%	-2.87%	3.39%	Crest	111	32.725	3272.4963	80
12	28+365.000	348.502	-2.87%	3.30%	6.17%	Sag	60	9.718	971.7868	80
13	28+600.000	356.257	3.30%	0.00%	3.30%	Crest	110	33.333	3333.3333	80
14	28+810.000	356.257	0.00%	-2.17%	2.17%	Crest	40	18.423	1842.2984	70
15	28+960.000	353	-2.17%	0.00%	2.17%	Sag	75	34.543	3454.3096	80
16	29+190.000	353	0.00%	-2.30%	2.30%	Crest	75	32.609	3260.8696	80
17	29+277.918	350.978	-2.30%	3.27%	5.57%	Sag	60	10.77	1076.9538	70
18	29+530.000	359.224	3.27%	0.58%	2.69%	Crest	90	33.426	3342.5958	80
19	29+905.668	361.398	0.58%	0.93%	0.36%	Sag	60	168.844	16884.4496	80
20	30+110.976	363.316	0.93%	1.27%	0.34%		30	89.314	8931.4373	80
21	30+369.113	366.594	1.27%							
2-LANE IPROVEMENT										
1	26+905.000	339.955		0.55%						
2	27+204.985	341.6	0.55%	0.00%	0.55%	Crest	60	109.417	10941.7158	80
3	27+505.771	341.6	0.00%	3.03%	3.03%	Sag	100	32.984	3298.4323	80
4	27+909.390	353.837	3.03%	0.00%	3.03%	Crest	100	32.984	3298.4323	80
5	28+021.514	353.837	0.00%							

REV.	DATE	REVISIONS

CLIENT:

NATIONAL HIGHWAYS & INFRASTRUCTURE DEVELOPMENT CORPORATION LTD.
PTI BUILDING, 4 PARLIAMENT STREET
SANSAD MARG AREA, NEW DELHI - 110001

DESIGN CONSULTANT:

ANANDJIWALA INFRA ADVISORY
9, Shivranjani Shopping Center, On 132 Feet Ring Road,
Nr. Shivranjani Cross Road, Satellite, Ahmedabad - 380 015
Email: anandjiwalainfra@gmail.com

PROJECT: **CONSULTANCY SERVICES FOR FEASIBILITY STUDY, PREPARATION OF DETAILED PROJECT REPORT AND PROVIDING PRE-CONSTRUCTION SERVICES FOR UPGRADATION OF EXISTING 2 LANE HIGHWAY TO 4 LANE WITH PAVED SHOULDER CONFIGURATION (NH-144A) FROM KM 26.350 (KHATI CHOWK) TO KM 30.097 (HANUMAN CHOWK) OF JAMMU - AKHNOOR SECTION IN THE UNION TERRITORY OF JAMMU & KASHMIR ON EPC BASIS**

SCALE: Not to scale
Dimensions as mentioned

TITLE: VERTICAL AL DETAILS

CLIENT APPROVAL: | SIGNATURE:

DWG NO:– ICS/JA/NHIDCL/FS/TCS/

DRAWN:	CHECKED:	DESIGNED:	APPROVED:
LK	SJ	SC	LA

HIP No	HIP Point	Type	Start Station	Start Point	End Station	End Point	Length	Design Speed	Radius	Trans Length	Hand of Arc	Super Elevation
MAIN ALIGNMENT												
		Line	26+127.591	(477923.9534,3639446.3867)	26+200.082	(477981.3540,3639490.6607)	72.491	50				
		Spiral-Curve-Spiral	26+200.082	(477981.3540,3639490.6607)	26+290.082	(478049.0974,3639549.7161)	90					
1	(478094.1176,3639577.6370)	Spiral-Curve-Spiral	26+290.082	(478049.0974,3639549.7161)	26+385.030	(478097.9354,3639630.4747)	94.947	80	250	90	LHS	4.44%
		Spiral-Curve-Spiral	26+385.030	(478097.9354,3639630.4747)	26+475.030	(478118.7726,3639717.8961)	90					
		Line	26+475.030	(478118.7726,3639717.8961)	26+533.637	(478128.9192,3639775.6185)	58.607					
		Spiral-Curve-Spiral	26+533.637	(478128.9192,3639775.6185)	26+600.468	(478136.7987,3639841.9000)	66.831					
2	(478144.8974,3639866.5166)	Spiral-Curve-Spiral	26+600.468	(478136.7987,3639841.9000)	26+647.710	(478131.5695,3639888.7411)	47.242	70	200	66.8	LHS	5.56%
		Spiral-Curve-Spiral	26+647.710	(478131.5695,3639888.7411)	26+714.541	(478109.2670,3639951.6531)	66.831					
		Line	26+714.541	(478109.2670,3639951.6531)	26+908.741	(478034.2935,3640130.7970)	194.2					
		Spiral-Curve-Spiral	26+908.741	(478034.2935,3640130.7970)	26+953.741	(478014.8875,3640171.3477)	45					
3	(478006.0915,3640198.1837)	Spiral-Curve-Spiral	26+953.741	(478014.8875,3640171.3477)	27+5.946	(477980.6227,3640210.3853)	52.205	50	150	45	LHS	7.00%
		Spiral-Curve-Spiral	27+5.946	(477980.6227,3640210.3853)	27+50.946	(477942.9308,3640234.8858)	45					
		Line	27+50.946	(477942.9308,3640234.8858)	27+64.071	(477931.5831,3640241.4798)	13.124					
		Spiral-Curve-Spiral	27+64.071	(477931.5831,3640241.4798)	27+109.071	(477893.8912,3640265.9803)	45					
4	(477876.4330,3640273.5270)	Spiral-Curve-Spiral	27+109.071	(477893.8912,3640265.9803)	27+144.391	(477869.1924,3640291.1143)	35.32	50	150	45	RHS	7.00%
		Spiral-Curve-Spiral	27+144.391	(477869.1924,3640291.1143)	27+189.391	(477845.3541,3640329.2285)	45					
		Line	27+189.391	(477845.3541,3640329.2285)	27+564.544	(477662.5629,3640656.8373)	375.154					
		Spiral-Curve-Spiral	27+564.544	(477662.5629,3640656.8373)	27+639.544	(477628.8026,3640723.7509)	75					
5	(477609.5364,3640751.8744)	Spiral-Curve-Spiral	27+639.544	(477628.8026,3640723.7509)	27+704.289	(477611.1919,3640785.9240)	64.745	80	300	75	RHS	3.70%
		Spiral-Curve-Spiral	27+704.289	(477611.1919,3640785.9240)	27+779.289	(477604.8457,3640860.6028)	75					
		Line	27+779.289	(477604.8457,3640860.6028)	27+822.314	(477602.9912,3640903.5881)	43.025					
		Spiral-Curve-Spiral	27+822.314	(477602.9912,3640903.5881)	27+897.314	(477596.6450,3640978.2669)	75					
6	(477598.5118,3641007.4185)	Spiral-Curve-Spiral	27+897.314	(477596.6450,3640978.2669)	27+952.767	(477582.3808,3641031.7720)	55.453	80	300	75	LHS	3.70%
		Spiral-Curve-Spiral	27+952.767	(477582.3808,3641031.7720)	28+27.767	(477550.7089,3641099.6990)	75					
		Line	28+27.767	(477550.7089,3641099.6990)	28+116.051	(477510.1010,3641178.0901)	88.285					
		Spiral-Curve-Spiral	28+116.051	(477510.1010,3641178.0901)	28+218.051	(477456.1594,3641264.3448)	102					
7	(477460.9387,3641272.9947)	Spiral-Curve-Spiral	28+218.051	(477456.1594,3641264.3448)	28+224.455	(477451.8601,3641269.0907)	6.404	80	210	102	LHS	5.29%
		Spiral-Curve-Spiral	28+224.455	(477451.8601,3641269.0907)	28+326.455	(477371.3388,3641331.2671)	102					
		Line	28+326.455	(477371.3388,3641331.2671)	28+688.113	(477068.1599,3641528.4432)	361.657					
		Spiral-Curve-Spiral	28+688.113	(477068.1599,3641528.4432)	28+755.113	(477010.1155,3641561.7397)	67					
8	(477008.8217,3641567.0346)	Spiral-Curve-Spiral	28+755.113	(477010.1155,3641561.7397)	28+761.559	(477004.1610,3641564.2084)	6.446	70	200	67	LHS	5.56%
		Spiral-Curve-Spiral	28+761.559	(477004.1610,3641564.2084)	28+828.559	(476939.5842,3641581.7485)	67					
		Line	28+828.559	(476939.5842,3641581.7485)	28+942.088	(476828.5350,3641605.3481)	113.529					
		Spiral-Curve-Spiral	28+942.088	(476828.5350,3641605.3481)	28+959.088	(476811.9190,3641608.9407)	17					
9	(476803.4170,3641610.6860)	Spiral-Curve-Spiral	28+959.088	(476811.9190,3641608.9407)	28+976.440	(476795.0277,3641612.9112)	17.352	70	800	17	RHS	3.56%
		Spiral-Curve-Spiral	28+976.440	(476795.0277,3641612.9112)	28+993.440	(476778.5513,3641617.0972)	17					
		Line	28+993.440	(476778.5513,3641617.0972)	29+195.949	(476582.4552,3641667.6576)	202.509					
		Spiral-Curve-Spiral	29+195.949	(476582.4552,3641667.6576)	29+234.949	(476544.5212,3641676.6905)	39					
10	(476541.0476,3641678.3339)	Spiral-Curve-Spiral	29+234.949	(476544.5212,3641676.6905)	29+242.385	(476537.2143,3641678.0655)	7.435	70	350	39	LHS	3.18%
		Spiral-Curve-Spiral	29+242.385	(476537.2143,3641678.0655)	29+281.385	(476498.5917,3641683.4388)	39					
		Line	29+281.385	(476498.5917,3641683.4388)	29+296.615	(476483.4701,3641685.2571)	15.231					
		Spiral-Curve-Spiral	29+296.615	(476483.4701,3641685.2571)	29+330.615	(476449.7768,3641689.7935)	34					
11	(476446.4460,3641689.7089)	Spiral-Curve-Spiral	29+330.615	(476449.7768,3641689.7935)	29+337.152	(476443.3350,3641690.9015)	6.537	70	400	34	RHS	2.78%
		Spiral-Curve-Spiral	29+337.152	(476443.3350,3641690.9015)	29+371.152	(476410.0624,3641697.8835)	34					
		Line	29+371.152	(476410.0624,3641697.8835)	29+425.898	(476356.6473,3641709.8847)	54.747					
		Spiral-Curve-Spiral	29+425.898	(476356.6473,3641709.8847)	29+468.898	(476314.5658,3641718.7078)	43					

REV.	DATE	REVISIONS

CLIENT:

NATIONAL HIGHWAYS & INFRASTRUCTURE DEVELOPMENT CORPORATION LTD.
PTI BUILDING, 4 PARLIAMENT STREET
SANSAD MARG AREA, NEW DELHI - 110001

DESIGN CONSULTANT:

ANANDJIWALA INFRA ADVISORY
9, Shivranjani Shopping Center, On 132 Feet Ring Road,
Nr. Shivranjani Cross Road, Satellite, Ahmedabad - 380 015
Email: anandjiwalainfra@gmail.com

PROJECT: **CONSULTANCY SERVICES FOR FEASIBILITY STUDY, PREPARATION OF DETAILED PROJECT REPORT AND PROVIDING PRE-CONSTRUCTION SERVICES FOR UPGRADATION OF EXISTING 2 LANE HIGHWAY TO 4 LANE WITH PAVED SHOULDER CONFIGURATION (NH-144A) FROM KM 26.350 (KHATI CHOWK) TO KM 30.097 (HANUMAN CHOWK) OF JAMMU - AKHNOOR SECTION IN THE UNION TERRITORY OF JAMMU & KASHMIR ON EPC BASIS**

SCALE: Not to scale
Dimensions as mentioned

TITLE: HORIZONTAL AL DETAILS

CLIENT APPROVAL: | SIGNATURE:

DWG NO:– ICS/JA/NHIDCL/FS/TCS/

DRAWN:	CHECKED:	DESIGNED:	APPROVED:
LK	SJ	SC	LA

HIP No	HIP Point	Type	Start Station	Start Point	End Station	End Point	Length	Design Speed	Radius	Trans Length	Hand of Arc	Super Elevation
12	(476289.1090,3641725.0590)	Spiral-Curve-Spiral	29+468.898	(476314.5658,3641718.7078)	29+521.027	(476262.8726,3641725.2495)	52.129	80	500	43	LHS	5.00%
		Spiral-Curve-Spiral	29+521.027	(476262.8726,3641725.2495)	29+564.027	(476219.9198,3641727.1872)	43					
		Line	29+564.027	(476219.9198,3641727.1872)	29+711.647	(476072.3703,3641731.7257)	147.619					
		Spiral-Curve-Spiral	29+711.647	(476072.3703,3641731.7257)	29+722.647	(476061.3758,3641732.0740)	11					
13	(475980.3666,3641734.5556)	Spiral-Curve-Spiral	29+722.647	(476061.3758,3641732.0740)	29+884.633	(475899.8770,3641744.0461)	161.986	80	2000	11	RHS	2.50%
		Spiral-Curve-Spiral	29+884.633	(475899.8770,3641744.0461)	29+895.633	(475888.9513,3641745.3228)	11					
		Line	29+895.633	(475888.9513,3641745.3228)	30+28.581	(475756.9155,3641760.8743)	132.948					
		Spiral-Curve-Spiral	30+28.581	(475756.9155,3641760.8743)	30+43.581	(475742.0171,3641762.6165)	15					
14	(475724.0124,3641764.7497)	Spiral-Curve-Spiral	30+43.581	(475742.0171,3641762.6165)	30+79.841	(475705.9715,3641766.5501)	36.26	80	3000	15	LHS	2.50%
		Spiral-Curve-Spiral	30+79.841	(475705.9715,3641766.5501)	30+94.841	(475691.0479,3641768.0624)	15					
		Line	30+94.841	(475691.0479,3641768.0624)	30+288.038	(475498.8192,3641787.3798)	193.197					
		Spiral-Curve-Spiral	30+288.038	(475498.8192,3641787.3798)	30+310.538	(475476.4070,3641789.3495)	22.5					
15	(475461.1171,3641791.1686)	Spiral-Curve-Spiral	30+310.538	(475476.4070,3641789.3495)	30+341.171	(475445.7892,3641789.7047)	30.633	50	300	22.5	LHS	3.70%
		Spiral-Curve-Spiral	30+341.171	(475445.7892,3641789.7047)	30+363.671	(475423.3373,3641788.2555)	22.5					
		Line	30+363.671	(475423.3373,3641788.2555)	30+369.114	(475417.9103,3641787.8371)	5.443					
2-LANE IMPROVEMENT												
		Line	26+500.00	(478089.9855,3639995.7612)	26+773.53	(477986.1825,3640248.8245)	273.525					
		Spiral-Curve-Spiral	26+773.53	(477986.1825,3640248.8245)	26+803.53	(477974.6244,3640276.5081)	30					
1	(477961.9476,3640305.8346)	Spiral-Curve-Spiral	26+803.53	(477974.6244,3640276.5081)	26+867.39	(477946.9725,3640334.0568)	63.864	100	800	30	LHS	-3.56%
		Spiral-Curve-Spiral	26+867.39	(477946.9725,3640334.0568)	26+897.39	(477932.5811,3640360.3790)	30					
		Line	26+897.39	(477932.5811,3640360.3790)	27+221.82	(477775.1688,3640644.0630)	324.431					
		Spiral-Curve-Spiral	27+221.82	(477775.1688,3640644.0630)	27+251.82	(477760.4495,3640670.2033)	30					
2	(477754.2461,3640680.9049)	Spiral-Curve-Spiral	27+251.82	(477760.4495,3640670.2033)	27+276.56	(477747.7149,3640691.4096)	24.737	100	800	30	LHS	-3.56%
		Spiral-Curve-Spiral	27+276.56	(477747.7149,3640691.4096)	27+306.56	(477731.5575,3640716.6863)	30					
		Line	27+306.56	(477731.5575,3640716.6863)	27+315.48	(477726.7049,3640724.1742)	8.923					
		Spiral-Curve-Spiral	27+315.48	(477726.7049,3640724.1742)	27+370.48	(477697.8652,3640770.9929)	55					
3	(477688.7517,3640787.4296)	Spiral-Curve-Spiral	27+370.48	(477697.8652,3640770.9929)	27+408.04	(477681.2196,3640804.6484)	37.561	80	400	55	RHS	-5%
		Spiral-Curve-Spiral	27+408.04	(477681.2196,3640804.6484)	27+463.04	(477661.5133,3640855.9845)	55					
		Line	27+463.04	(477661.5133,3640855.9845)	27+515.83	(477643.7304,3640905.6852)	52.786					
		Spiral-Curve-Spiral	27+515.83	(477643.7304,3640905.6852)	27+570.83	(477624.0242,3640957.0212)	55					
4	(477623.8051,3640957.5220)	Spiral-Curve-Spiral	27+570.83	(477624.0242,3640957.0212)	27+571.92	(477623.5847,3640958.0222)	1.093	80	400	55	LHS	-5%
		Spiral-Curve-Spiral	27+571.92	(477623.5847,3640958.0222)	27+626.92	(477599.1272,3641007.2721)	55					
		Line	27+626.92	(477599.1272,3641007.2721)	27+696.89	(477566.5781,3641069.2114)	69.971					

REV.	DATE	REVISIONS

CLIENT:

NATIONAL HIGHWAYS & INFRASTRUCTURE DEVELOPMENT CORPORATION LTD.
PTI BUILDING, 4 PARLIAMENT STREET
SANSAD MARG AREA, NEW DELHI - 110001

DESIGN CONSULTANT:

ANANDJIWALA INFRA ADVISORY
9, Shivranjani Shopping Center, On 132 Feet Ring Road,
Nr. Shivranjani Cross Road, Satellite, Ahmedabad - 380 015
Email: anandjiwalainfra@gmail.com

PROJECT: CONSULTANCY SERVICES FOR FEASIBILITY STUDY, PREPARATION OF DETAILED PROJECT REPORT AND PROVIDING PRE-CONSTRUCTION SERVICES FOR UPGRADATION OF EXISTING 2 LANE HIGHWAY TO 4 LANE WITH PAVED SHOULDER CONFIGURATION (NH-144A) FROM KM 26.350 (KHATI CHOWK) TO KM 30.097 (HANUMAN CHOWK) OF JAMMU - AKHNOOR SECTION IN THE UNION TERRITORY OF JAMMU & KASHMIR ON EPC BASIS

SCALE: Not to scale
Dimensions as mentioned

TITLE: HORIZONTAL AL DETAILS

CLIENT APPROVAL: | SIGNATURE:

DWG NO:– ICS/JA/NHIDCL/FS/TCS/

DRAWN:	CHECKED:	DESIGNED:	APPROVED:
LK	SJ	SC	LA

TYPICAL CROSS SECTIONS

TYPE - 01A

TYPICAL CROSS SECTION FOR 4 - LANE DIVIDED HIGHWAY WITHOUT SERVICE ROAD AND WITH RAISED MEDIAN (OPEN COUNTRY PLAIN & ROLLING)

BANKING SECTION

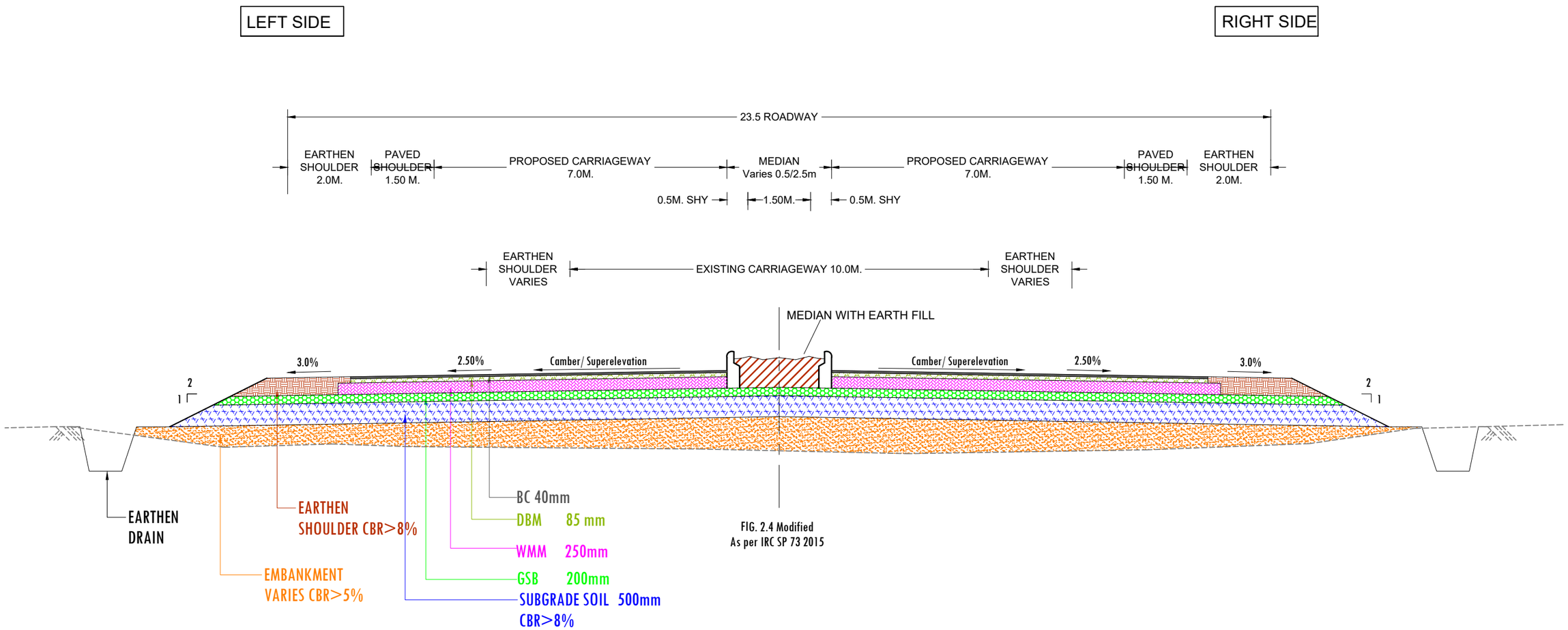

FIG. 2.4 Modified
As per IRC SP 73 2015

NOTES:

1. ALL DIMENSIONS ARE IN METERS, UNLESS NOTED OTHERWISE.
2. DIMENSIONS SHALL NOT BE SCALED OFF FROM THE DRAWING. ONLY WRITTEN DIMENSION SHALL BE FOLLOWED

REV.	DATE	REVISIONS

CLIENT:

NATIONAL HIGHWAYS & INFRASTRUCTURE DEVELOPMENT CORPORATION LTD.
PTI BUILDING, 4 PARLIAMENT STREET
SANSAD MARG AREA, NEW DELHI - 110001

DESIGN CONSULTANT:

ANANDJIWALA INFRA ADVISORY
9, Shivranjani Shopping Center, On 132 Feet Ring Road,
Nr. Shivranjani Cross Road, Satellite, Ahmedabad - 380 015
Email: anandjiwalainfra@gmail.com

PROJECT: CONSULTANCY SERVICES FOR FEASIBILITY STUDY, PREPARATION OF DETAILED PROJECT REPORT AND PROVIDING PRE-CONSTRUCTION SERVICES FOR UPGRADATION OF EXISTING 2 LANE HIGHWAY TO 4 LANE WITH PAVED SHOULDER CONFIGURATION (NH-144A) FROM KM 26.350 (KHATI CHOWK) TO KM 30.097 (HANUMAN CHOWK) OF JAMMU - AKHNOOR SECTION IN THE UNION TERRITORY OF JAMMU & KASHMIR ON EPC BASIS

SCALE: Not to scale
Dimensions as mentioned

TITLE: TYPICAL CROSS SECTION

CLIENT APPROVAL: | SIGNATURE:

DWG NO:– ICS/JA/NHIDCL/FS/TCS/

DRAWN:	CHECKED:	DESIGNED:	APPROVED:
LK	SJ	SC	LA

TYPE - 01B

TYPICAL CROSS SECTION FOR 4 - LANE DIVIDED HIGHWAY WITHOUT SERVICE ROAD AND WITH RAISED MEDIAN (OPEN COUNTRY PLAIN & ROLLING)

CUTTING SECTION (HEIGHT OF CUTTING <0.5m)

CBR>5%

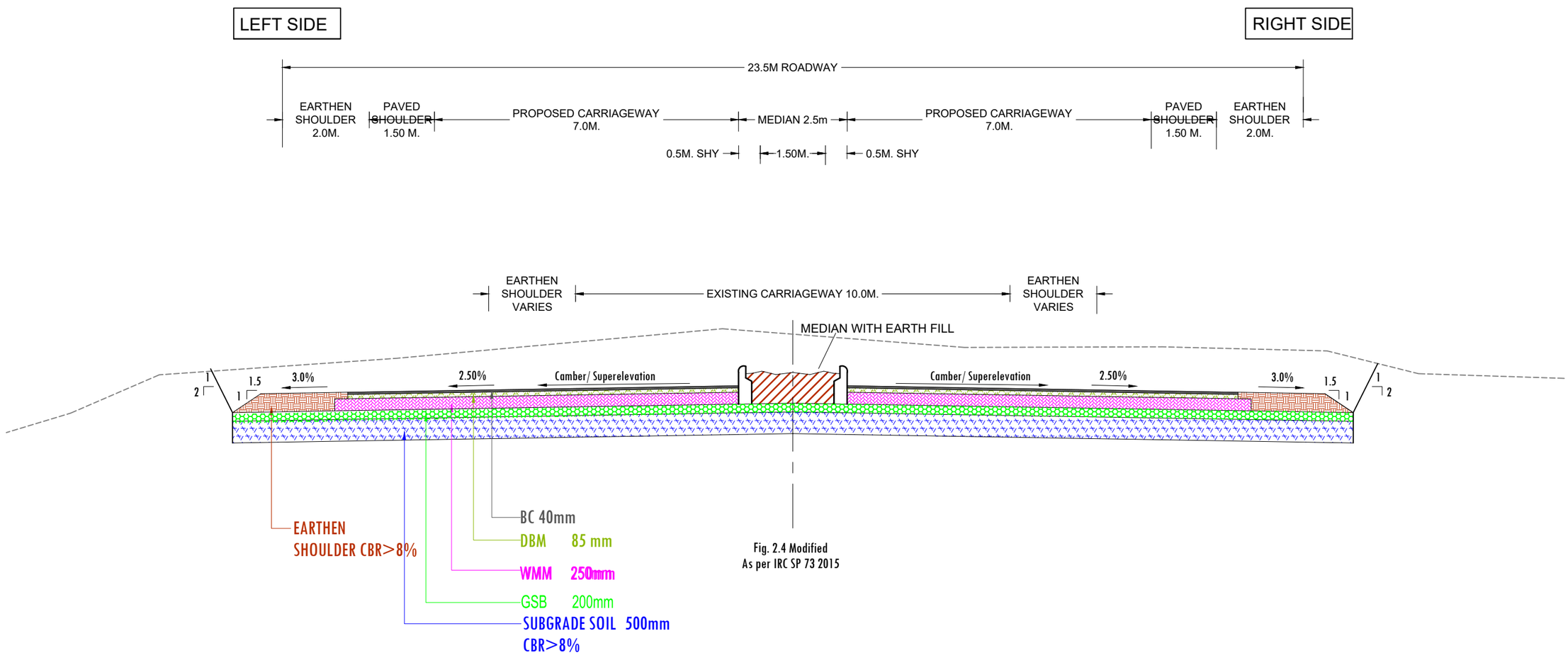

Fig. 2.4 Modified
As per IRC SP 73 2015

NOTES:

1. ALL DIMENSIONS ARE IN METERS, UNLESS NOTED OTHERWISE.
2. DIMENSIONS SHALL NOT BE SCALED OFF FROM THE DRAWING. ONLY WRITTEN DIMENSION SHALL BE FOLLOWED

REV.	DATE	REVISIONS

CLIENT:

NATIONAL HIGHWAYS & INFRASTRUCTURE DEVELOPMENT CORPORATION LTD.
PTI BUILDING, 4 PARLIAMENT STREET
SANSAD MARG AREA, NEW DELHI - 110001

DESIGN CONSULTANT:

ANANDJIWALA INFRA ADVISORY
9, Shivranjani Shopping Center, On 132 Feet Ring Road, Nr. Shivranjani Cross Road, Satellite, Ahmedabad - 380 015
Email: anandjiwalainfra@gmail.com

PROJECT: CONSULTANCY SERVICES FOR FEASIBILITY STUDY, PREPARATION OF DETAILED PROJECT REPORT AND PROVIDING PRE-CONSTRUCTION SERVICES FOR UPGRADATION OF EXISTING 2 LANE HIGHWAY TO 4 LANE WITH PAVED SHOULDER CONFIGURATION (NH-144A) FROM KM 26.350 (KHATI CHOWK) TO KM 30.097 (HANUMAN CHOWK) OF JAMMU - AKHNOOR SECTION IN THE UNION TERRITORY OF JAMMU & KASHMIR ON EPC BASIS

SCALE: Not to scale
Dimensions as mentioned

TITLE: TYPICAL CROSS SECTION

CLIENT APPROVAL: | SIGNATURE:

DWG NO:– ICS/JA/NHIDCL/FS/TCS/

DRAWN:	CHECKED:	DESIGNED:	APPROVED:
LK	SJ	SC	LA

TYPE - 02

4 - LANE FLEXIBLE PAVEMENT (OPEN COUNTRY PLAIN & ROLLING) FOR BANKING SECTION MORE THAN 3.0M

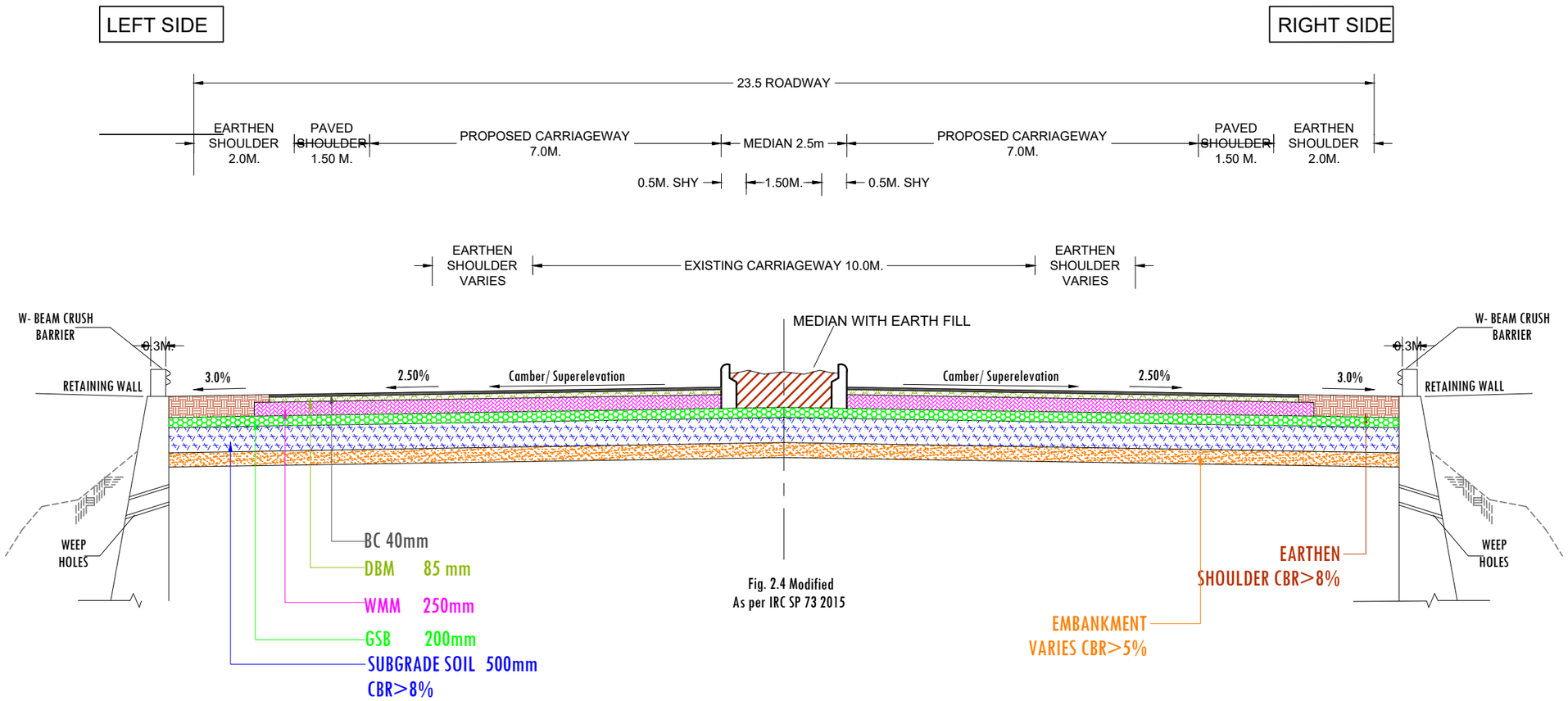

NOTES:

1. ALL DIMENSIONS ARE IN METERS, UNLESS NOTED OTHERWISE.
2. DIMENSIONS SHALL NOT BE SCALED OFF FROM THE DRAWING. ONLY WRITTEN DIMENSION SHALL BE FOLLOWED

REV.	DATE	REVISIONS

CLIENT:

NATIONAL HIGHWAYS & INFRASTRUCTURE DEVELOPMENT CORPORATION LTD.
PTI BUILDING, 4 PARLIAMENT STREET
SANSAD MARG AREA, NEW DELHI - 110001

DESIGN CONSULTANT:

ANANDJIWALA INFRA ADVISORY
9, Shivranjani Shopping Center, On 132 Feet Ring Road, Nr. Shivranjani Cross Road, Satellite, Ahmedabad - 380 015
Email: anandjiwalainfra@gmail.com

PROJECT: CONSULTANCY SERVICES FOR FEASIBILITY STUDY, PREPARATION OF DETAILED PROJECT REPORT AND PROVIDING PRE-CONSTRUCTION SERVICES FOR UPGRADATION OF EXISTING 2 LANE HIGHWAY TO 4 LANE WITH PAVED SHOULDER CONFIGURATION (NH-144A) FROM KM 26.350 (KHATI CHOWK) TO KM 30.097 (HANUMAN CHOWK) OF JAMMU - AKHNOOR SECTION IN THE UNION TERRITORY OF JAMMU & KASHMIR ON EPC BASIS

SCALE: Not to scale
Dimensions as mentioned

TITLE: TYPICAL CROSS SECTION

CLIENT APPROVAL: | SIGNATURE:

DWG NO:– ICS/JA/NHIDCL/FS/TCS/

DRAWN:	CHECKED:	DESIGNED:	APPROVED:
LK	SJ	SC	LA

TYPE - 03

TYPICAL CROSS SECTION FOR 4 - LANE DIVIDED HIGHWAY WITHOUT SERVICE ROAD AND WITH RAISED MEDIAN (OPEN COUNTRY PLAIN & ROLLING) ISOLATED BUILTUP/CUT SECTIONS WITH BOTH SIDE DRAIN

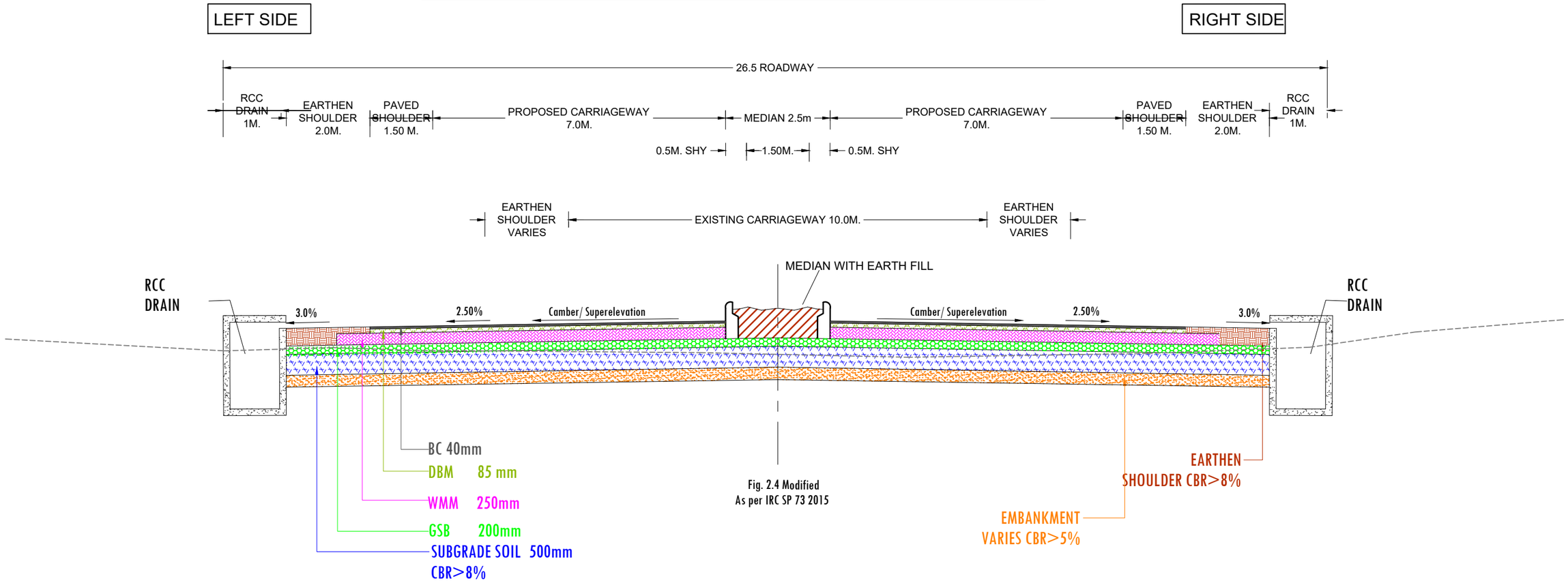

NOTES:

1. ALL DIMENSIONS ARE IN METERS, UNLESS NOTED OTHERWISE.
2. DIMENSIONS SHALL NOT BE SCALED OFF FROM THE DRAWING. ONLY WRITTEN DIMENSION SHALL BE FOLLOWED

REV.	DATE	REVISIONS

CLIENT:

NATIONAL HIGHWAYS & INFRASTRUCTURE DEVELOPMENT CORPORATION LTD.
PTI BUILDING, 4 PARLIAMENT STREET
SANSAD MARG AREA, NEW DELHI - 110001

DESIGN CONSULTANT:

ANANDJIWALA INFRA ADVISORY
9, Shivranjani Shopping Center, On 132 Feet Ring Road, Nr. Shivranjani Cross Road, Satellite, Ahmedabad - 380 015
Email: anandjiwalainfra@gmail.com

PROJECT: CONSULTANCY SERVICES FOR FEASIBILITY STUDY, PREPARATION OF DETAILED PROJECT REPORT AND PROVIDING PRE-CONSTRUCTION SERVICES FOR UPGRADATION OF EXISTING 2 LANE HIGHWAY TO 4 LANE WITH PAVED SHOULDER CONFIGURATION (NH-144A) FROM KM 26.350 (KHATI CHOWK) TO KM 30.097 (HANUMAN CHOWK) OF JAMMU - AKHNOOR SECTION IN THE UNION TERRITORY OF JAMMU & KASHMIR ON EPC BASIS

SCALE: Not to scale
Dimensions as mentioned

TITLE: TYPICAL CROSS SECTION

CLIENT APPROVAL: | SIGNATURE:

DWG NO:– ICS/JA/NHIDCL/FS/TCS/

DRAWN:	CHECKED:	DESIGNED:	APPROVED:
LK	SJ	SC	LA

TYPE - 04A

TYPICAL CROSS SECTION FOR 2 - LANE UNDIVIDED HIGHWAY OPEN COUNTRY PLAIN & ROLLING)

BANKING SECTION

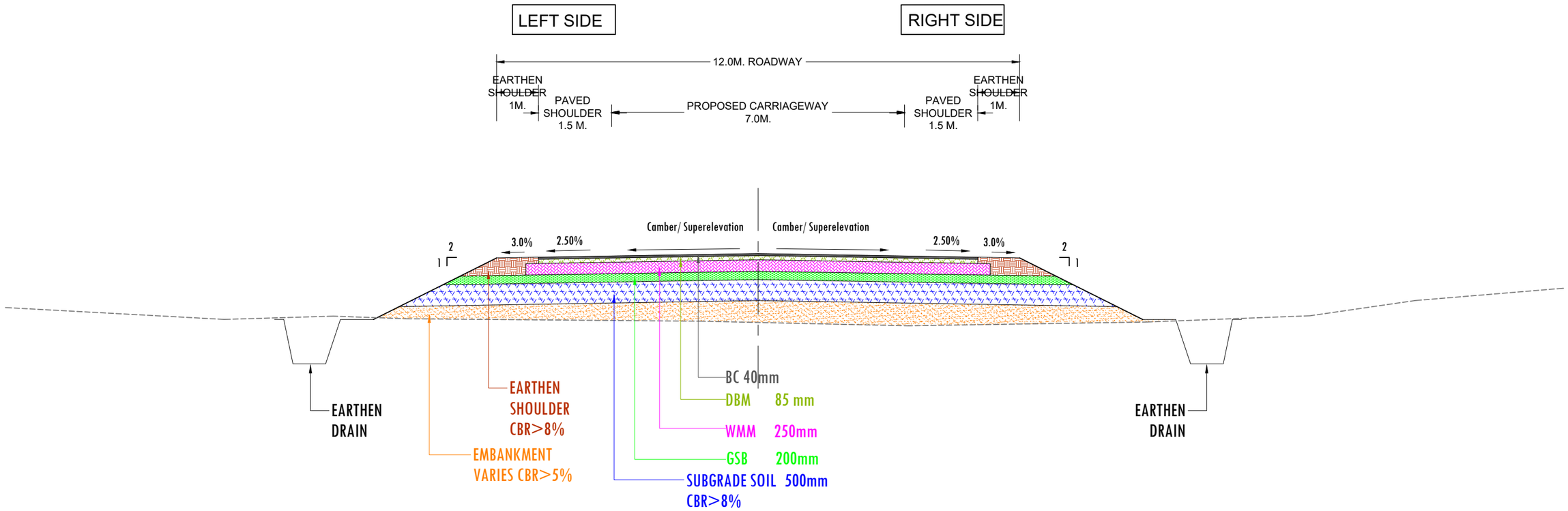

FIG. 2.1
As per IRC SP 73: 2018 Table 2.2

NOTES:

1. ALL DIMENSIONS ARE IN METERS, UNLESS NOTED OTHERWISE.
2. DIMENSIONS SHALL NOT BE SCALED OFF FROM THE DRAWING. ONLY WRITTEN DIMENSION SHALL BE FOLLOWED

REV.	DATE	REVISIONS

CLIENT:
NATIONAL HIGHWAYS & INFRASTRUCTURE DEVELOPMENT CORPORATION LTD.
PTI BUILDING, 4 PARLIAMENT STREET
SANSAD MARG AREA, NEW DELHI - 110001

DESIGN CONSULTANT:
ANANDJIWALA INFRA ADVISORY
9, Shivranjani Shopping Center, On 132 Feet Ring Road, Nr. Shivranjani Cross Road, Satellite, Ahmedabad - 380 015
Email: anandjiwalainfra@gmail.com

PROJECT: CONSULTANCY SERVICES FOR FEASIBILITY STUDY, PREPARATION OF DETAILED PROJECT REPORT AND PROVIDING PRE-CONSTRUCTION SERVICES FOR UPGRADATION OF EXISTING 2 LANE HIGHWAY TO 4 LANE WITH PAVED SHOULDER CONFIGURATION (NH-144A) FROM KM 26.350 (KHATI CHOWK) TO KM 30.097 (HANUMAN CHOWK) OF JAMMU - AKHNOOR SECTION IN THE UNION TERRITORY OF JAMMU & KASHMIR ON EPC BASIS

SCALE: Not to scale
Dimensions as mentioned

TITLE: TYPICAL CROSS SECTION

CLIENT APPROVAL: | SIGNATURE:

DWG NO:– ICS/JA/NHIDCL/FS/TCS/

DRAWN:	CHECKED:	DESIGNED:	APPROVED:
LK	SJ	SC	LA

TYPE - 04B

TYPICAL CROSS SECTION FOR 2 - LANE UNDIVIDED HIGHWAY OPEN COUNTRY PLAIN & ROLLING)

CUTTING SECTION (HEIGHT OF CUTTING <0.5m) CBR >5%

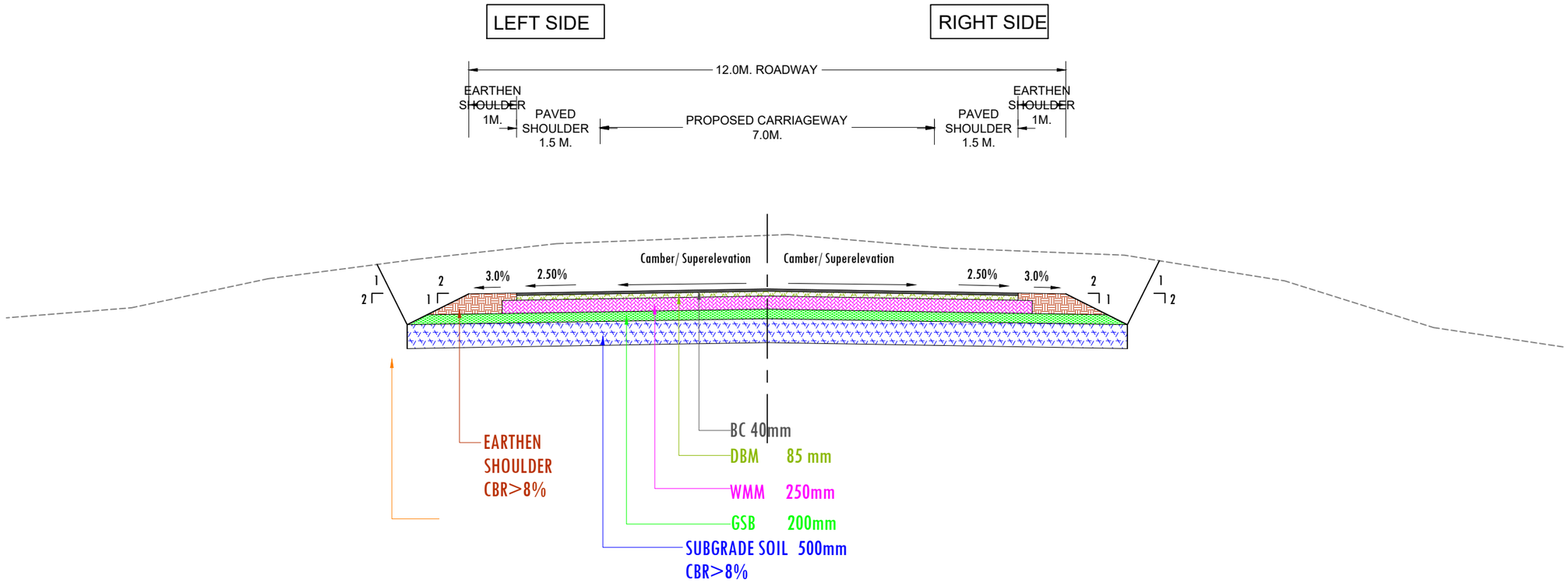

Fig, 2.1
As per IRC SP 73: 2018 Table 2.2

NOTES:

1. ALL DIMENSIONS ARE IN METERS, UNLESS NOTED OTHERWISE.
2. DIMENSIONS SHALL NOT BE SCALED OFF FROM THE DRAWING. ONLY WRITTEN DIMENSION SHALL BE FOLLOWED

REV.	DATE	REVISIONS

CLIENT:

NATIONAL HIGHWAYS & INFRASTRUCTURE DEVELOPMENT CORPORATION LTD.
PTI BUILDING, 4 PARLIAMENT STREET
SANSAD MARG AREA, NEW DELHI - 110001

DESIGN CONSULTANT:

ANANDJIWALA INFRA ADVISORY
9, Shivranjani Shopping Center, On 132 Feet Ring Road,
Nr. Shivranjani Cross Road, Satellite, Ahmedabad - 380 015
Email: anandjiwalainfra@gmail.com

PROJECT: CONSULTANCY SERVICES FOR FEASIBILITY STUDY, PREPARATION OF DETAILED PROJECT REPORT AND PROVIDING PRE-CONSTRUCTION SERVICES FOR UPGRADATION OF EXISTING 2 LANE HIGHWAY TO 4 LANE WITH PAVED SHOULDER CONFIGURATION (NH-144A) FROM KM 26.350 (KHATI CHOWK) TO KM 30.097 (HANUMAN CHOWK) OF JAMMU - AKHNOOR SECTION IN THE UNION TERRITORY OF JAMMU & KASHMIR ON EPC BASIS

SCALE: Not to scale
Dimensions as mentioned

TITLE: TYPICAL CROSS SECTION

CLIENT APPROVAL: | SIGNATURE:

DWG NO:– ICS/JA/NHIDCL/FS/TCS/

DRAWN:	CHECKED:	DESIGNED:	APPROVED:
LK	SJ	SC	LA

TYPE - 05A

TYPICAL CROSS SECTION FOR 2 - LANE UNDIVIDED HIGHWAY
OPEN COUNTRY PLAIN & ROLLING)

BANKING SECTION
MORE THAN 3m

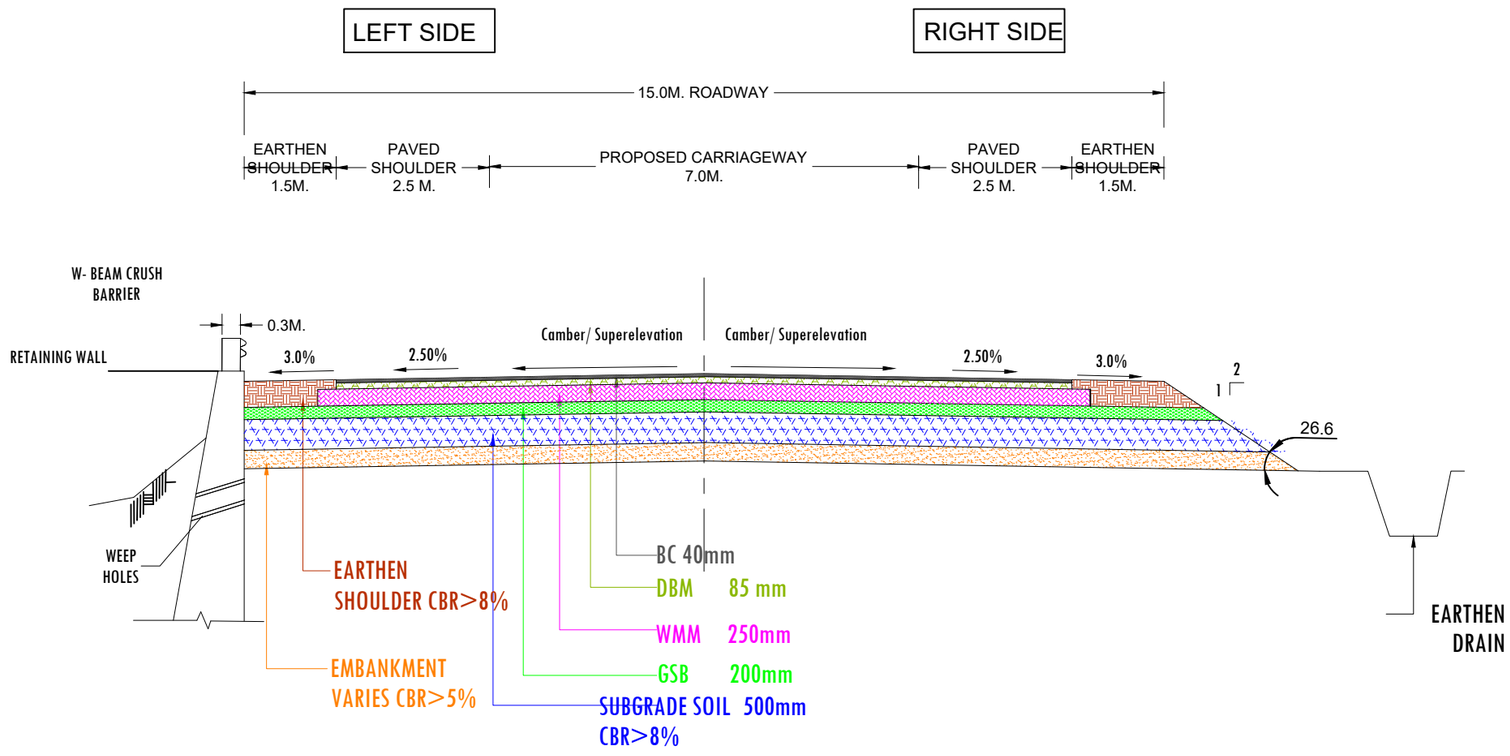

Fig. 2.1
As per IRC SP 73: 2018 Table 2.2

NOTES:

1. ALL DIMENSIONS ARE IN METERS, UNLESS NOTED OTHERWISE.
2. DIMENSIONS SHALL NOT BE SCALED OFF FROM THE DRAWING. ONLY WRITTEN DIMENSION SHALL BE FOLLOWED

REV.	DATE	REVISIONS

CLIENT:
NATIONAL HIGHWAYS & INFRASTRUCTURE DEVELOPMENT CORPORATION LTD.
PTI BUILDING, 4 PARLIAMENT STREET
SANSAD MARG AREA, NEW DELHI - 110001

DESIGN CONSULTANT:
ANANDJIWALA INFRA ADVISORY
9, Shivranjani Shopping Center, On 132 Feet Ring Road, Nr. Shivranjani Cross Road, Satellite, Ahmedabad - 380 015
Email: anandjiwalainfra@gmail.com

PROJECT: CONSULTANCY SERVICES FOR FEASIBILITY STUDY, PREPARATION OF DETAILED PROJECT REPORT AND PROVIDING PRE-CONSTRUCTION SERVICES FOR UPGRADATION OF EXISTING 2 LANE HIGHWAY TO 4 LANE WITH PAVED SHOULDER CONFIGURATION (NH-144A) FROM KM 26.350 (KHATI CHOWK) TO KM 30.097 (HANUMAN CHOWK) OF JAMMU - AKHNOOR SECTION IN THE UNION TERRITORY OF JAMMU & KASHMIR ON EPC BASIS

SCALE: Not to scale
Dimensions as mentioned

TITLE: TYPICAL CROSS SECTION

CLIENT APPROVAL: | SIGNATURE:

DWG NO:– ICS/JA/NHIDCL/FS/TCS/

DRAWN:	CHECKED:	DESIGNED:	APPROVED:
LK	SJ	SC	LA

TYPE - 05B

TYPICAL CROSS SECTION FOR 2 - LANE UNDIVIDED HIGHWAY
OPEN COUNTRY PLAIN & ROLLING)

BANKING SECTION
MORE THAN 3m

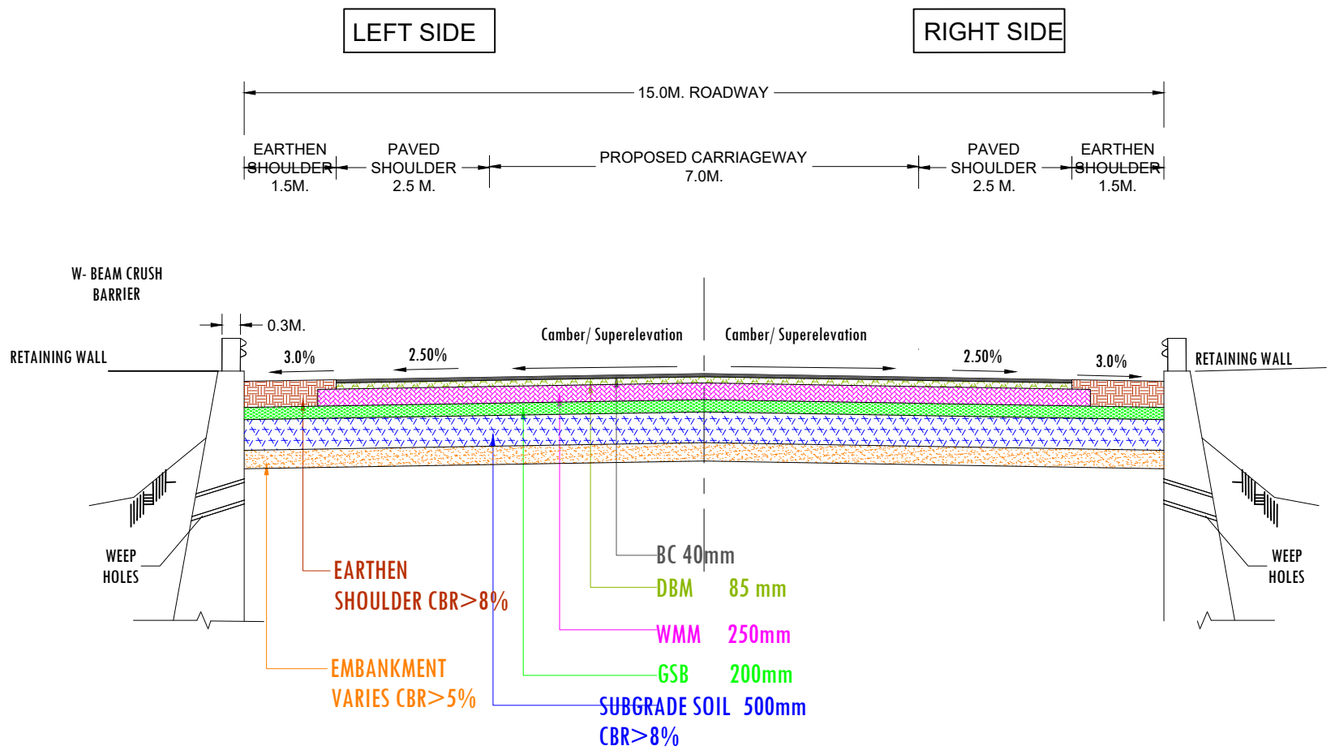

Fig. 2.1
As per IRC SP 73: 2018 Table 2.2

NOTES:

1. ALL DIMENSIONS ARE IN METERS, UNLESS NOTED OTHERWISE.
2. DIMENSIONS SHALL NOT BE SCALED OFF FROM THE DRAWING. ONLY WRITTEN DIMENSION SHALL BE FOLLOWED

REV.	DATE	REVISIONS

CLIENT:
NATIONAL HIGHWAYS & INFRASTRUCTURE DEVELOPMENT CORPORATION LTD.
PTI BUILDING, 4 PARLIAMENT STREET
SANSAD MARG AREA, NEW DELHI - 110001

DESIGN CONSULTANT:
ANANDJIWALA INFRA ADVISORY
9, Shivranjani Shopping Center, On 132 Feet Ring Road, Nr. Shivranjani Cross Road, Satellite, Ahmedabad - 380 015
Email: anandjiwalainfra@gmail.com

PROJECT: CONSULTANCY SERVICES FOR FEASIBILITY STUDY, PREPARATION OF DETAILED PROJECT REPORT AND PROVIDING PRE-CONSTRUCTION SERVICES FOR UPGRADATION OF EXISTING 2 LANE HIGHWAY TO 4 LANE WITH PAVED SHOULDER CONFIGURATION (NH-144A) FROM KM 26.350 (KHATI CHOWK) TO KM 30.097 (HANUMAN CHOWK) OF JAMMU - AKHNOOR SECTION IN THE UNION TERRITORY OF JAMMU & KASHMIR ON EPC BASIS

SCALE: Not to scale
Dimensions as mentioned

TITLE: TYPICAL CROSS SECTION

CLIENT APPROVAL: | SIGNATURE:

DWG NO:– ICS/JA/NHIDCL/FS/TCS/

DRAWN:	CHECKED:	DESIGNED:	APPROVED:
LK	SJ	SC	LA

TYPE - 06A

4 - LANE FLEXIBLE PAVEMENT (OPEN COUNTRY PLAIN & ROLLING) FOR BANKING SECTION MORE THAN 3.0M LEFT SIDE RETAINING

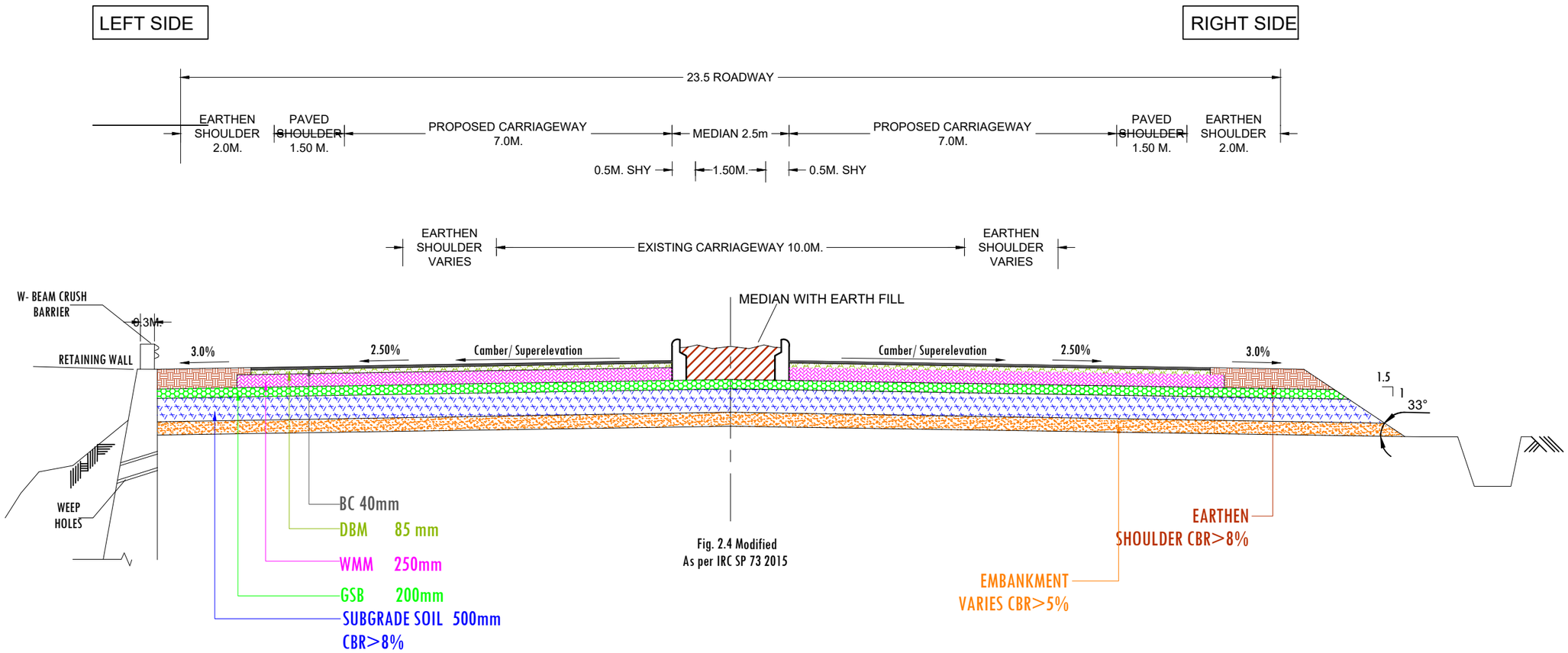

NOTES:

1. ALL DIMENSIONS ARE IN METERS, UNLESS NOTED OTHERWISE.
2. DIMENSIONS SHALL NOT BE SCALED OFF FROM THE DRAWING. ONLY WRITTEN DIMENSION SHALL BE FOLLOWED

REV.	DATE	REVISIONS

CLIENT:

NATIONAL HIGHWAYS & INFRASTRUCTURE DEVELOPMENT CORPORATION LTD.
PTI BUILDING, 4 PARLIAMENT STREET
SANSAD MARG AREA, NEW DELHI - 110001

DESIGN CONSULTANT:

ANANDJIWALA INFRA ADVISORY
9, Shivranjani Shopping Center, On 132 Feet Ring Road,
Nr. Shivranjani Cross Road, Satellite, Ahmedabad - 380 015
Email: anandjiwalainfra@gmail.com

PROJECT: CONSULTANCY SERVICES FOR FEASIBILITY STUDY, PREPARATION OF DETAILED PROJECT REPORT AND PROVIDING PRE-CONSTRUCTION SERVICES FOR UPGRADATION OF EXISTING 2 LANE HIGHWAY TO 4 LANE WITH PAVED SHOULDER CONFIGURATION (NH-144A) FROM KM 26.350 (KHATI CHOWK) TO KM 30.097 (HANUMAN CHOWK) OF JAMMU - AKHNOOR SECTION IN THE UNION TERRITORY OF JAMMU & KASHMIR ON EPC BASIS

SCALE: Not to scale
Dimensions as mentioned

TITLE: TYPICAL CROSS SECTION

CLIENT APPROVAL: | SIGNATURE:

DWG NO:– ICS/JA/NHIDCL/FS/TCS/

DRAWN:	CHECKED:	DESIGNED:	APPROVED:
LK	SJ	SC	LA

TYPE - 06B

4 - LANE FLEXIBLE PAVEMENT (OPEN COUNTRY PLAIN & ROLLING) FOR BANKING SECTION MORE THAN 3.0M RIGHT SIDE RETAINING

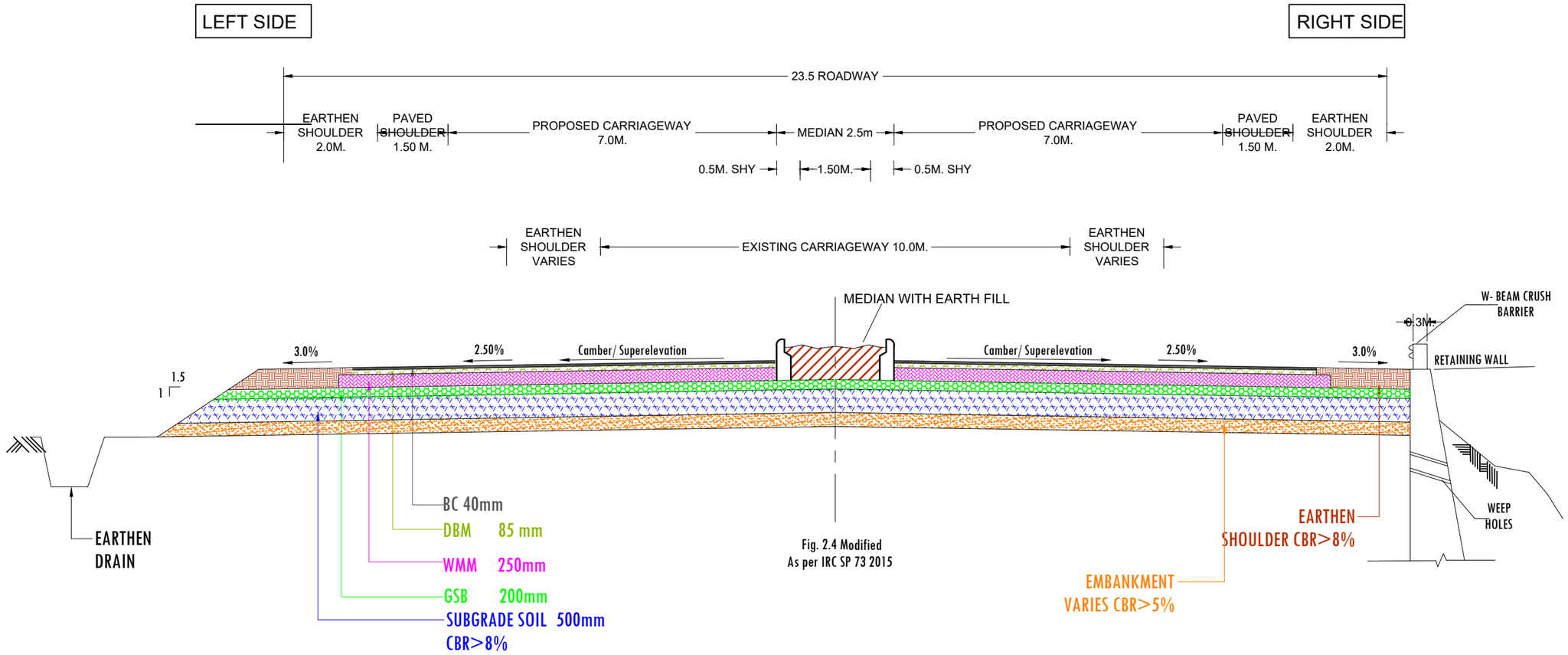

NOTES:

1. ALL DIMENSIONS ARE IN METERS, UNLESS NOTED OTHERWISE.
2. DIMENSIONS SHALL NOT BE SCALED OFF FROM THE DRAWING. ONLY WRITTEN DIMENSION SHALL BE FOLLOWED

REV.	DATE	REVISIONS

CLIENT:

NATIONAL HIGHWAYS & INFRASTRUCTURE DEVELOPMENT CORPORATION LTD.
PTI BUILDING, 4 PARLIAMENT STREET
SANSAD MARG AREA, NEW DELHI - 110001

DESIGN CONSULTANT:

ANANDJIWALA INFRA ADVISORY
9, Shivranjani Shopping Center, On 132 Feet Ring Road,
Nr. Shivranjani Cross Road, Satellite, Ahmedabad - 380 015
Email: anandjiwalainfra@gmail.com

PROJECT: CONSULTANCY SERVICES FOR FEASIBILITY STUDY, PREPARATION OF DETAILED PROJECT REPORT AND PROVIDING PRE-CONSTRUCTION SERVICES FOR UPGRADATION OF EXISTING 2 LANE HIGHWAY TO 4 LANE WITH PAVED SHOULDER CONFIGURATION (NH-144A) FROM KM 26.350 (KHATI CHOWK) TO KM 30.097 (HANUMAN CHOWK) OF JAMMU - AKHNOOR SECTION IN THE UNION TERRITORY OF JAMMU & KASHMIR ON EPC BASIS

SCALE: Not to scale
Dimensions as mentioned

TITLE: TYPICAL CROSS SECTION

CLIENT APPROVAL: | SIGNATURE:

DWG NO:– ICS/JA/NHIDCL/FS/TCS/

DRAWN:	CHECKED:	DESIGNED:	APPROVED:
LK	SJ	SC	LA

TYPE - 07

TYPICAL CROSS SECTION FOR 2 - LANE UNDIVIDED HIGHWAY WITH DRAIN DUCT CUM FOOTPATH (URBAN SECTION) OPEN COUNTRY PLAIN & ROLLING

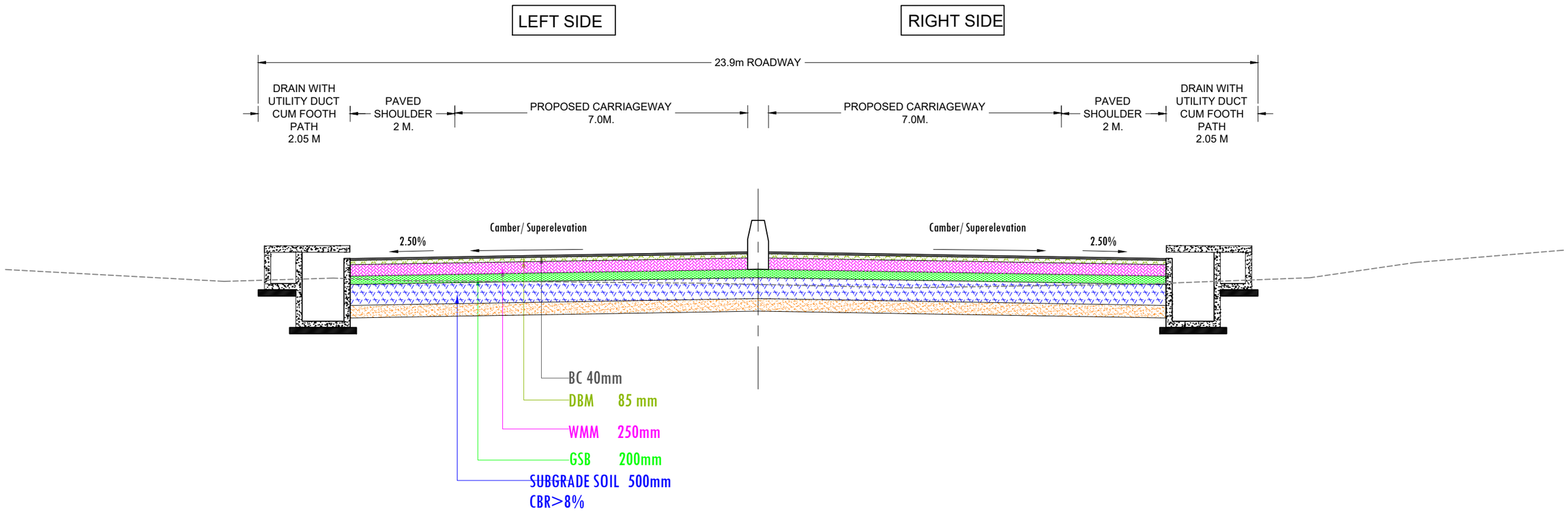

FIG. 2.1 (MODIFIED)
As per IRC SP 73: 2018 Table 2.2

NOTES:

1. ALL DIMENSIONS ARE IN METERS, UNLESS NOTED OTHERWISE.
2. DIMENSIONS SHALL NOT BE SCALED OFF FROM THE DRAWING. ONLY WRITTEN DIMENSION SHALL BE FOLLOWED

REV.	DATE	REVISIONS

CLIENT:

NATIONAL HIGHWAYS & INFRASTRUCTURE DEVELOPMENT CORPORATION LTD.
PTI BUILDING, 4 PARLIAMENT STREET
SANSAD MARG AREA, NEW DELHI - 110001

DESIGN CONSULTANT:

ANANDJIWALA INFRA ADVISORY
9, Shivranjani Shopping Center, On 132 Feet Ring Road,
Nr. Shivranjani Cross Road, Satellite, Ahmedabad - 380 015
Email: anandjiwalainfra@gmail.com

PROJECT: CONSULTANCY SERVICES FOR FEASIBILITY STUDY, PREPARATION OF DETAILED PROJECT REPORT AND PROVIDING PRE-CONSTRUCTION SERVICES FOR UPGRADATION OF EXISTING 2 LANE HIGHWAY TO 4 LANE WITH PAVED SHOULDER CONFIGURATION (NH-144A) FROM KM 26.350 (KHATI CHOWK) TO KM 30.097 (HANUMAN CHOWK) OF JAMMU - AKHNOOR SECTION IN THE UNION TERRITORY OF JAMMU & KASHMIR ON EPC BASIS

SCALE: Not to scale
Dimensions as mentioned

TITLE: TYPICAL CROSS SECTION

CLIENT APPROVAL:	SIGNATURE:		
DWG NO:– ICS/JA/NHIDCL/FS/TCS/			
DRAWN:	CHECKED:	DESIGNED:	APPROVED:
LK	SJ	SC	LA

TYPE - 08

TYPICAL CROSS SECTION FOR 2 - LANE UNDIVIDED HIGHWAY WITH SERVICE ROAD IN LHS OPEN COUNTRY PLAIN & ROLLING)

BANKING SECTION

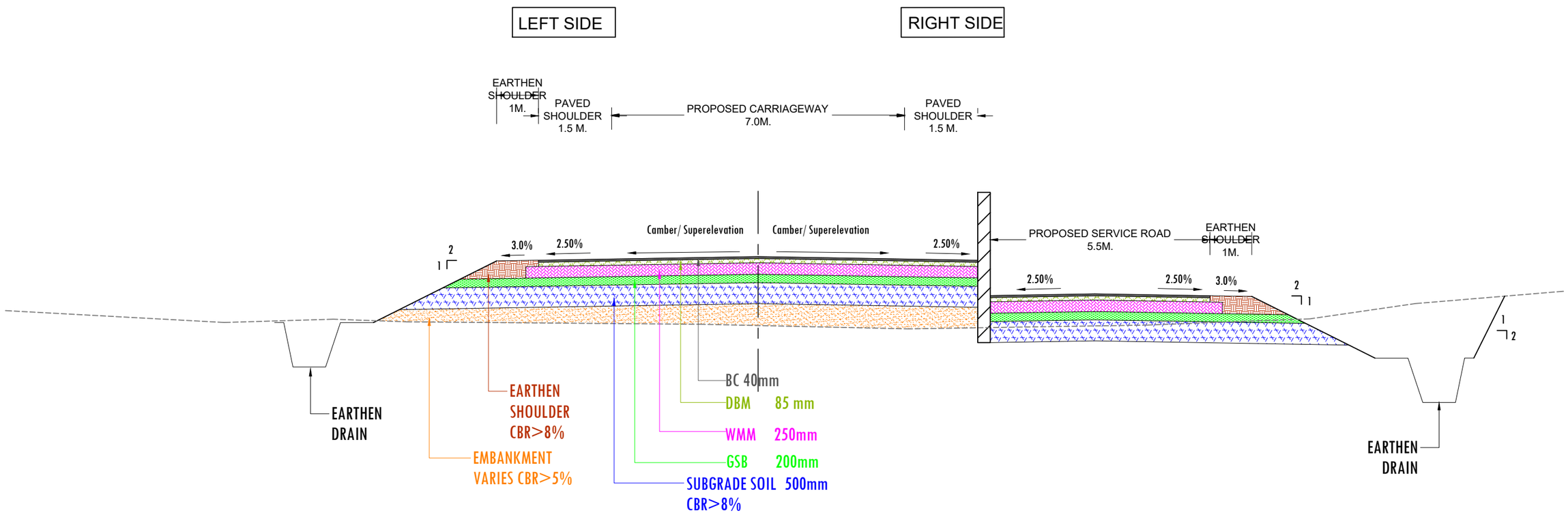

FIG. 2.1
As per IRC SP 73: 2018 Table 2.2

NOTES:

1. ALL DIMENSIONS ARE IN METERS, UNLESS NOTED OTHERWISE.
2. DIMENSIONS SHALL NOT BE SCALED OFF FROM THE DRAWING. ONLY WRITTEN DIMENSION SHALL BE FOLLOWED

REV.	DATE	REVISIONS

CLIENT:
NATIONAL HIGHWAYS & INFRASTRUCTURE DEVELOPMENT CORPORATION LTD.
PTI BUILDING, 4 PARLIAMENT STREET
SANSAD MARG AREA, NEW DELHI - 110001

DESIGN CONSULTANT:
ANANDJIWALA INFRA ADVISORY
9, Shivranjani Shopping Center, On 132 Feet Ring Road,
Nr. Shivranjani Cross Road, Satellite, Ahmedabad - 380 015
Email: anandjiwalainfra@gmail.com

PROJECT: CONSULTANCY SERVICES FOR FEASIBILITY STUDY, PREPARATION OF DETAILED PROJECT REPORT AND PROVIDING PRE-CONSTRUCTION SERVICES FOR UPGRADATION OF EXISTING 2 LANE HIGHWAY TO 4 LANE WITH PAVED SHOULDER CONFIGURATION (NH-144A) FROM KM 26.350 (KHATI CHOWK) TO KM 30.097 (HANUMAN CHOWK) OF JAMMU - AKHNOOR SECTION IN THE UNION TERRITORY OF JAMMU & KASHMIR ON EPC BASIS

SCALE: Not to scale
Dimensions as mentioned

TITLE: TYPICAL CROSS SECTION

CLIENT APPROVAL: | SIGNATURE:

DWG NO:– ICS/JA/NHIDCL/FS/TCS/

DRAWN:	CHECKED:	DESIGNED:	APPROVED:
LK	SJ	SC	LA

STRUCTURAL DRAWING – CUILVERT & BRIDGES

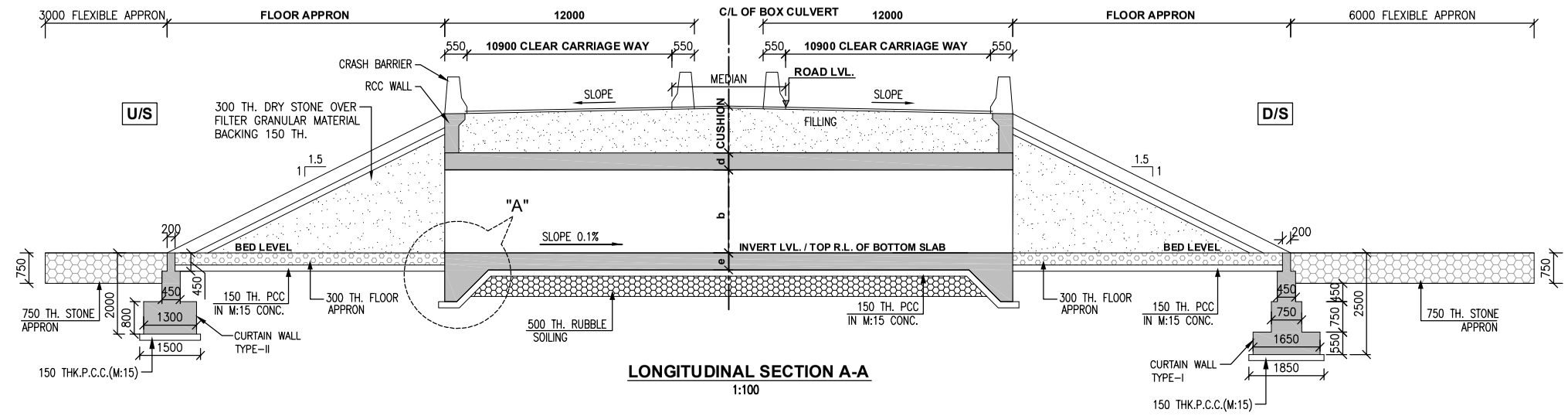

LONGITUDINAL SECTION A-A
1:100

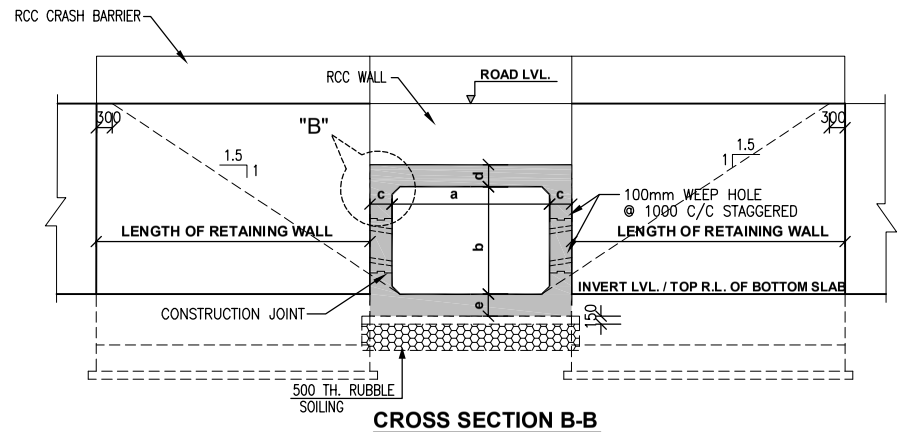

CROSS SECTION B-B
1:100

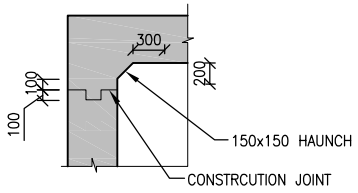

DETAILS AT "B"
1:50

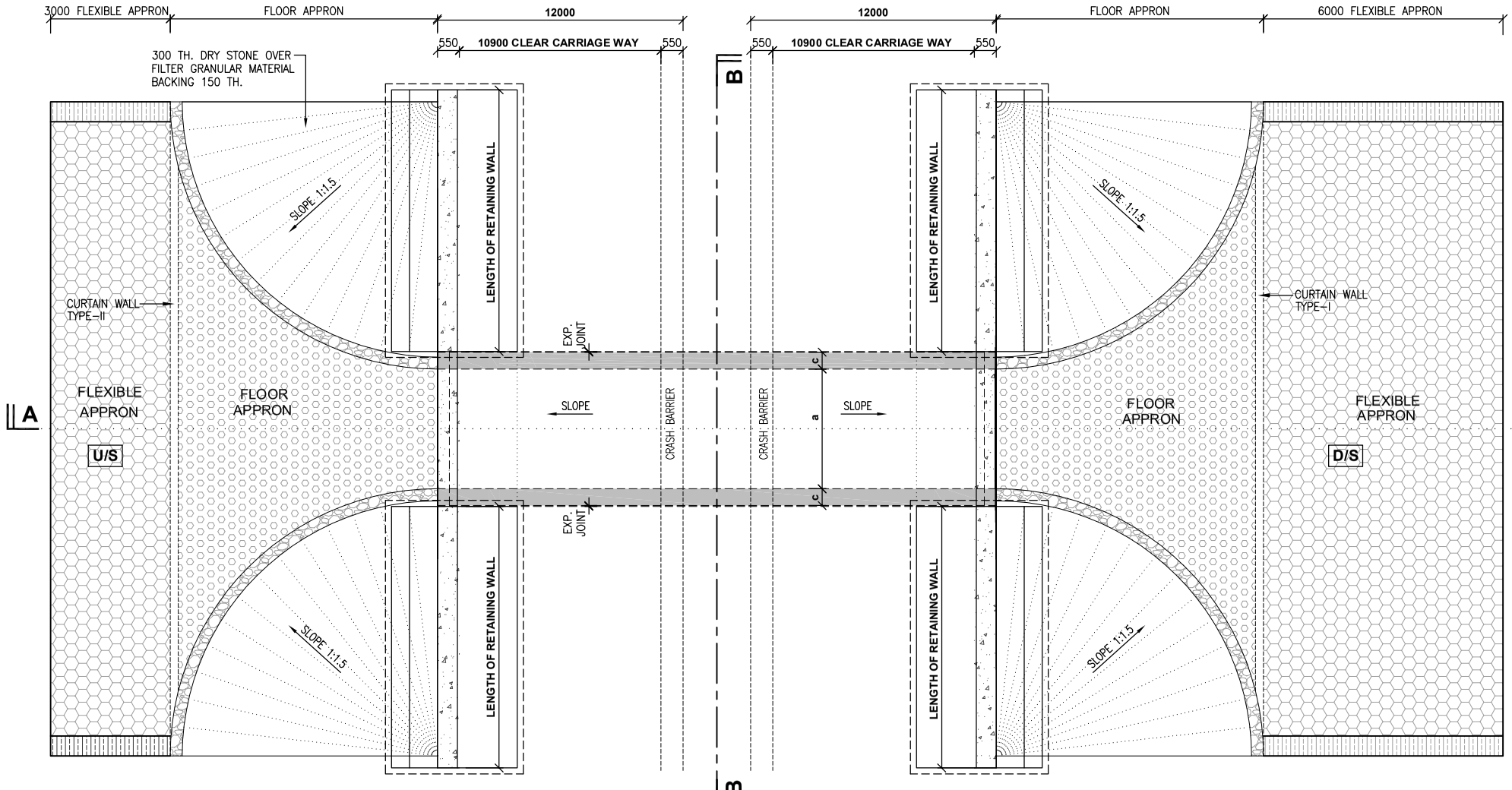

PLAN
1:100

ELEMENTS	CONCRETE GRADE
(a) BOX CELL STRUCTURE	M:40
(b) RCC RETAINING WALL	M:40
(c) PCC CURTAIN & TOE WALL	M:20
(d) LEVELLING COURSE (P.C.C.)	M:15
(e) RCC CRASH BARRIER	M:40
(f) RCC WALL	M:40

NOTES:-

(1) ALL DIMENSIONS ARE IN MILLIMETER.
(2) DO NOT SCALE THIS DRAWING.
(3) THIS DRAWING MUST BE READ IN CONJUNCTION WITH ALL OTHER RELEVANT DRAWINGS.

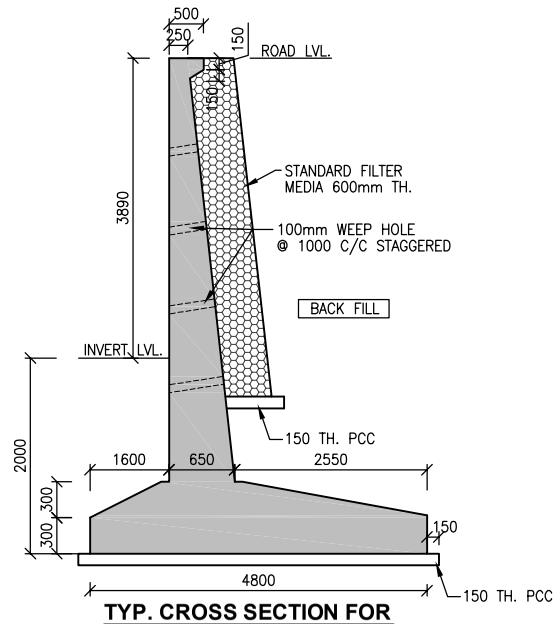

TYP. CROSS SECTION FOR RCC RETAINING WALL

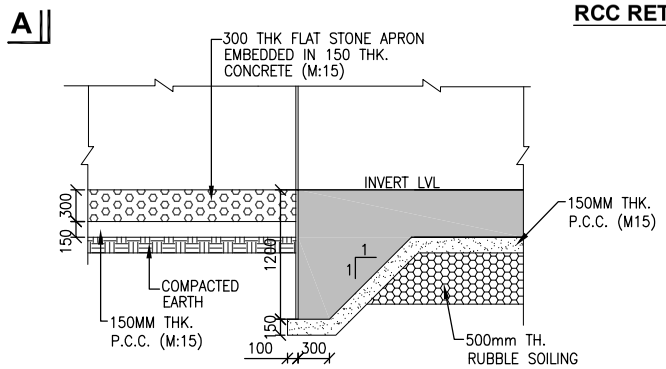

DETAIL AT "A"
1:50

Sr. No.	Design Chainage	No. x w x H	Length	a	b	c	d	e	FINISHED ROAD LEVELS At Center	At LHS	At RHS	LEVELS Foundation Lvl.	PCC Bottom	Top of Bott. Slab	Bot of Top Slab. @ center	Top of Top Slab@ Center	Top of Top Slab @ LHS	Top of Top Slab @ RHS	EARTH CUSHION
C2	26+818	1x2.0mx3.0m	24	2.000	3.000	0.300	0.300	0.300	339.900	339.660	339.660	335.510	335.760	336.010	339.010	339.310	339.310	339.310	0.590m

REV.	DATE	REVISIONS

CLIENT:
NATIONAL HIGHWAYS & INFRASTRUCTURE DEVELOPMENT CORPORATION LTD.
PTI BUILDING, 4 PARLIAMENT STREET
SANSAD MARG AREA, NEW DELHI - 110001

DESIGN CONSULTANT:
ANANDJIWALA INFRA ADVISORY
9, Shivranjani Shopping Center, On 132 Feet Ring Road
Nr. Shivranjani Cross Road, Satellite, Ahmedabad - 380 015
Email: anandjiwalainfra@gmail.com

PROJECT:
CONSULTANCY SERVICES FOR FEASIBILITY STUDY, PREPARATION OF DETAILED PROJECT REPORT AND PROVIDING PRE-CONSTRUCTION SERVICES FOR UPGRADATION OF EXISTING 2 LANE HIGHWAY TO 4 LANE WITH PAVED SHOULDER CONFIGURATION (NH-144A) FROM KM 26.350 (KHATI CHOWK) TO KM 30.097 (HANUMAN CHOWK) OF JAMMU - AKHNOOR SECTION IN THE UNION TERRITORY OF JAMMU & KASHMIR ON EPC BASIS

SCALE AT A3 SIZE DRAWING
20 0 20 40 60 80 100
2 0 2 4 6 8 10

TITLE:
GAD OF SINGLE CELL BOX CULVERT 2.0x3.0m WITH CUSHION AT CH: 26+818

CLIENT APPROVAL: | SIGNATURE:

DWG NO:-

DRAWN:	CHECKED:	DESIGNED:	APPROVED:
LK	SJ	SC	LA

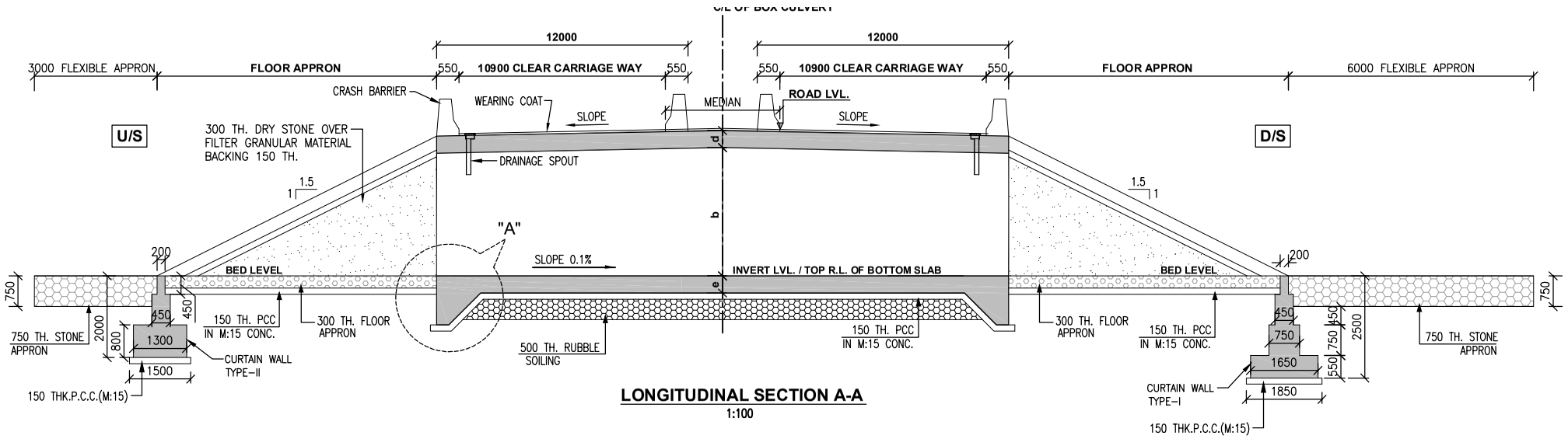

LONGITUDINAL SECTION A-A
1:100

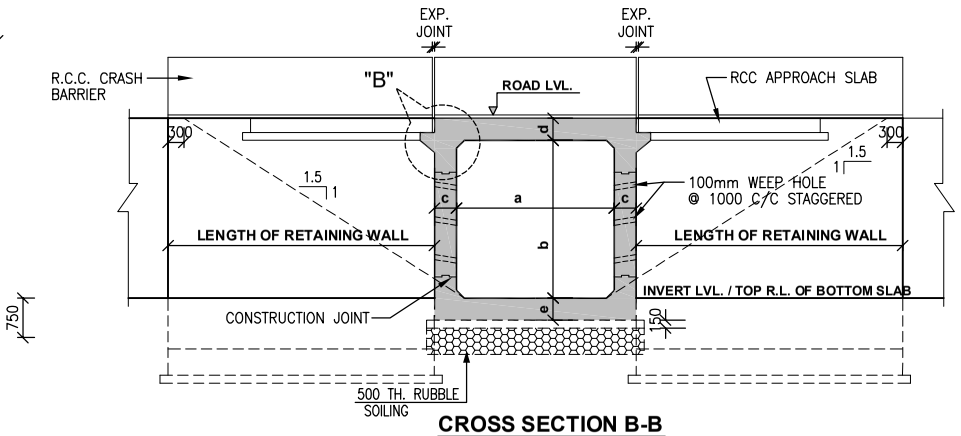

CROSS SECTION B-B
1:100

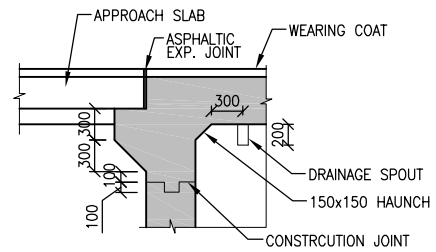

DETAILS AT "B"
1:50

ELEMENTS	CONCRETE GRADE
(a) BOX CELL STRUCTURE	M:40
(b) RCC RETAINING WALL	M:40
(c) PCC CURTAIN & TOE WALL	M:20
(d) LEVELLING COURSE (P.C.C.)	M:15
(e) RCC CRASH BARRIER	M:40
(f) RCC APPROACH SLAB	M:30

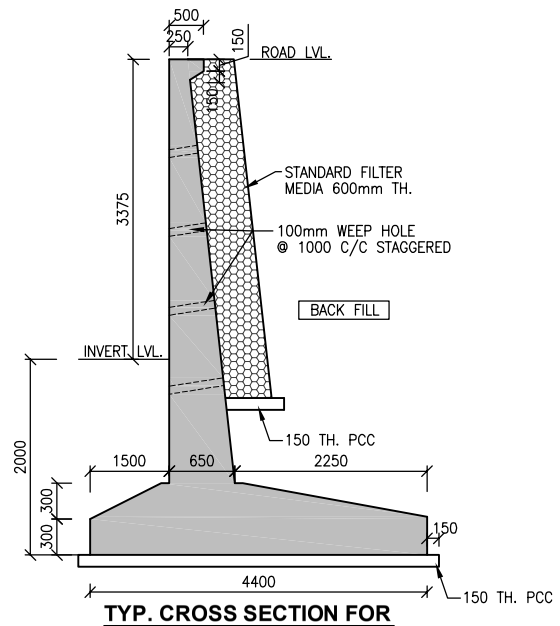

TYP. CROSS SECTION FOR RCC RETAINING WALL

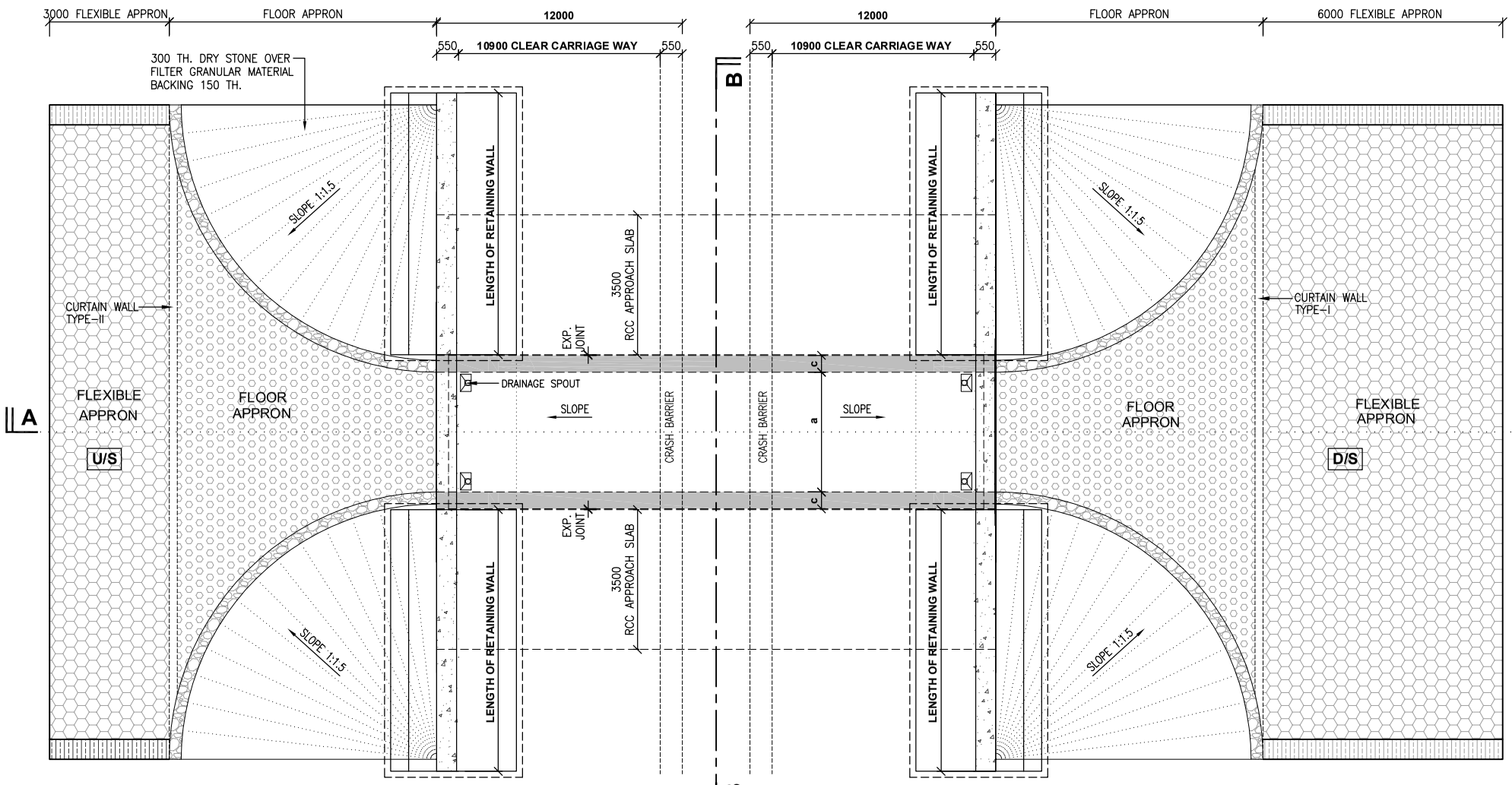

PLAN
1:100

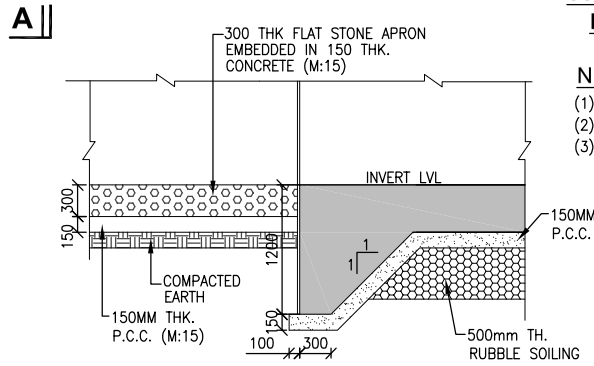

DETAIL AT "A"
1:50

NOTES:-
(1) ALL DIMENSIONS ARE IN MILLIMETER.
(2) DO NOT SCALE THIS DRAWING.
(3) THIS DRAWING MUST BE READ IN CONJUNCTION WITH ALL OTHER RELEVANT DRAWINGS.

									FINISHED ROAD LEVELS			LEVELS						
Sr. No.	Design Chainage	No. x w x H	Length	a	b	c	d	e	At Center	At LHS	At RHS	Foundation Lvl.	PCC Bottom	Top of Bott. Slab	Bot of Top Slab. @ center	Top of Top Slab@ Center	Top of Top Slab @ LHS	Top of Top Slab @ RHS
C1	26+843	1x2.0mx3.0m	24	2.000	3.000	0.300	0.300	0.300	339.888	339.648	339.648	336.213	336.063	336.513	339.513	339.813	339.573	339.573

REV.	DATE	REVISIONS

CLIENT:
NATIONAL HIGHWAYS & INFRASTRUCTURE DEVELOPMENT CORPORATION LTD.
PTI BUILDING, 4 PARLIAMENT STREET
SANSAD MARG AREA, NEW DELHI - 110001

DESIGN CONSULTANT:
ANANDJIWALA INFRA ADVISORY
9, Shivranjani Shopping Center, On 132 Feet Ring Road
Nr. Shivranjani Cross Road, Satellite, Ahmedabad - 380 015
Email: anandjiwalainfra@gmail.com

PROJECT:
CONSULTANCY SERVICES FOR FEASIBILITY STUDY, PREPARATION OF DETAILED PROJECT REPORT AND PROVIDING PRE-CONSTRUCTION SERVICES FOR UPGRADATION OF EXISTING 2 LANE HIGHWAY TO 4 LANE WITH PAVED SHOULDER CONFIGURATION (NH-144A) FROM KM 26.350 (KHATI CHOWK) TO KM 30.097 (HANUMAN CHOWK) OF JAMMU - AKHNOOR SECTION IN THE UNION TERRITORY OF JAMMU & KASHMIR ON EPC BASIS

SCALE AT A3 SIZE DRAWING

TITLE:
GAD OF SINGLE CELL BOX CULVERT 2.0x3.0m WITHOUT CUSHION AT CH: 26+843

CLIENT APPROVAL: | SIGNATURE:

DWG NO:-

DRAWN:	CHECKED:	DESIGNED:	APPROVED:
LK	SJ	SC	LA

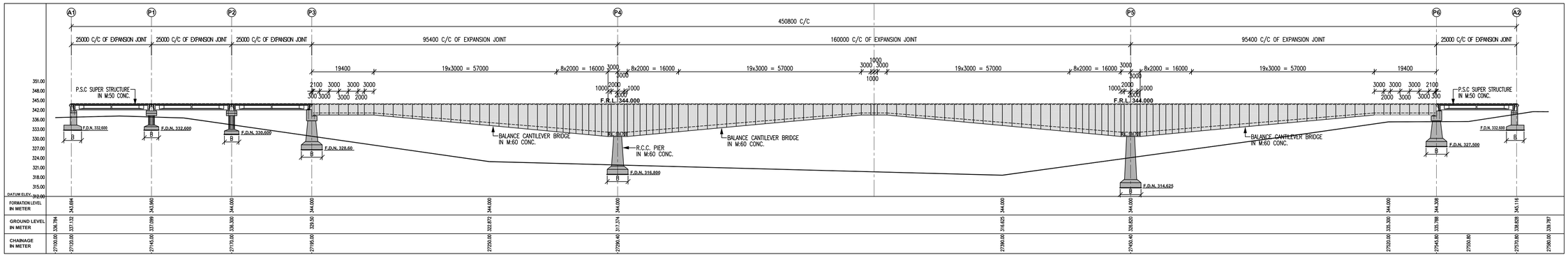

SECTIONAL ELEVATION OF BRIDGE

SCALE :- 1:15

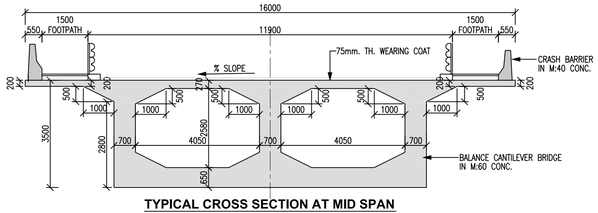

TYPICAL CROSS SECTION AT MID SPAN

SCALE :- 1:100

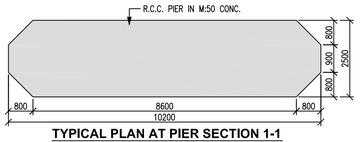

TYPICAL PLAN AT PIER SECTION 1-1

SCALE :- 1:100

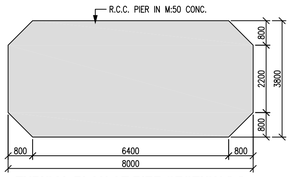

TYPICAL PLAN AT PIER SECTION 2-2

SCALE :- 1:100

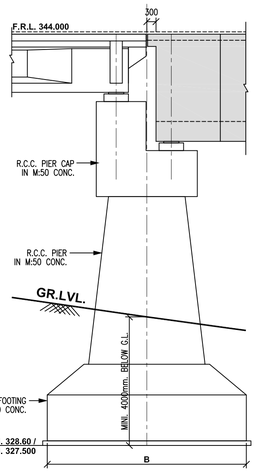

TYPICAL SECTION AT PIER - P3 & P6

SCALE :- 1:100

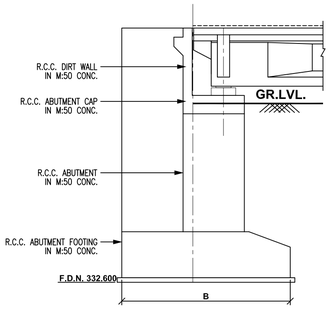

TYPICAL SECTION AT ABUTMENT - A1 & A2

SCALE :- 1:100

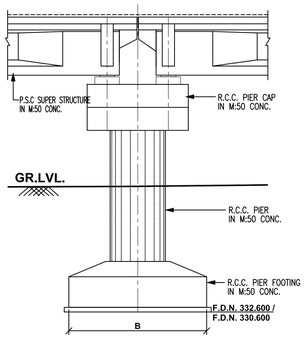

TYPICAL SECTION AT PIER- P1& P2

SCALE :- 1:100

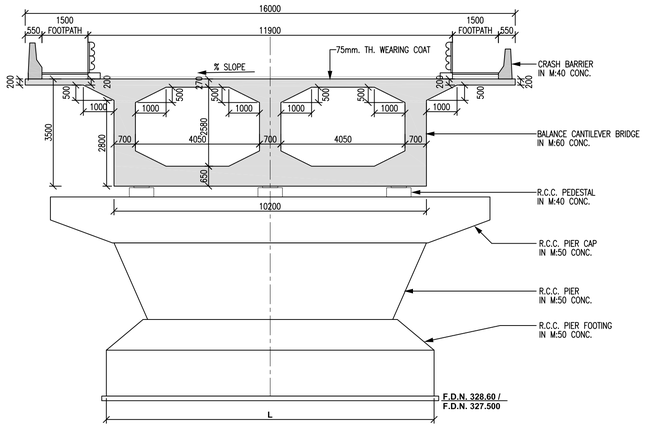

TYPICAL CROSS SECTION AT PIER - P3 & P6

SCALE :- 1:100

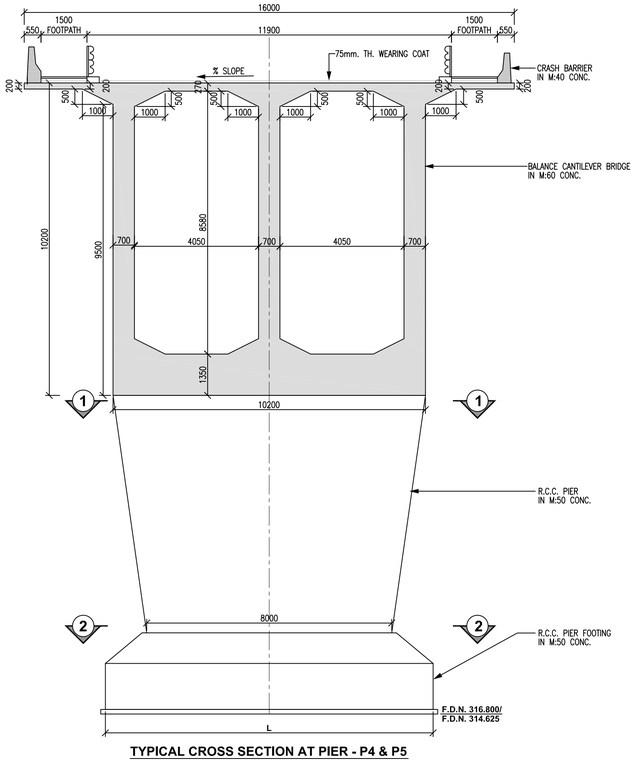

TYPICAL CROSS SECTION AT PIER - P4 & P5

SCALE :- 1:100

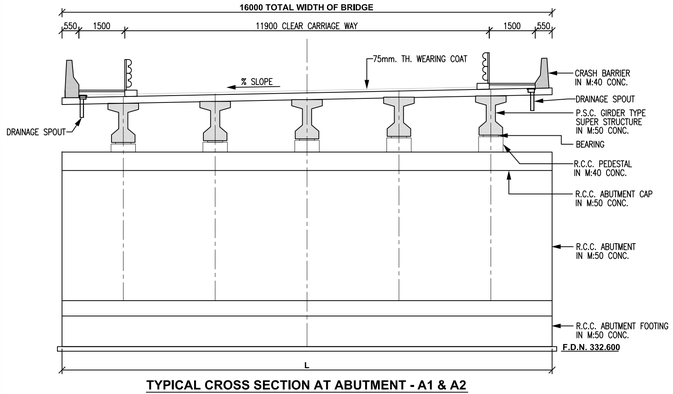

TYPICAL CROSS SECTION AT ABUTMENT - A1 & A2

SCALE :- 1:100

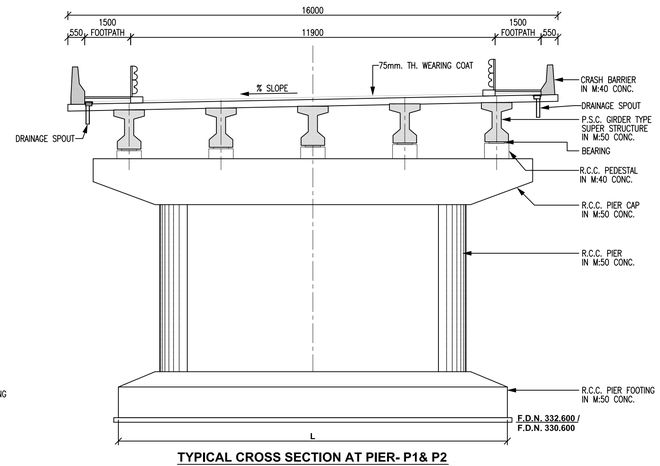

TYPICAL CROSS SECTION AT PIER- P1& P2

SCALE :- 1:100

LEGEND:-

F.R.L. = FINISHED ROAD LEVEL
H.F.L. = HIGHEST FLOOD LEVEL
G.L. = GROUND LEVEL
FDN. = FOUNDATION LEVEL
RL. = REDUCED LEVEL

NOTES:-

1. ALL DIMENSIONS ARE IN MILLIMETER UNLESS OTHERWISE SPECIFIED AND LEVELS ARE IN METERS.
2. DIMENSIONS ARE NOT TO BE SCALED ONLY WRITTEN DIMENSIONS ARE TO BE FOLLOWED.
3. DURING EXECUTION FORMATION LEVEL, BED LEVEL & FOUNDATION LEVEL SHALL BE VERIFIED AT SITE.
4. FOR DETAILS OF ALIGNMENT AND GEOMETRY REFER RELEVANT ROAD DRAWINGS.
5. ALL STRUCTURAL DIMENSIONS SHOWN ARE TENTATIVE & SUBJECT TO CHANGE AS PER DETAIL DESIGN.
6. ARRANGEMENT OF PILE SHOWN ARE TENTATIVE & SUBJECT TO CHANGE AS PER DETAIL DESIGN.
7. THE SPAN ARRANGEMENT AND DIMENSIONS OF ALL STRUCTURAL COMPONENTS SHOWN IN THIS DRAWING ARE TENTATIVE AND MAY CHANGE DURING DETAILED DESIGN. THE WORK SHALL BE CARRIED OUT AS PER DESIGN AND DRAWING APPROVED BY DEPARTMENT.
8. THE BRIDGE IS TO BE DESIGNED FOR ONE LANE OF CLASS '70R' & ONE LANE OF CLASS A LOADING OR THREE LANE OF CLASS 'A' LOADING WHICHEVER IS SEVERE FOR EACH THREE LANE CARRIAGEWAY. AS PER IRC 6 – 2014.
9. BEARING: SPHERICAL BEARING & TAR PAPER BEARING
10. EXPANSION JOINT: STRIP SEAL JOINT
11. MINIMUM CONCRETE GRADE:
    P.C.C.:– M:15
    BALANCE CANTILEVER BRIDGE :– M:60
    PIER, PIER CAP, P.S.C. GIRDER, ABUTMENT SUB–STRUCTURE, RETURN :– M:50
    CRASH BARRIER, PEDESTAL :– M:40
12. WEARING COAT–75mm THK. BITUMINOUS CONC.
13. THE BRIDGE IS DESIGNED FOR SEISMIC FORCES APPLICABLE TO ZONE–IV.
14. ALL UNTENSIONED REINFORCEMENT SHALL BE TMT BARS WITH GRADE DESIGNATION Fe–500D CONFORMING TO IS:1786 STANDARD.
15. LAYING, COMPACTION AND EXTENT OF BACKFILL BEHIND ABUTMENTS AND RETAINING WALLS SHALL CONFORM TO APPENDIX–6 OF IRC:78–2014.
16. BACK FILLING BEHIND ABUTMENTS AND RETAINING WALLS SHALL CONSIST OF SELECTED EARTH CONFORMING TO APPENDIX–6 OF IRC:78–2014 HAVING PROPERTIES C=0, ϕ=30° AND d=18KN/m^3
17. WEEP HOLES SPACED AT 1000c/c BOTH HORIZONTALLY AND VERTICALLY SHALL BE PROVIDED IN A STAGGERED MANNER IN ABUTMENTS AND RETAINING WALLS FROM 300mm ABOVE GROUND LEVEL TO HFL.

REV.	DATE	REVISIONS

CLIENT:
NATIONAL HIGHWAYS & INFRASTRUCTURE DEVELOPMENT CORPORATION LTD.
PTI BUILDING, 4 PARLIAMENT STREET
SANSAD MARG AREA, NEW DELHI - 110001

DESIGN CONSULTANT:
ANANDJIWALA INFRA ADVISORY
9, Shivranjani Shopping Center, On 132 Feet Ring Road
Nr. Shivranjani Cross Road, Satellite, Ahmedabad - 380 015
Email: anandjiwalainfra@gmail.com

PROJECT:
CONSULTANCY SERVICES FOR FEASIBILITY STUDY, PREPARATION OF DETAILED PROJECT REPORT AND PROVIDING PRE-CONSTRUCTION SERVICES FOR UPGRADATION OF EXISTING 2 LANE HIGHWAY TO 4 LANE WITH PAVED SHOULDER CONFIGURATION (NH-144A) FROM KM 26.350 (KHATI CHOWK) TO KM 30.097 (HANUMAN CHOWK) OF JAMMU - AKHNOOR SECTION IN THE UNION TERRITORY OF JAMMU & KASHMIR ON EPC BASIS

SCALE AT A3 SIZE DRAWING
20 0 20 40 60 80 100
2 0 2 4 6 8 10

TITLE:
GENERAL ARRANGEMENT DRAWING OF BRIDGE AT CH. 27120 TO 27570.80

CLIENT APPROVAL: | SIGNATURE:

DWG NO:–

DRAWN:	CHECKED:	DESIGNED:	APPROVED:
LK	SJ	SC	LA

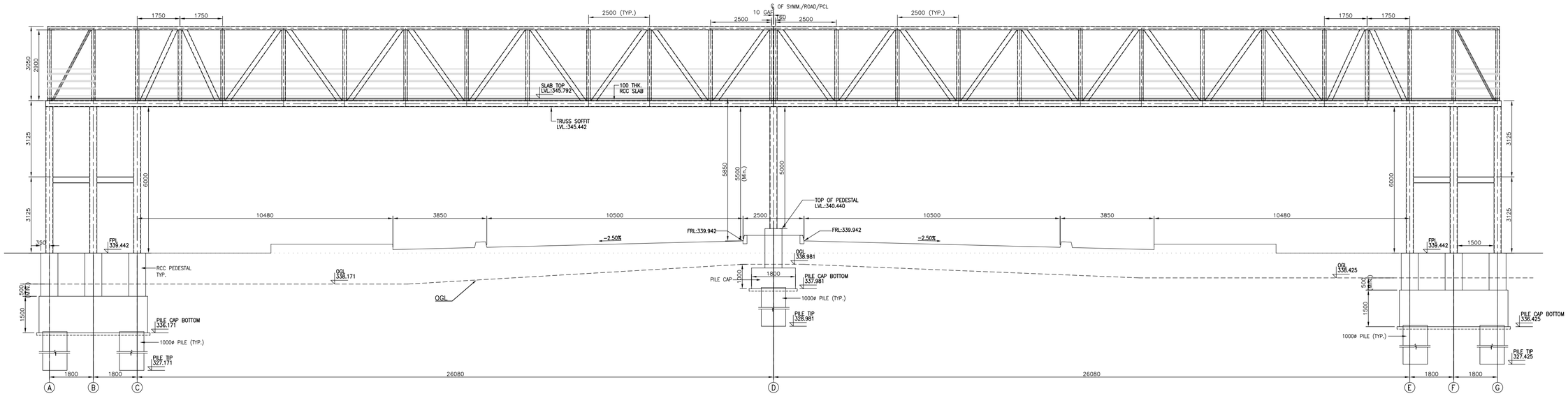

SECTION A–A

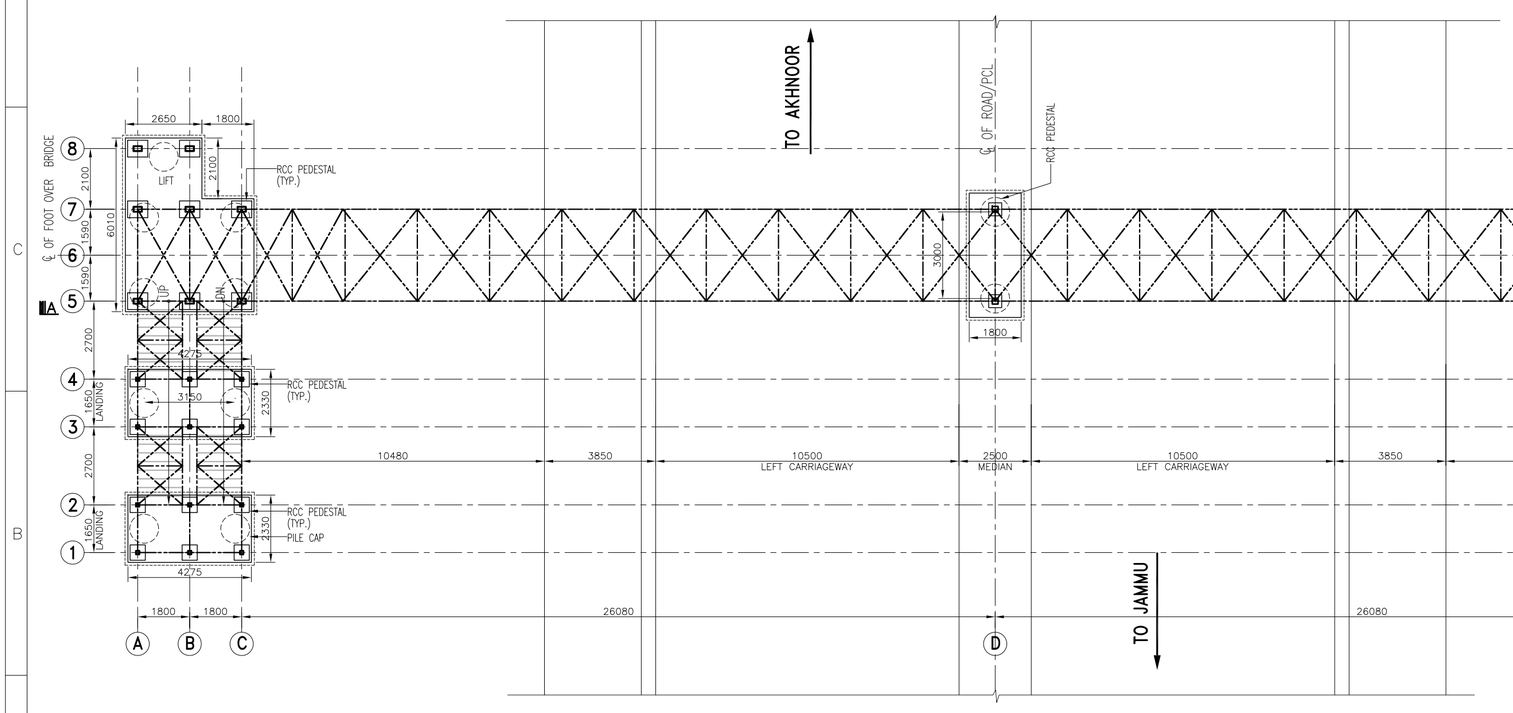

PLAN OF FOOT OVER BRIDGE

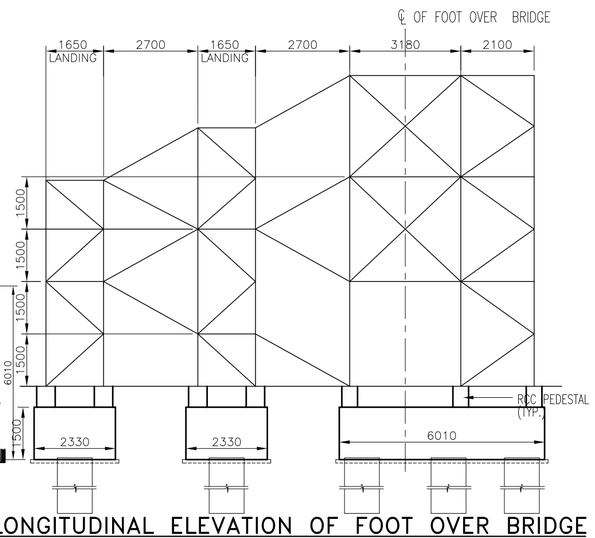

LONGITUDINAL ELEVATION OF FOOT OVER BRIDGE

NOTES:

1. ALL DIMENSIONS ARE IN mm. UNLESS OTHERWISE MENTIONED. ONLY WRITTEN DIMENSIONS ARE TO BE FOLLOWED.NO DIMENSION IS TO BE SCALED.
2. ALL WELDS ARE 6mm FILLET WELD UNLESS OTHERWISE SPECIFIED.
3. THE CUT LENGTH OF MEMBERS AND THE NOS. REQUIRED SHALL BE DETERMINED AT SITE BY FULL SCALE LAYOUT.
4. GRADE OF ALL STRUCTURAL STEEL SHALL CONFIRM TO LS. 2062–2010.
5. ALL BOLTS & PINS ARE OF 8.8 GRADE UNLESS OTHERWISE SPECIFIED.
6. CONCRETE GRADE SHALL BE M25.
7. GRADE OF STRUCTURAL STEEL : E250, YST 240.
8. GRADE OF STEEL : Fe 500.
9. ALL STRUCTURAL STEEL MEMBERS SHOULD BE TREATED WITH PRIMER AND ANTI–CORROSIVE PAINTS/COATING AS PER APPLICABLE SPECIFICATION.
10. IN ACCORDANCE WITH CLAUSE 6.2.2 OF IS 816:1969, THE SIZE OF FILLET WELD SHALL NOT BE LESS THAN 3mm NOR MORE THAN THE THICKNESS IF THE THINNER PLATE JOINED.

REV	DATE	DESCRIPTION	DESIGNED	DRAWN	CHECKED	APPROVED
R0	18.08.21	ISSUED FOR APPROVAL	BJS	MPT	GMS	GMS

CLIENT:
NATIONAL HIGHWAYS & INFRASTRUCTURE DEVELOPMENT CORPORATION LTD.
PTI BUILDING, 4 PARLIAMENT STREET
SANSAD MARG AREA, NEW DELHI-110001

DESIGN CONSULTANTS :
ANANDJIWALA INFRA ADVISORY
9, SHIVRANJANI SHOPPING CENTER, ON 132 FEET RING ROAD, NR. SHIVRANJANI CRROSS ROAD, SATELLITE, AHMEDABAD-380015
Email: anandjiwalainfra@gmail.com

PROJECT :
CONSULTANCY SERVICES FOR FEASIBILITY STUDY, PREPARATION OF DETAILED PROJECT REPORT AND PROVIDING PRE-CONSTRUCTION SERVICES FOR UPGRADATION OF EXISTING 2-LANE HIGHWAY TO 4-LANE WITH PAVED SHOULDER CONFIGURATION (NH-144A) FROM KM 26.350 (KHATI CHOWK) TO KM 30.097 (HANUMAN CHOWK) OF JAMMU-AKHNOOR SECTION IN THE UNION TERRITORY OF JAMMU & KASHMIR ON EPC BASIS

DESIGNED	BJS
DRAWN	MPT
CHECKED	GMS
APPROVED	GMS
DATE	18.08.2021
SCALE:	AS SHOWN

TITLE : FOOT OVER BRIDGE AT DESIGN CH:26+880.00 GENERAL ARRANGEMENT DRAWING 2x26.080M SPAN

REV. R0
SIZE A2

DRAWING NO : NHIDCL/JA/STR/FOB/26+880/GA/101

SHEET 01 OF 01

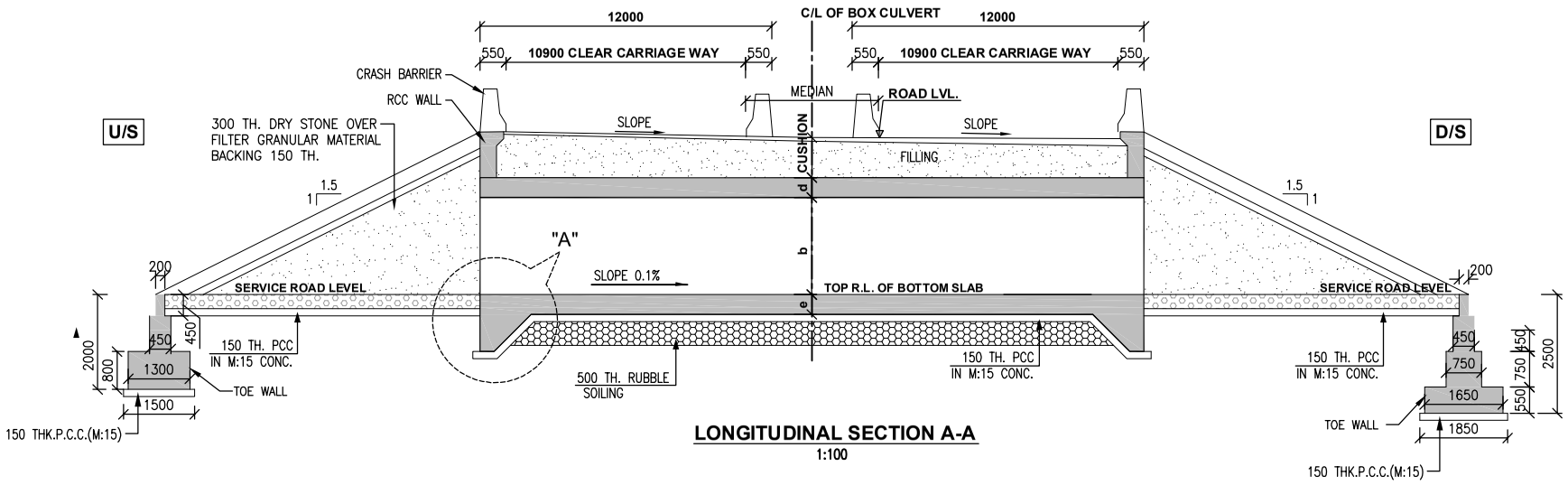

LONGITUDINAL SECTION A-A
1:100

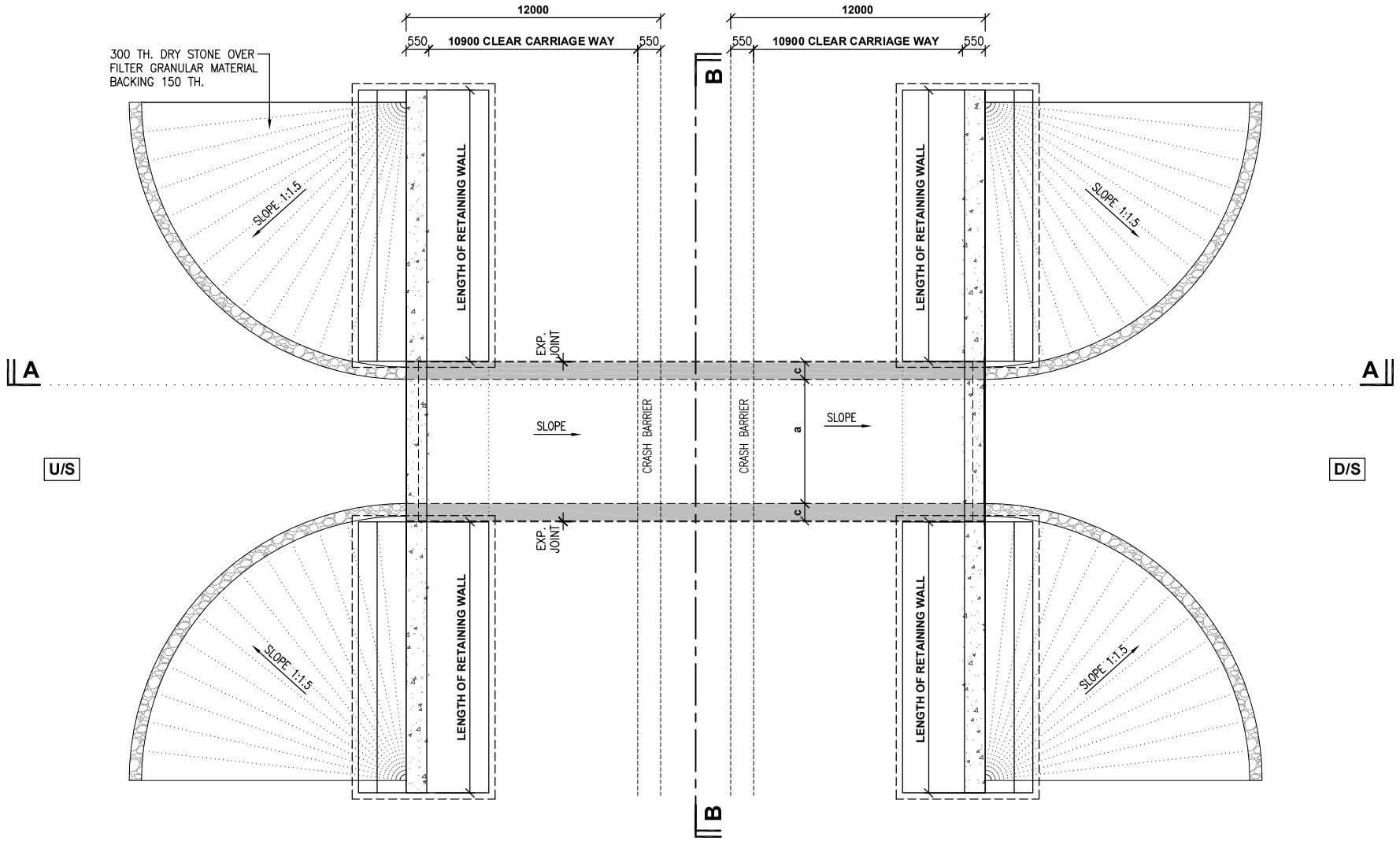

PLAN
1:100

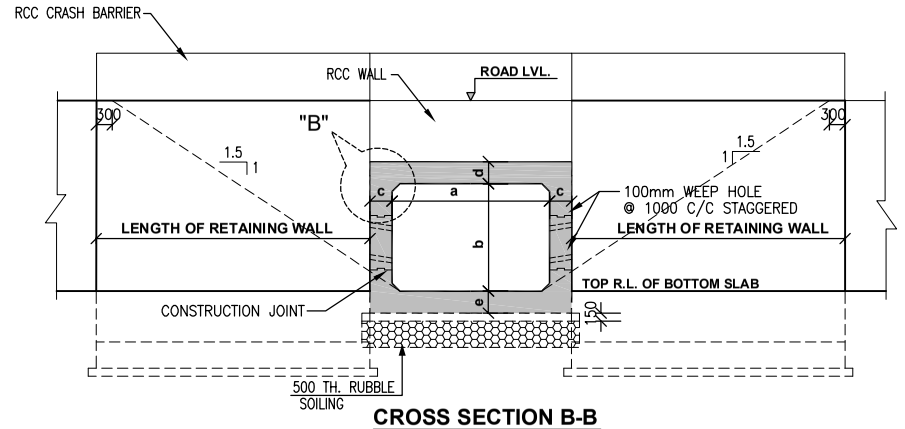

CROSS SECTION B-B
1:100

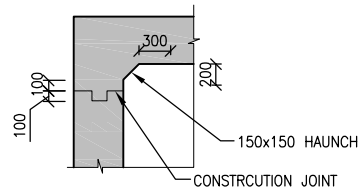

DETAILS AT "B"
1:50

ELEMENTS	CONCRETE GRADE
(a) BOX CELL STRUCTURE	M:40
(b) RCC RETAINING WALL	M:40
(c) PCC CURTAIN & TOE WALL	M:20
(d) LEVELLING COURSE (P.C.C.)	M:15
(e) RCC CRASH BARRIER	M:40
(f) RCC WALL	M:40

NOTES:-

(1) ALL DIMENSIONS ARE IN MILLIMETER.
(2) DO NOT SCALE THIS DRAWING.
(3) THIS DRAWING MUST BE READ IN CONJUNCTION WITH ALL OTHER RELEVANT DRAWINGS.

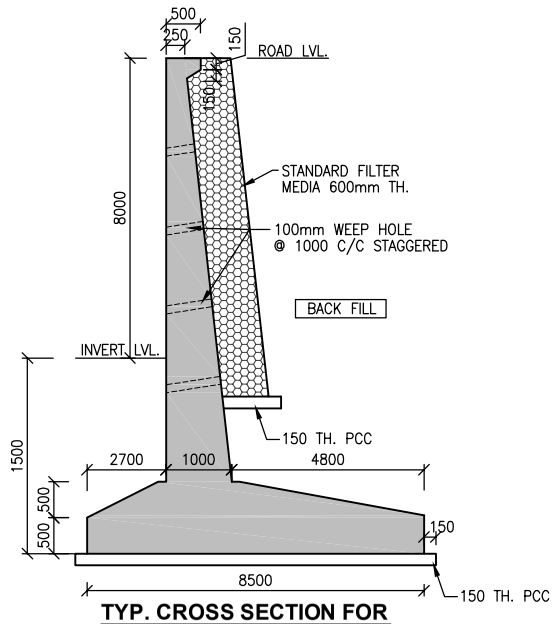

TYP. CROSS SECTION FOR RCC RETAINING WALL

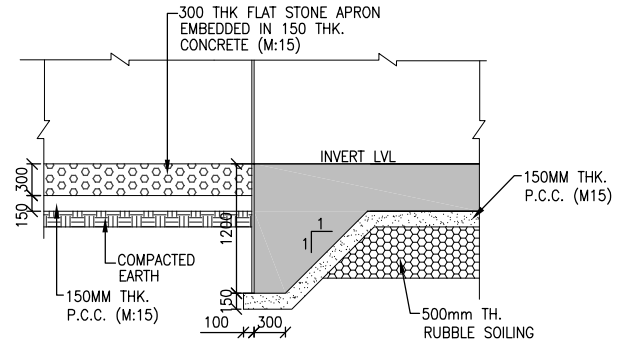

DETAIL AT "A"
1:50

Sr. No.	Design Chainage	No. x w x H	Length	a	b	c	d	e	FINISHED ROAD LEVELS At Center	At LHS	At RHS	LEVELS Foundation Lvl.	PCC Bottom	Top of Bott. Slab	Bot of Top Slab. @ center	Top of Top Slab@ Center	Top of Top Slab @ LHS	Top of Top Slab @ RHS	EARTH CUSHION
C3	27+649	1x12.0mx6.0m	24	12.00	6.000	0.700	0.700	0.750	351.019	351.463	350.575	341.569	341.419	342.319	348.319	349.019	349.019	349.019	2.000m

REV.	DATE	REVISIONS

CLIENT:
NATIONAL HIGHWAYS & INFRASTRUCTURE DEVELOPMENT CORPORATION LTD.
PTI BUILDING, 4 PARLIAMENT STREET
SANSAD MARG AREA, NEW DELHI - 110001

DESIGN CONSULTANT:
ANANDJIWALA INFRA ADVISORY
9, Shivranjani Shopping Center, On 132 Feet Ring Road
Nr. Shivranjani Cross Road, Satellite, Ahmedabad - 380 015
Email: anandjiwalainfra@gmail.com

PROJECT:
CONSULTANCY SERVICES FOR FEASIBILITY STUDY, PREPARATION OF DETAILED PROJECT REPORT AND PROVIDING PRE-CONSTRUCTION SERVICES FOR UPGRADATION OF EXISTING 2 LANE HIGHWAY TO 4 LANE WITH PAVED SHOULDER CONFIGURATION (NH-144A) FROM KM 26.350 (KHATI CHOWK) TO KM 30.097 (HANUMAN CHOWK) OF JAMMU - AKHNOOR SECTION IN THE UNION TERRITORY OF JAMMU & KASHMIR ON EPC BASIS

SCALE AT A3 SIZE DRAWING
20 0 20 40 60 80 100
2 0 2 4 6 8 10

TITLE:
GAD OF VUP 1x12.0x6.0m WITH CUSHION AT CH: 27+649

CLIENT APPROVAL: | SIGNATURE:

DWG NO:-

DRAWN:	CHECKED:	DESIGNED:	APPROVED:
LK	SJ	SC	LA

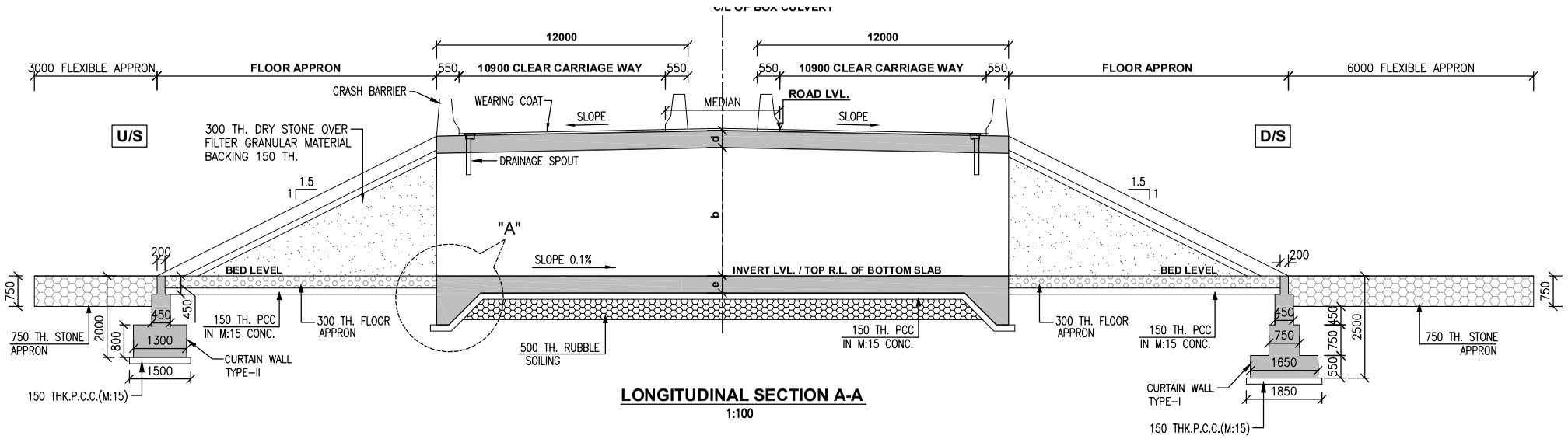

LONGITUDINAL SECTION A-A
1:100

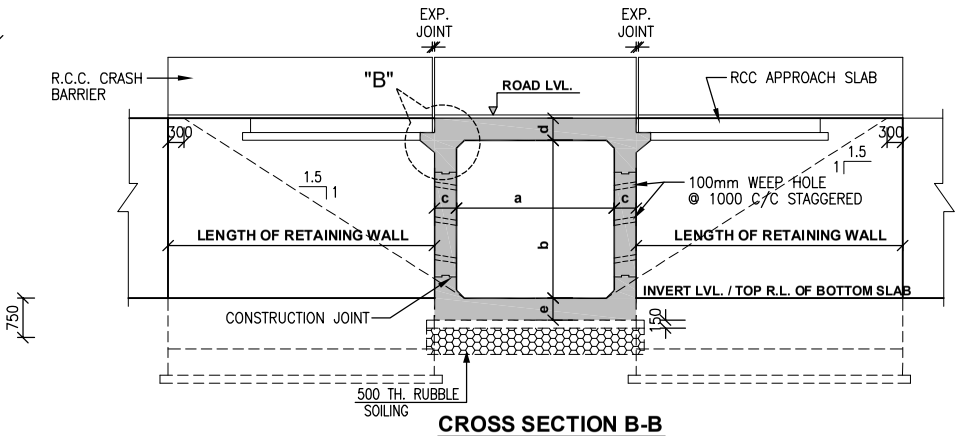

CROSS SECTION B-B
1:100

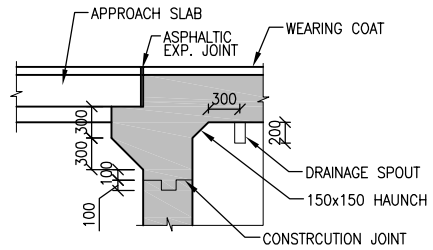

DETAILS AT "B"
1:50

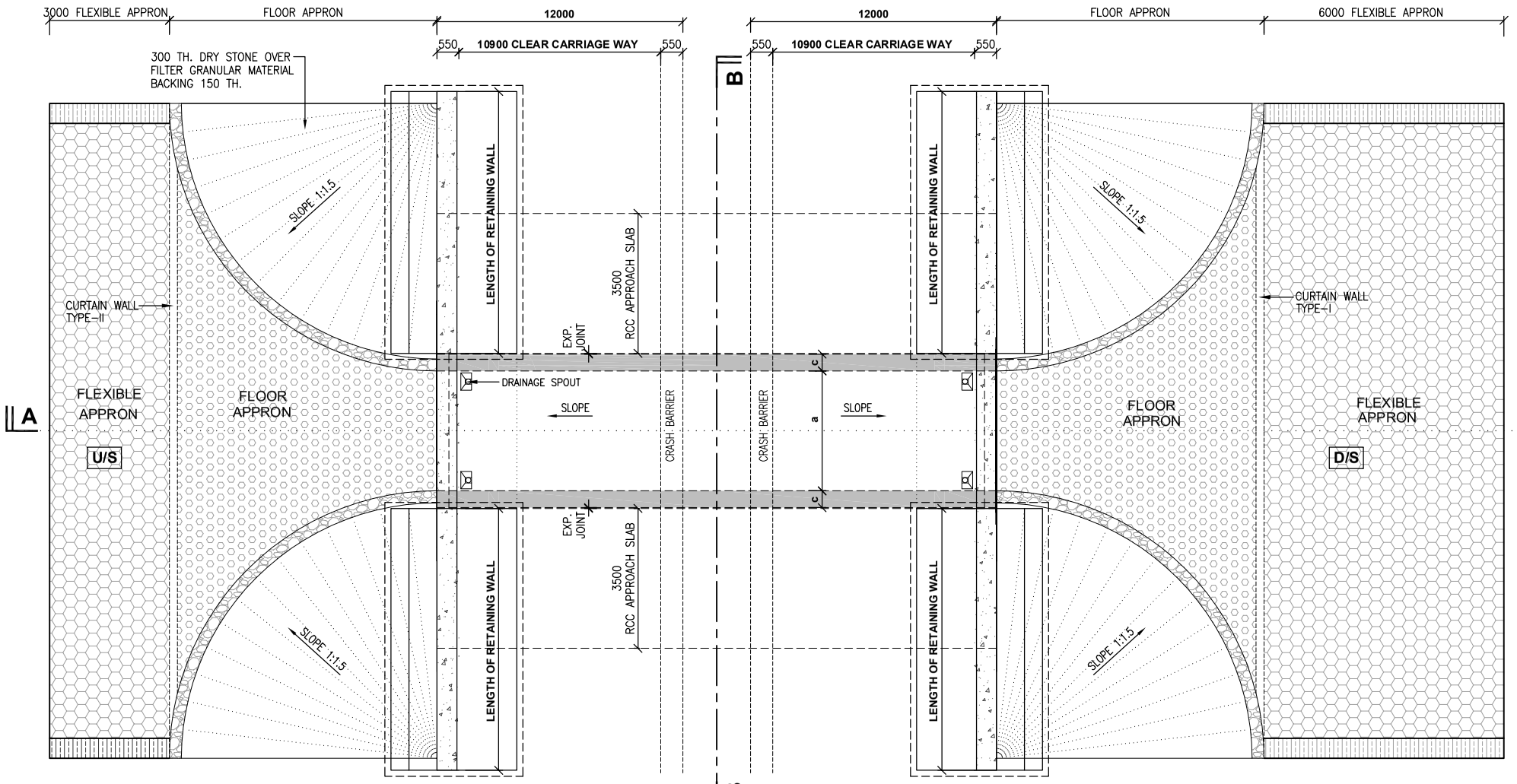

PLAN
1:100

ELEMENTS	CONCRETE GRADE
(a) BOX CELL STRUCTURE	M:40
(b) RCC RETAINING WALL	M:40
(c) PCC CURTAIN & TOE WALL	M:20
(d) LEVELLING COURSE (P.C.C.)	M:15
(e) RCC CRASH BARRIER	M:40
(f) RCC APPROACH SLAB	M:30

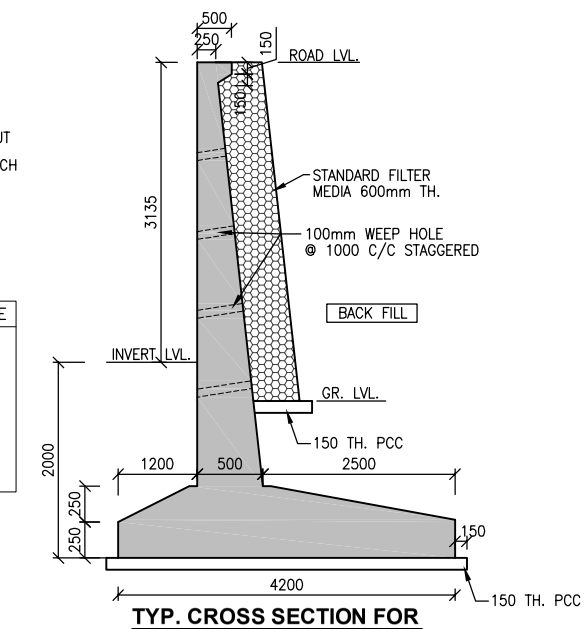

TYP. CROSS SECTION FOR RCC RETAINING WALL

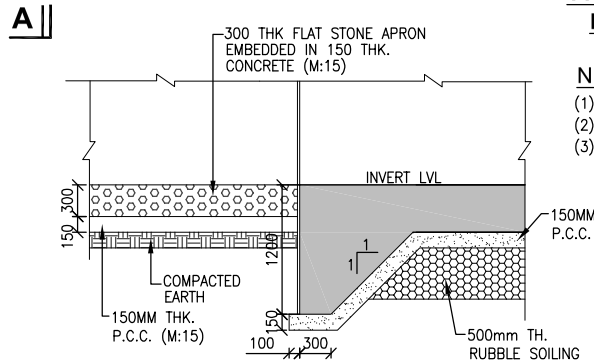

DETAIL AT "A"
1:50

NOTES:-
(1) ALL DIMENSIONS ARE IN MILLIMETER.
(2) DO NOT SCALE THIS DRAWING.
(3) THIS DRAWING MUST BE READ IN CONJUNCTION WITH ALL OTHER RELEVANT DRAWINGS.

Sr. No.	Design Chainage	No. x w x H	Length	a	b	c	d	e	FINISHED ROAD LEVELS At Center	At LHS	At RHS	LEVELS Foundation Lvl.	PCC Bottom	Top of Bott. Slab	Bot of Top Slab. @ center	Top of Top Slab@ Center	Top of Top Slab @ LHS	Top of Top Slab @ RHS
C4	28+077	1x3mx3m	24	3.000	3.000	0.300	0.300	0.350	352.543	352.243	352.243	348.818	348.668	349.168	352.168	352.468	352.168	352.168

REV.	DATE	REVISIONS

CLIENT:
NATIONAL HIGHWAYS & INFRASTRUCTURE DEVELOPMENT CORPORATION LTD.
PTI BUILDING, 4 PARLIAMENT STREET
SANSAD MARG AREA, NEW DELHI - 110001

DESIGN CONSULTANT:
ANANDJIWALA INFRA ADVISORY
9, Shivranjani Shopping Center, On 132 Feet Ring Road
Nr. Shivranjani Cross Road, Satellite, Ahmedabad - 380 015
Email: anandjiwalainfra@gmail.com

PROJECT:
CONSULTANCY SERVICES FOR FEASIBILITY STUDY, PREPARATION OF DETAILED PROJECT REPORT AND PROVIDING PRE-CONSTRUCTION SERVICES FOR UPGRADATION OF EXISTING 2 LANE HIGHWAY TO 4 LANE WITH PAVED SHOULDER CONFIGURATION (NH-144A) FROM KM 26.350 (KHATI CHOWK) TO KM 30.097 (HANUMAN CHOWK) OF JAMMU - AKHNOOR SECTION IN THE UNION TERRITORY OF JAMMU & KASHMIR ON EPC BASIS

SCALE AT A3 SIZE DRAWING

TITLE:
GAD OF SINGLE CELL BOX CULVERT 3.0x3.0 m WITHOUT CUSHION AT CH: 28+077

CLIENT APPROVAL: | SIGNATURE:

DWG NO:-

DRAWN:	CHECKED:	DESIGNED:	APPROVED:
LK	SJ	SC	LA

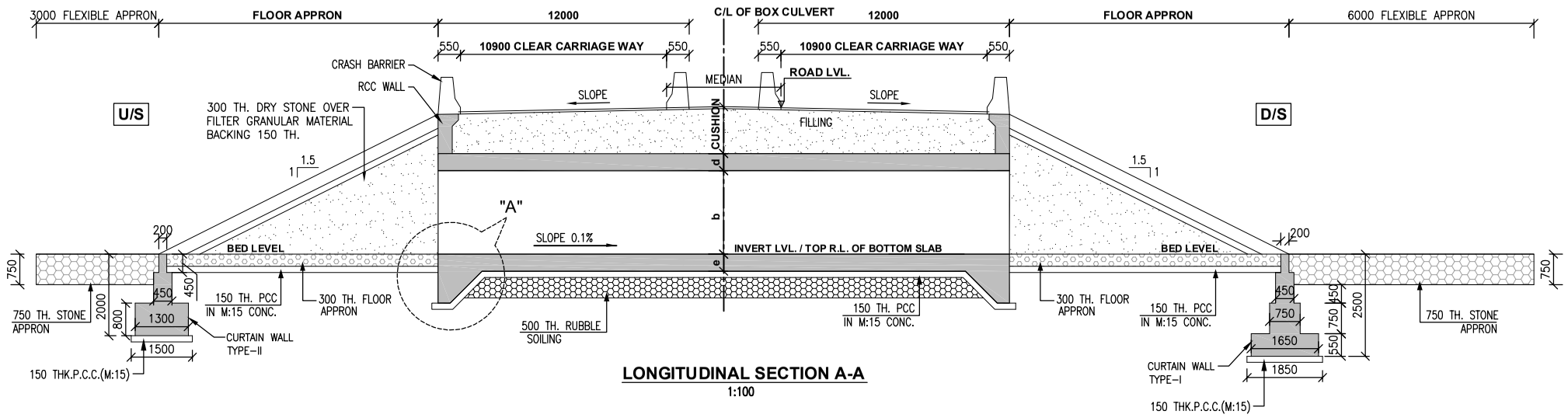

LONGITUDINAL SECTION A-A
1:100

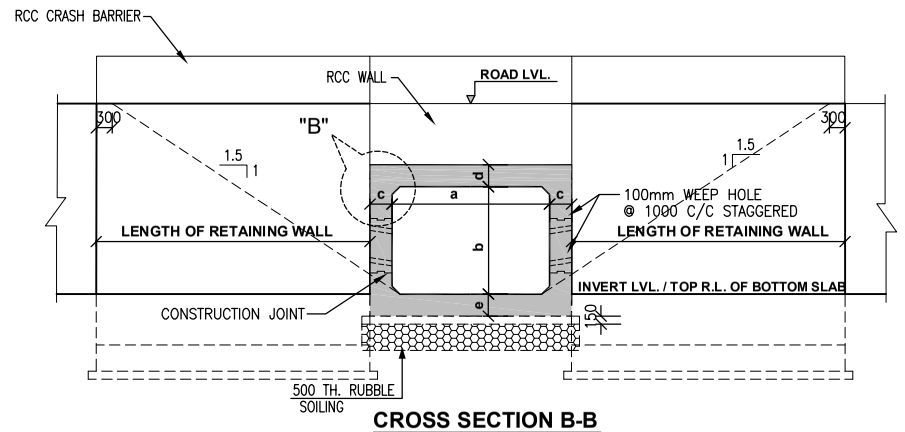

CROSS SECTION B-B
1:100

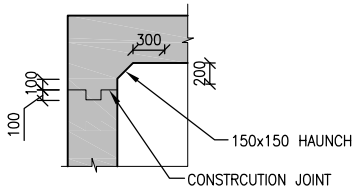

DETAILS AT "B"
1:50

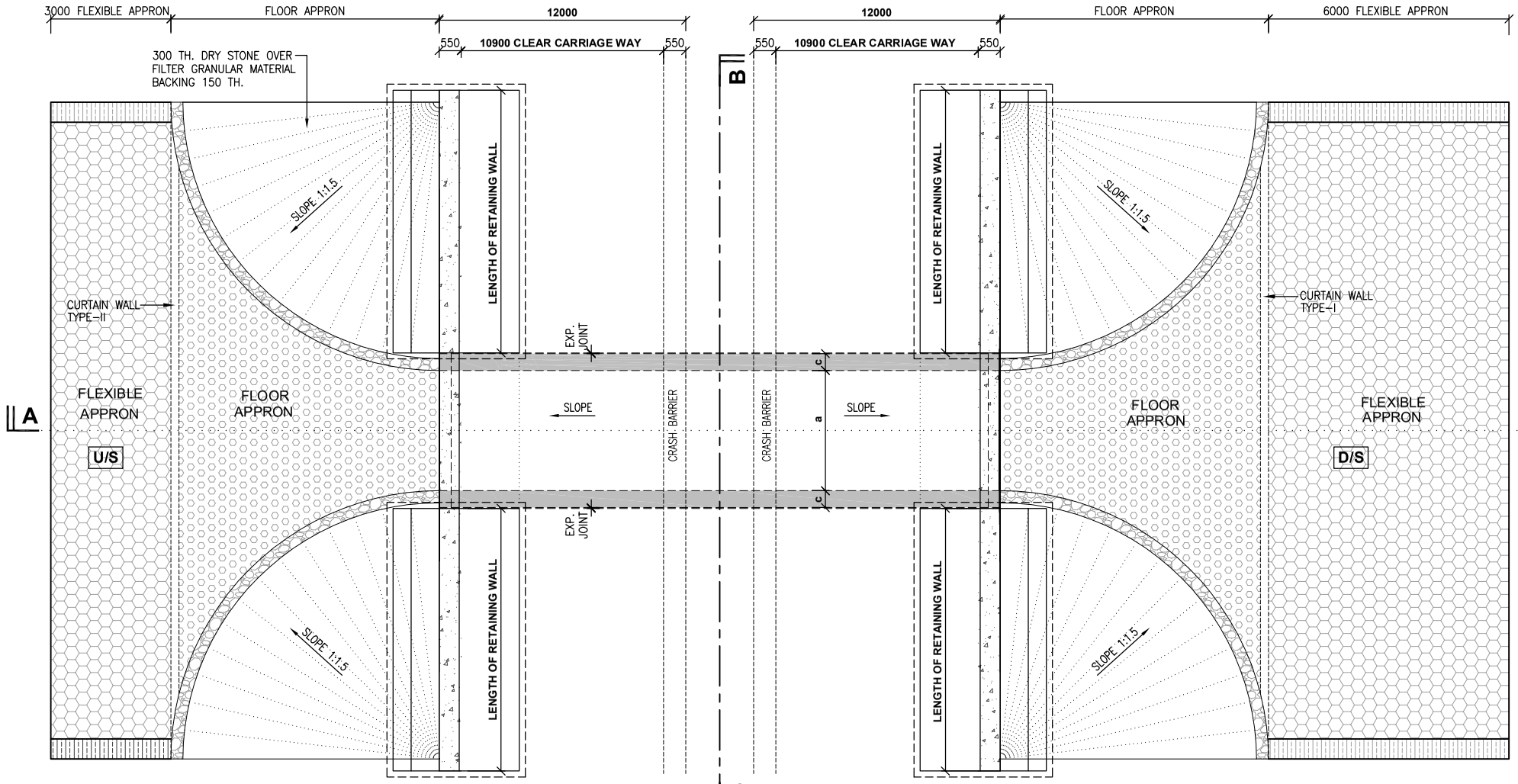

PLAN
1:100

ELEMENTS	CONCRETE GRADE
(a) BOX CELL STRUCTURE	M:40
(b) RCC RETAINING WALL	M:40
(c) PCC CURTAIN & TOE WALL	M:20
(d) LEVELLING COURSE (P.C.C.)	M:15
(e) RCC CRASH BARRIER	M:40
(f) RCC WALL	M:40

NOTES:-

(1) ALL DIMENSIONS ARE IN MILLIMETER.
(2) DO NOT SCALE THIS DRAWING.
(3) THIS DRAWING MUST BE READ IN CONJUNCTION WITH ALL OTHER RELEVANT DRAWINGS.

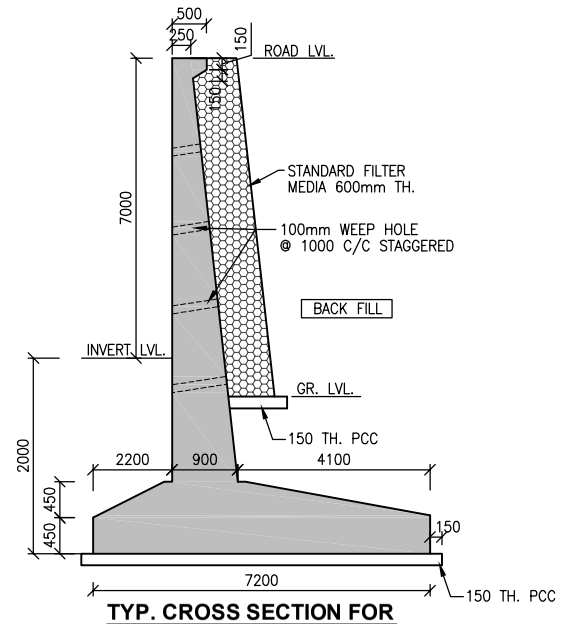

TYP. CROSS SECTION FOR RCC RETAINING WALL

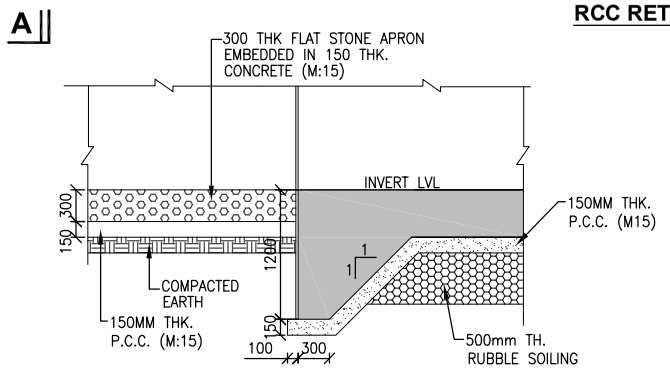

DETAIL AT "A"
1:50

Sr. No.	Design Chainage	No. x w x H	Length	a	b	c	d	e	FINISHED ROAD LEVELS At Center	At LHS	At RHS	LEVELS Foundation Lvl.	PCC Bottom	Top of Bott. Slab	Bot of Top Slab. @ center	Top of Top Slab@ Center	Top of Top Slab @ LHS	Top of Top Slab @ RHS	EARTH CUSHION
C5	28+362	1x6mx3.5m	24	6.000	3.500	0.500	0.500	0.550	353.267	352.967	352.967	345.717	345.567	346.267	349.767	350.267	350.267	350.267	3.000m

REV.	DATE	REVISIONS

CLIENT:
NATIONAL HIGHWAYS & INFRASTRUCTURE DEVELOPMENT CORPORATION LTD.
PTI BUILDING, 4 PARLIAMENT STREET
SANSAD MARG AREA, NEW DELHI - 110001

DESIGN CONSULTANT:
ANANDJIWALA INFRA ADVISORY
9, Shivranjani Shopping Center, On 132 Feet Ring Road
Nr. Shivranjani Cross Road, Satellite, Ahmedabad - 380 015
Email: anandjiwalainfra@gmail.com

PROJECT:
CONSULTANCY SERVICES FOR FEASIBILITY STUDY, PREPARATION OF DETAILED PROJECT REPORT AND PROVIDING PRE-CONSTRUCTION SERVICES FOR UPGRADATION OF EXISTING 2 LANE HIGHWAY TO 4 LANE WITH PAVED SHOULDER CONFIGURATION (NH-144A) FROM KM 26.350 (KHATI CHOWK) TO KM 30.097 (HANUMAN CHOWK) OF JAMMU - AKHNOOR SECTION IN THE UNION TERRITORY OF JAMMU & KASHMIR ON EPC BASIS

SCALE AT A3 SIZE DRAWING
20 0 20 40 60 80 100
2 0 2 4 6 8 10

TITLE:
GAD OF SINGLE CELL BOX CULVERT 6.0x3.5 m WITH CUSHION AT CH: 28+362

CLIENT APPROVAL: | SIGNATURE:

DWG NO:-

DRAWN:	CHECKED:	DESIGNED:	APPROVED:
LK	SJ	SC	LA

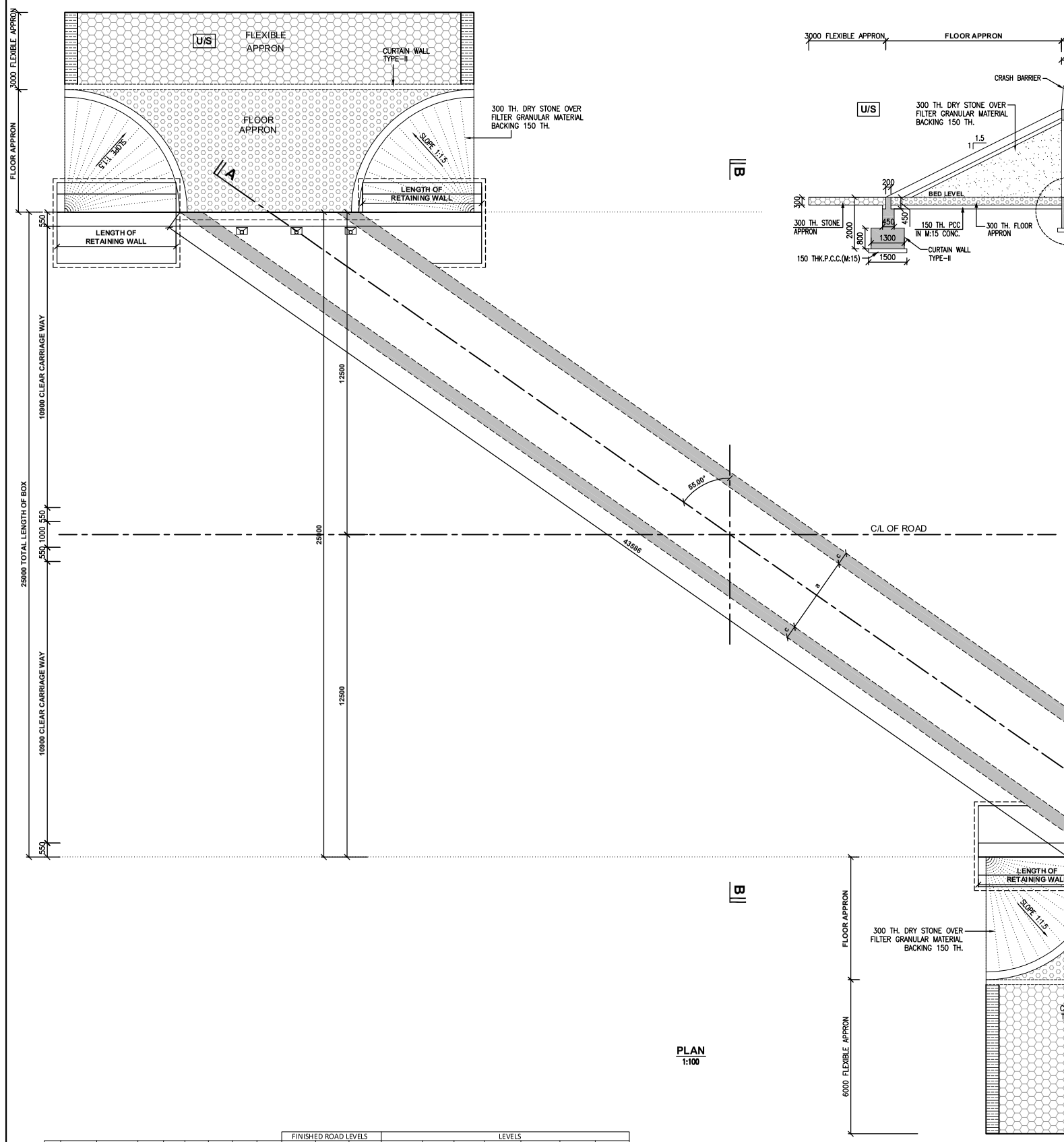

PLAN
1:100

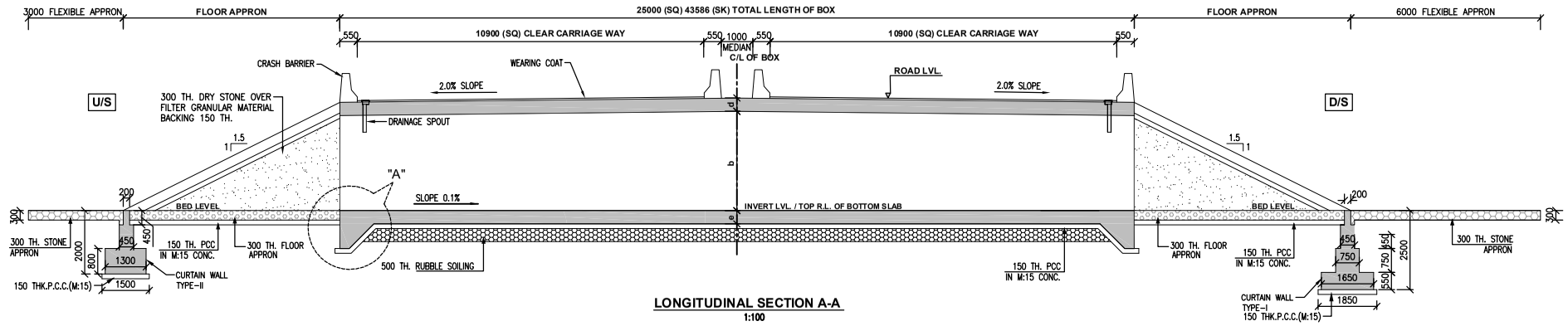

LONGITUDINAL SECTION A-A
1:100

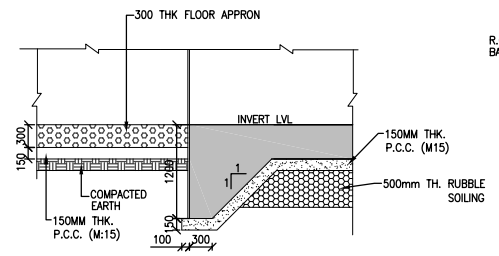

DETAIL AT "A"
1:50

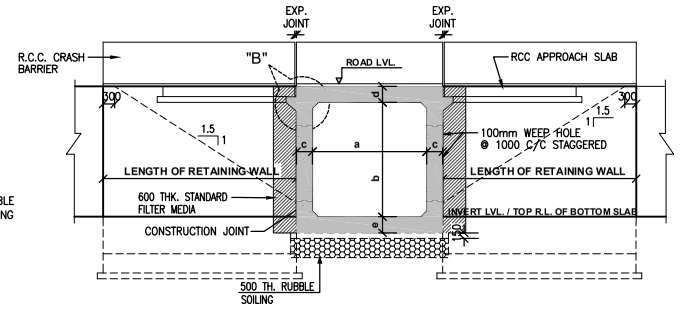

CROSS SECTION B-B
1:100

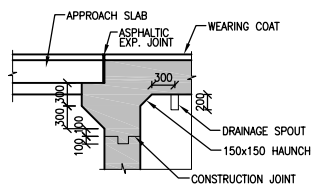

DETAILS AT "B"
1:50

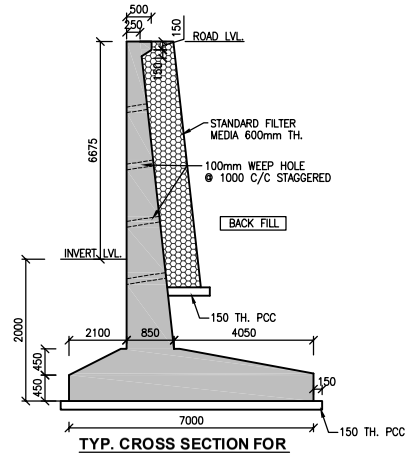

TYP. CROSS SECTION FOR RCC RETAINING WALL

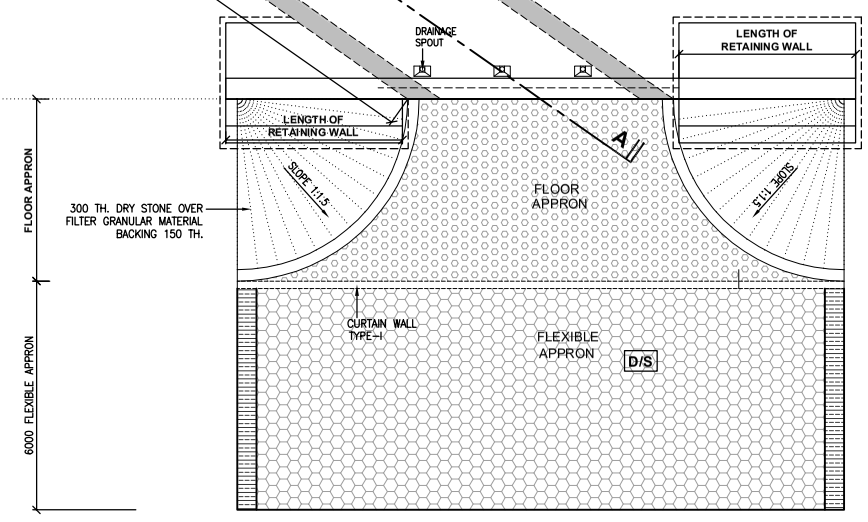

ELEMENTS	CONCRETE GRADE
(a) BOX CELL STRUCTURE	M:40
(b) RCC RETAINING WALL	M:40
(c) PCC CURTAIN & TOE WALL	M:20
(d) LEVELLING COURSE (P.C.C.)	M:15
(e) RCC CRASH BARRIER	M:40
(f) RCC APPROACH SLAB	M:30

NOTES:-
(1) ALL DIMENSIONS ARE IN MILLIMETER.
(2) DO NOT SCALE THIS DRAWING.
(3) THIS DRAWING MUST BE READ IN CONJUNCTION WITH ALL OTHER RELEVANT DRAWINGS.

			FINISHED ROAD LEVELS			LEVELS							
Sr. No.	Design Chainage	No. x w x H	Length	a	b	c	d	e	At Center	At LHS	At RHS	Foundation Lvl.	PCC Bottom	Top of Bott. Slab	Bot of Top Slab. @ center	Top of Top Slab@ Center	Top of Top Slab @ LHS	Top of Top Slab @ RHS
C6	28+586	1x6mx6m	24	6.000	6.000	0.700	0.700	0.750	356.257	355.957	355.957	348.732	348.582	349.482	355.482	356.182	355.882	355.882

REV.	DATE	REVISIONS

CLIENT:
NATIONAL HIGHWAYS & INFRASTRUCTURE DEVELOPMENT CORPORATION LTD.
PTI BUILDING, 4 PARLIAMENT STREET
SANSAD MARG AREA, NEW DELHI - 110001

DESIGN CONSULTANT:
ANANDJIWALA INFRA ADVISORY
9, Shivranjani Shopping Center, On 132 Feet Ring Road
Nr. Shivranjani Cross Road, Satellite, Ahmedabad - 380 015
Email: anandjiwalainfra@gmail.com

PROJECT:
CONSULTANCY SERVICES FOR FEASIBILITY STUDY, PREPARATION OF DETAILED PROJECT REPORT AND PROVIDING PRE-CONSTRUCTION SERVICES FOR UPGRADATION OF EXISTING 2 LANE HIGHWAY TO 4 LANE WITH PAVED SHOULDER CONFIGURATION (NH-144A) FROM KM 26.350 (KHATI CHOWK) TO KM 30.097 (HANUMAN CHOWK) OF JAMMU - AKHNOOR SECTION IN THE UNION TERRITORY OF JAMMU & KASHMIR ON EPC BASIS

SCALE AT A3 SIZE DRAWING
20 0 20 40 60 80 100
2 0 2 4 6 8 10

TITLE:
GAD OF SINGLE CELL BOX CULVERT 6.00m x6.00m WITHOUT CUSHION AT CH: 28+586

CLIENT APPROVAL:	SIGNATURE:

DWG NO:-

DRAWN:	CHECKED:	DESIGNED:	APPROVED:
LK	SJ	SC	LA

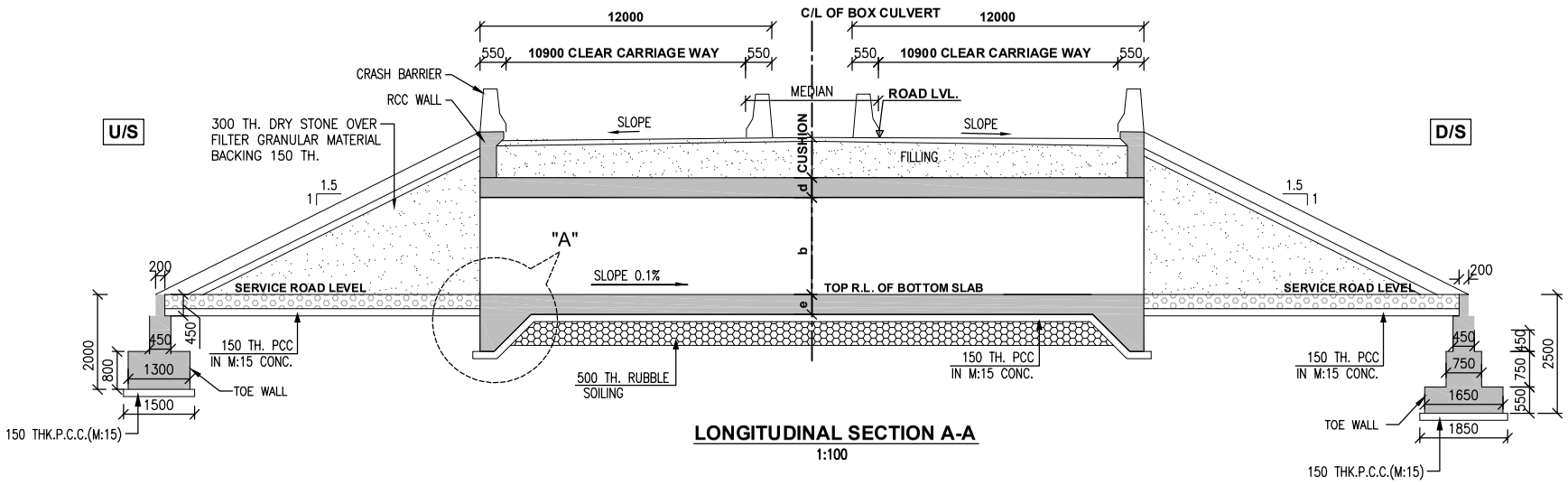

LONGITUDINAL SECTION A-A
1:100

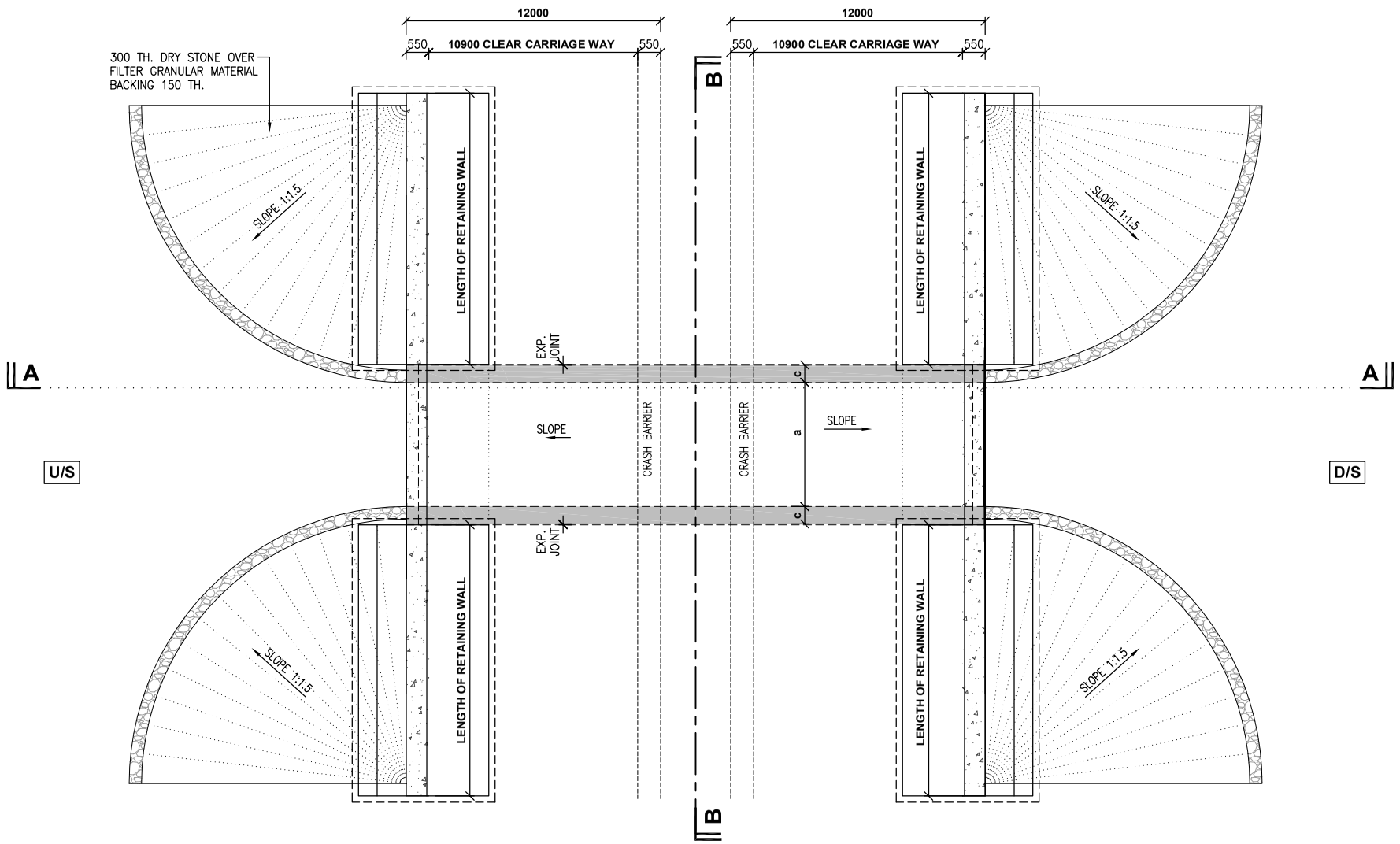

PLAN
1:100

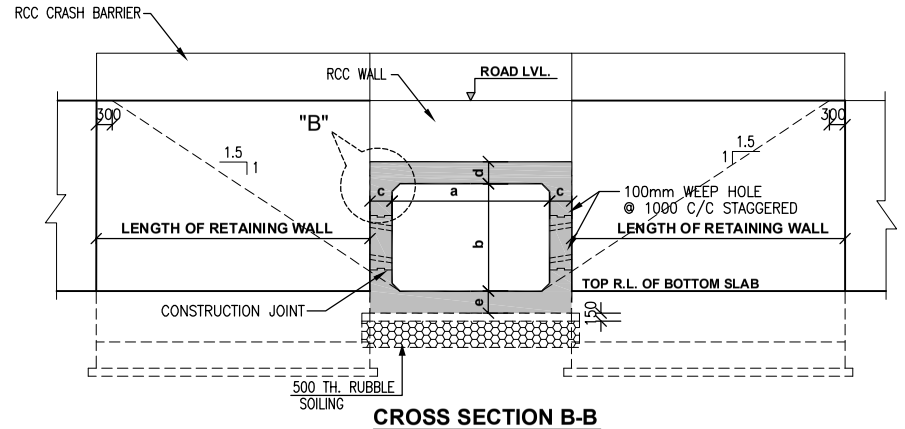

CROSS SECTION B-B
1:100

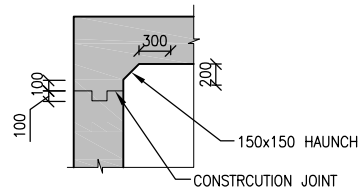

DETAILS AT "B"
1:50

ELEMENTS	CONCRETE GRADE
(a) BOX CELL STRUCTURE	M:40
(b) RCC RETAINING WALL	M:40
(c) PCC CURTAIN & TOE WALL	M:20
(d) LEVELLING COURSE (P.C.C.)	M:15
(e) RCC CRASH BARRIER	M:40
(f) RCC WALL	M:40

NOTES:-

(1) ALL DIMENSIONS ARE IN MILLIMETER.
(2) DO NOT SCALE THIS DRAWING.
(3) THIS DRAWING MUST BE READ IN CONJUNCTION WITH ALL OTHER RELEVANT DRAWINGS.

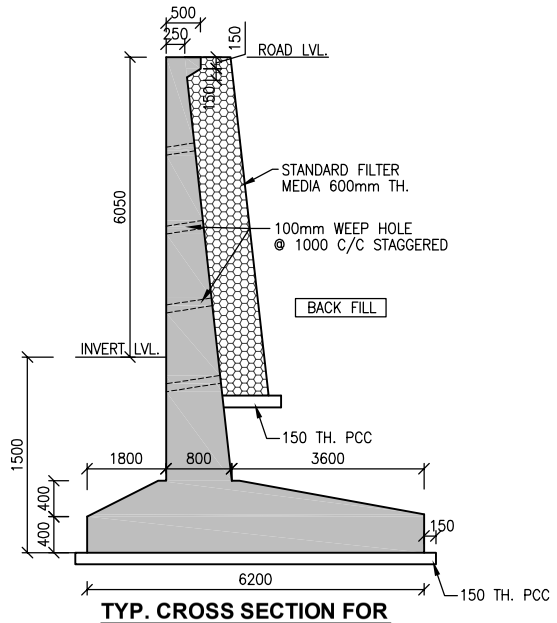

TYP. CROSS SECTION FOR RCC RETAINING WALL

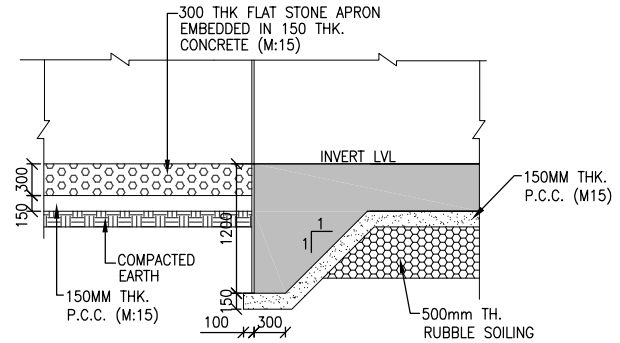

DETAIL AT "A"
1:50

Sr. No.	Design Chainage	No. x w x H	Length	a	b	c	d	e	FINISHED ROAD LEVELS At Center	At LHS	At RHS	LEVELS Foundation Lvl.	PCC Bottom	Top of Bott. Slab	Bot of Top Slab. @ center	Top of Top Slab@ Center	Top of Top Slab @ LHS	Top of Top Slab @ RHS	EARTH CUSHION
C7	28+680	1x10.0mx4.5m	24	10.00	4.500	0.550	0.550	0.600	355.879	355.579	355.579	349.229	349.079	349.829	354.329	354.879	354.879	354.879	1.000m

REV.	DATE	REVISIONS

CLIENT:
NATIONAL HIGHWAYS & INFRASTRUCTURE DEVELOPMENT CORPORATION LTD.
PTI BUILDING, 4 PARLIAMENT STREET
SANSAD MARG AREA, NEW DELHI - 110001

DESIGN CONSULTANT:
ANANDJIWALA INFRA ADVISORY
9, Shivranjani Shopping Center, On 132 Feet Ring Road
Nr. Shivranjani Cross Road, Satellite, Ahmedabad - 380 015
Email: anandjiwalainfra@gmail.com

PROJECT:
CONSULTANCY SERVICES FOR FEASIBILITY STUDY, PREPARATION OF DETAILED PROJECT REPORT AND PROVIDING PRE-CONSTRUCTION SERVICES FOR UPGRADATION OF EXISTING 2 LANE HIGHWAY TO 4 LANE WITH PAVED SHOULDER CONFIGURATION (NH-144A) FROM KM 26.350 (KHATI CHOWK) TO KM 30.097 (HANUMAN CHOWK) OF JAMMU - AKHNOOR SECTION IN THE UNION TERRITORY OF JAMMU & KASHMIR ON EPC BASIS

SCALE AT A3 SIZE DRAWING
20 0 20 40 60 80 100
2 0 2 4 6 8 10

TITLE:
GAD OF LVUP 1x10.0x4.50m WITH CUSHION AT CH: 28+680

CLIENT APPROVAL: | SIGNATURE:

DWG NO:-

DRAWN:	CHECKED:	DESIGNED:	APPROVED:
LK	SJ	SC	LA

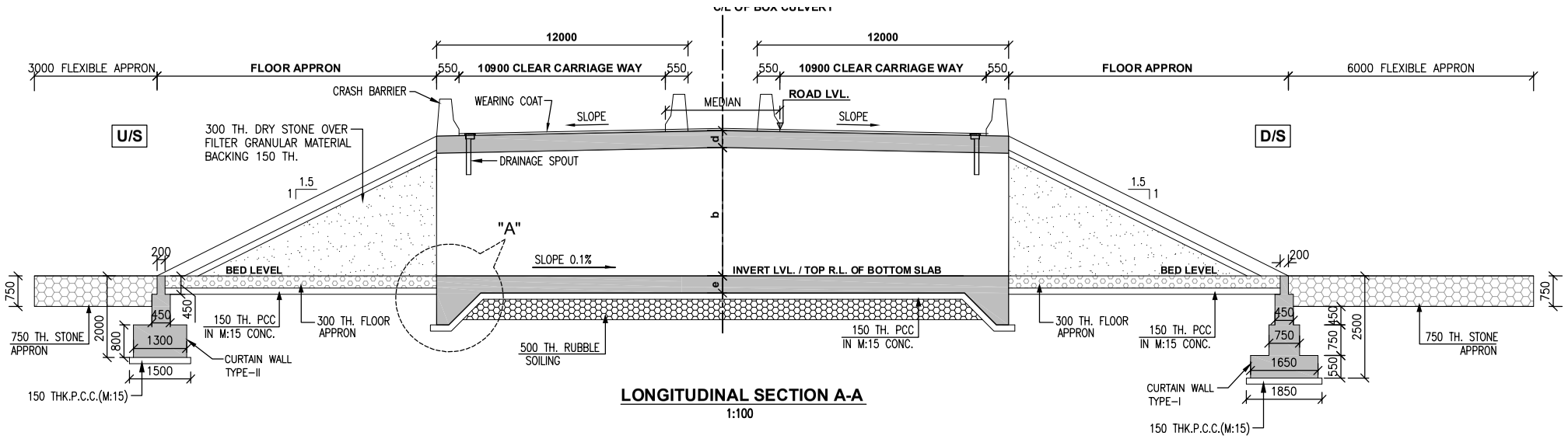

LONGITUDINAL SECTION A-A
1:100

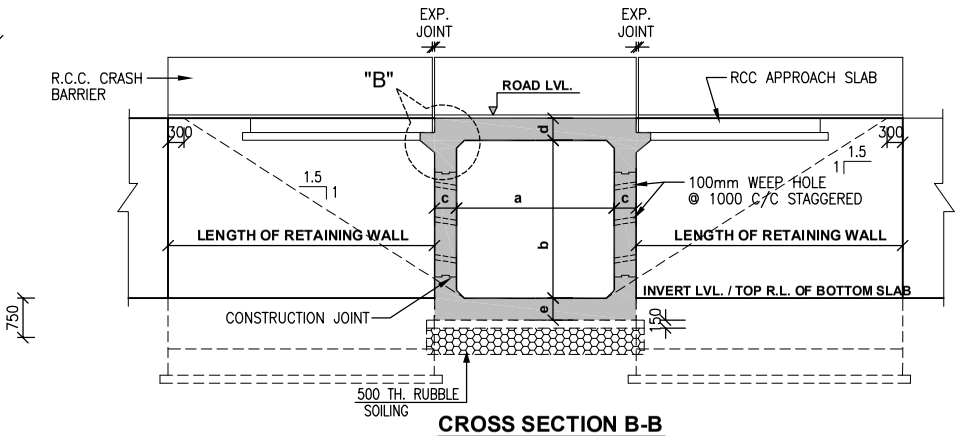

CROSS SECTION B-B
1:100

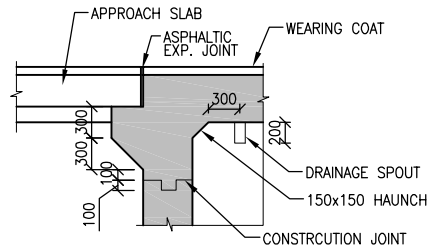

DETAILS AT "B"
1:50

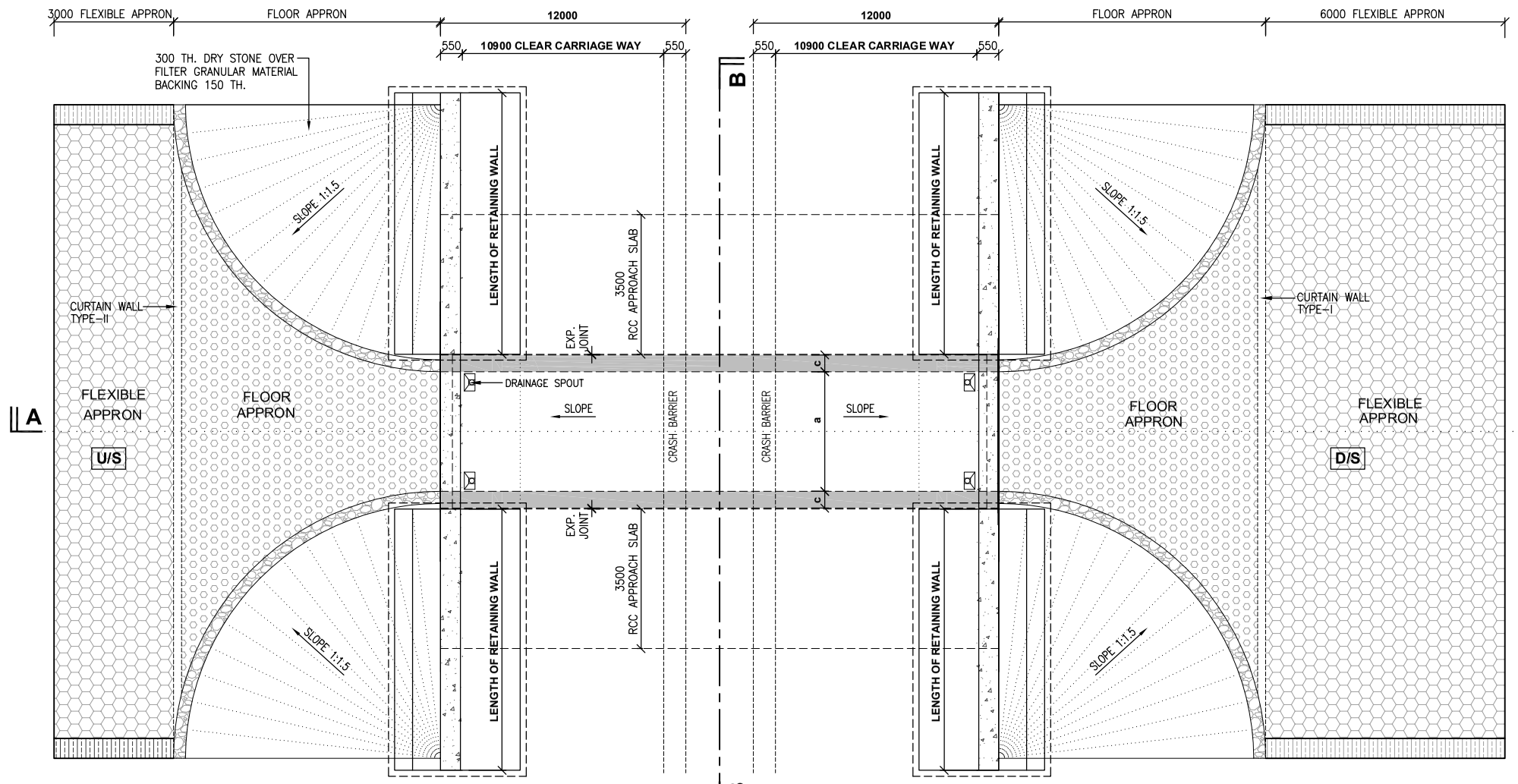

PLAN
1:100

ELEMENTS	CONCRETE GRADE
(a) BOX CELL STRUCTURE	M:40
(b) RCC RETAINING WALL	M:40
(c) PCC CURTAIN & TOE WALL	M:20
(d) LEVELLING COURSE (P.C.C.)	M:15
(e) RCC CRASH BARRIER	M:40
(f) RCC APPROACH SLAB	M:30

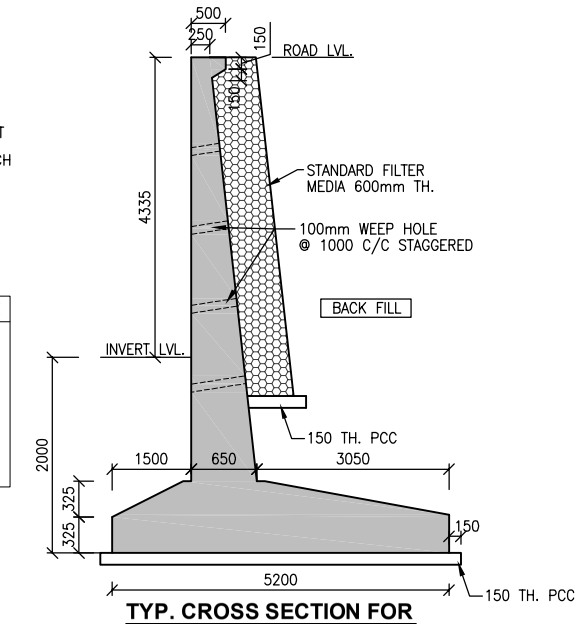

TYP. CROSS SECTION FOR RCC RETAINING WALL

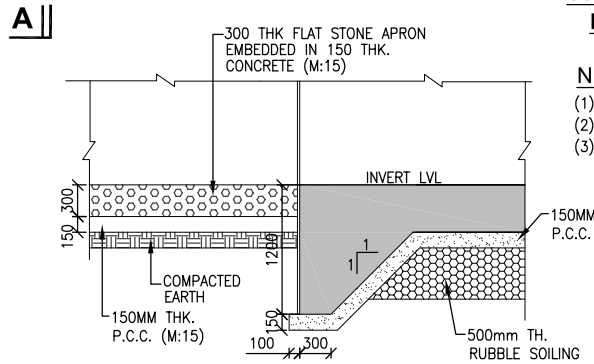

DETAIL AT "A"
1:50

NOTES:-
(1) ALL DIMENSIONS ARE IN MILLIMETER.
(2) DO NOT SCALE THIS DRAWING.
(3) THIS DRAWING MUST BE READ IN CONJUNCTION WITH ALL OTHER RELEVANT DRAWINGS.

			FINISHED ROAD LEVELS			LEVELS						
Sr. No.	Design Chainage	No. x w x H	Length	a	b	c	d	e	At Center	At LHS	At RHS	Foundation Lvl.	PCC Bottom	Top of Bott. Slab	Bot of Top Slab. @ center	Top of Top Slab@ Center	Top of Top Slab @ LHS	Top of Top Slab @ RHS
C8	29+025	1x6.0mx4.0m	24	6.000	4.000	0.500	0.500	0.550	353.000	352.700	352.700	347.875	347.725	348.425	352.425	352.925	352.625	352.625

REV.	DATE	REVISIONS

CLIENT:
NATIONAL HIGHWAYS & INFRASTRUCTURE DEVELOPMENT CORPORATION LTD.
PTI BUILDING, 4 PARLIAMENT STREET
SANSAD MARG AREA, NEW DELHI - 110001

DESIGN CONSULTANT:
ANANDJIWALA INFRA ADVISORY
9, Shivranjani Shopping Center, On 132 Feet Ring Road
Nr. Shivranjani Cross Road, Satellite, Ahmedabad - 380 015
Email: anandjiwalainfra@gmail.com

PROJECT:
CONSULTANCY SERVICES FOR FEASIBILITY STUDY, PREPARATION OF DETAILED PROJECT REPORT AND PROVIDING PRE-CONSTRUCTION SERVICES FOR UPGRADATION OF EXISTING 2 LANE HIGHWAY TO 4 LANE WITH PAVED SHOULDER CONFIGURATION (NH-144A) FROM KM 26.350 (KHATI CHOWK) TO KM 30.097 (HANUMAN CHOWK) OF JAMMU - AKHNOOR SECTION IN THE UNION TERRITORY OF JAMMU & KASHMIR ON EPC BASIS

SCALE AT A3 SIZE DRAWING

TITLE:
GAD OF SINGLE CELL BOX CULVERT 6.0x4.0m WITHOUT CUSHION AT CH: 29+025

CLIENT APPROVAL: | SIGNATURE:

DWG NO:-

DRAWN:	CHECKED:	DESIGNED:	APPROVED:
LK	SJ	SC	LA

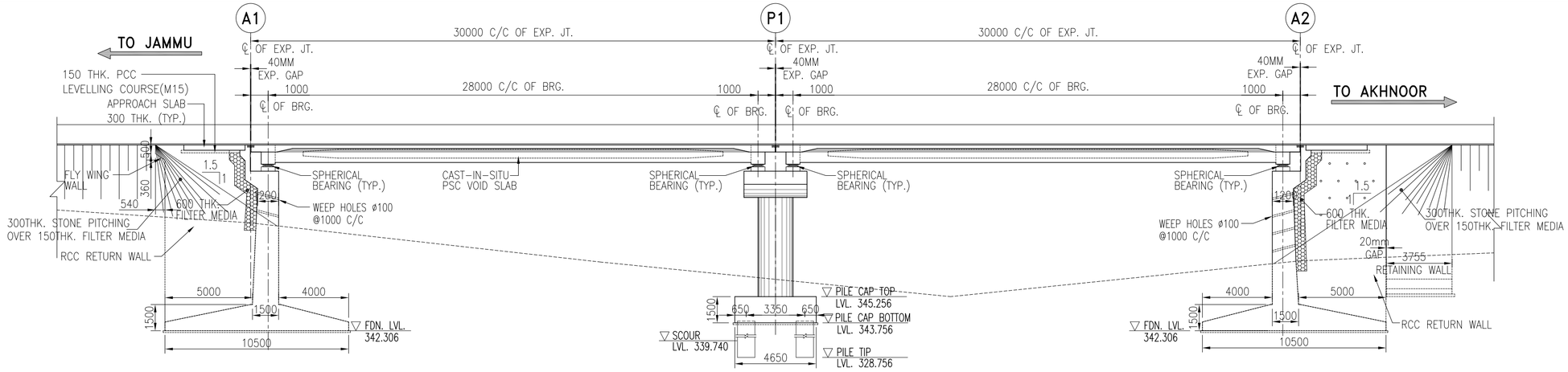

FRL	353.000	353.000	353.000	353.000	353.000
GROUND LVL.	348.476	346.236	345.246	344.256	346.306
CHAINAGE	29+120.000	29+140.000	29+150.000	29+160.000	29+180.000

LONGITUDINAL ELEVATION

(SCALE:– 1:200)

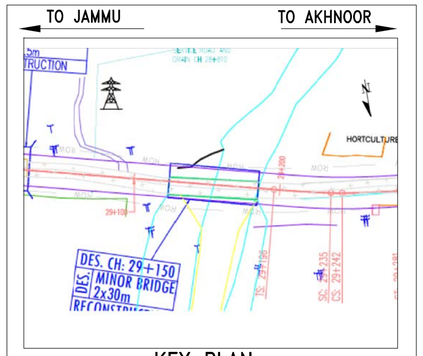

KEY PLAN

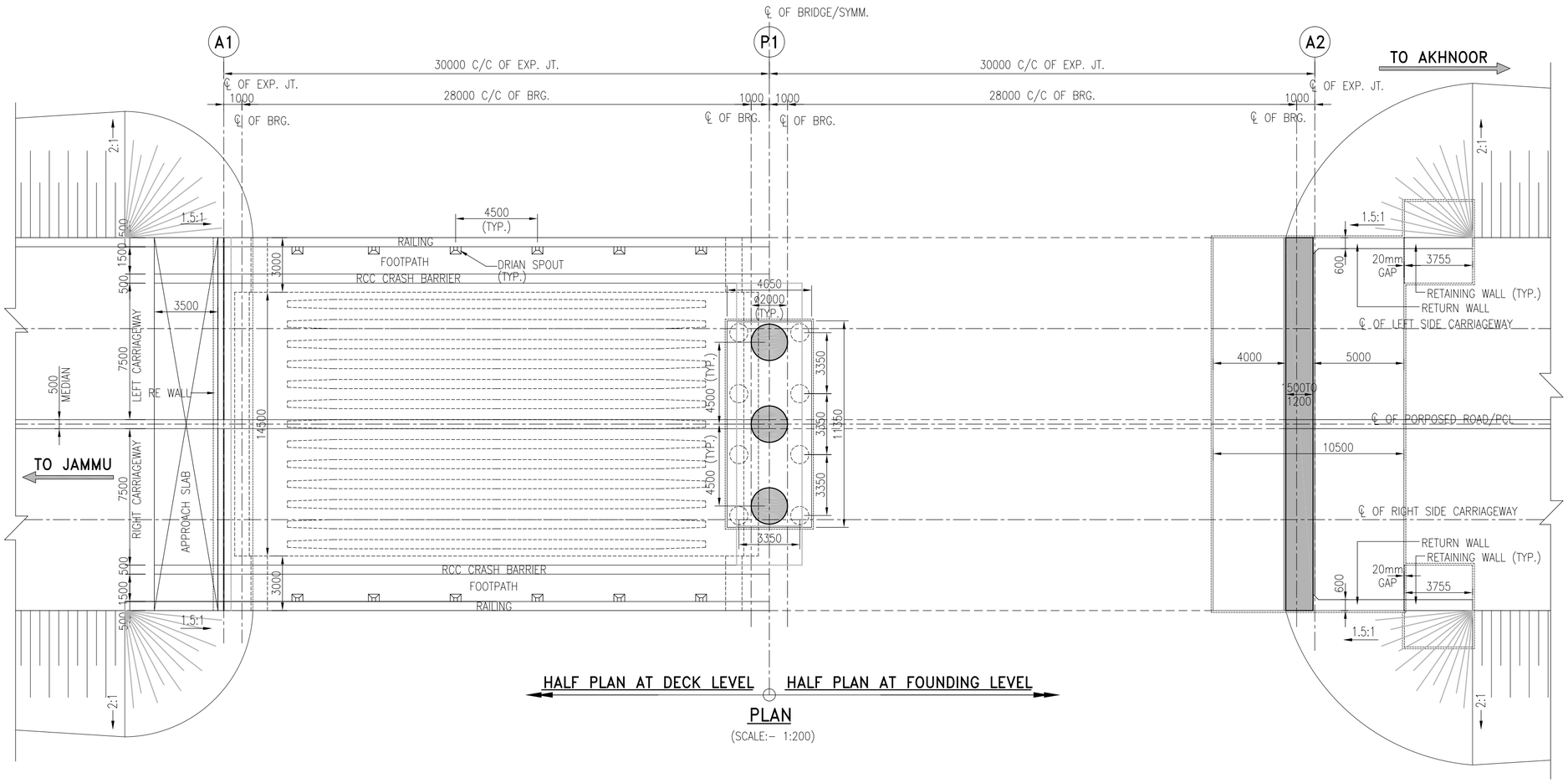

HALF PLAN AT DECK LEVEL — HALF PLAN AT FOUNDING LEVEL

PLAN

(SCALE:– 1:200)

REFERENCE DRAWINGS:

1. PSC VOID SLAB DIMEN. DETAILS :–NHIDCL/JA/STR/MNB/29+150/NU/401

NOTES:

1. ALL DIMENSIONS ARE IN mm. UNLESS OTHERWISE MENTIONED. ONLY WRITTEN DIMENSIONS ARE TO BE FOLLOWED.NO DIMENSION IS TO BE SCALED.
2. THE BRIDGE HAS BEEN DESIGNED FOR 4–LANE (2+2 LANE) WITH 70RW + 70RW, 4–LANES OF IRC CLASS A LOADING OR SV LOADING + 70RW WHICHEVER IS GOVERNS.
3. ALL REINFORCEMENT SHALL BE GRADE TMT BARS OF DESIGNATION Fe500 CONFORMING TO IS:1786 STANDARD WITH A MINIMUM YIELD STRENGTH OF 500 N/sq.mm.
4. WEARING COAT SHALL BE 50MM THK. BITUMINOUS CONCRETE WITH 3MM ASPHALT TO SEAL.
5. BACK FILLING SHALL CONSIST OF SELECTED EARTH CONFORMING TO APPENDIX: 6 OF IRC:78–2014 HAVING PROPERTIES C=0, ø = 35° & γd = 20KN/Cum.
6. THE DIMENSIONS AND LEVELS SHOWN IN THIS DRAWING ARE TENTATIVE. FOR DETAILS REFER RESPECTIVE STRUCTURAL & HIGHWAY DETAILED DRAWINGS.
7. CONCRETE SHALL BE DESIGN MIX AND 28 DAYS CHARACTERISTIC STRENGTH FOR VARIOUS COMPONENTS SHALL BE AS UNDER :

CAST–IN–SITU PSC VOID SLAB	M 50
CONCEALED BEAM	M 50
CRASH BARRIER	M 40
ABUT./PIER CAP	M 35
ABUT./PIER SHAFT	M 35
PILE & PILE CAP	M 35
APPROCH SLAB	M 30
PCC LEVELLING COURSE	M 15

8. STRIP SEAL TYPE EXPANSION JOINTS OF PROVEN QUALITY SHALL BE PROVIDED AS PER IRC : SP:69–2005.
9. CLEAR COVER TO OUTERMOST STEEL SHALL BE 75mm FOR EARTHEN FACE & 50MM FOR INNERFACE.
10. FOR DETAILS OF CRASH BARRIER, DRAINAGE SPOUT & APPROACH SLAB REFER MISCELLANEOUS DRAWINGS.
12. ASSUMED SBC OF SOIL AT ABUTMENT FOUNDING LEVEL IS 30.0t/m^2
13. THE SAFE LOAD CAPACITY OF PILE:
    VERTICAL CAPACITY FOR PIER = 400T
    LATERAL CAPACITY FOR PIER = 40T
14. HYDRAULIC DATA FOR DESIGN OF BRIDGE.
    DESIGN DISCHARGE – cumecs
    HFL – m
    MAX. VELOCITY – m/sec
15. THE BRIDGE LIES IN SEISMIC ZONE – IV

REV	DATE	DESCRIPTION	DESIGNED	DRAWN	CHECKED	APPROVED
R0	18.08.21	ISSUED FOR APPROVAL	BJS	MPT	GMS	GMS

CLIENT:
NATIONAL HIGHWAYS & INFRASTRUCTURE DEVELOPMENT CORPORATION LTD.
PTI BUILDING, 4 PARLIAMENT STREET SANSAD MARG AREA, NEW DELHI-110001

DESIGN CONSULTANTS :
ANANDJIWALA INFRA ADVISORY
9, SHIVRANJANI SHOPPING CENTER, ON 132 FEET RING ROAD, NR. SHIVRANJANI CRROSS ROAD, SATELLITE, AHMEDABAD-380015
Email: anandjiwalainfra@gmail.com

PROJECT :
CONSULTANCY SERVICES FOR FEASIBILITY STUDY, PREPARATION OF DETAILED PROJECT REPORT AND PROVIDING PRE-CONSTRUCTION SERVICES FOR UPGRADATION OF EXISTING 2-LANE HIGHWAY TO 4-LANE WITH PAVED SHOULDER CONFIGURATION (NH-144A) FROM KM 26.350 (KHATI CHOWK) TO KM 30.097 (HANUMAN CHOWK) OF JAMMU-AKHNOOR SECTION IN THE UNION TERRITORY OF JAMMU & KASHMIR ON EPC BASIS

DESIGNED	BJS	
DRAWN	MPT	
CHECKED	GMS	
APPROVED	GMS	
DATE 18.08.2021	SCALE: AS SHOWN	

TITLE : RECONSTRUCTION OF MINOR BRIDGE AT DESIGN CH:29+150.000 GENERAL ARRANGEMENT DRAWING FOR 2x30.0M SPAN

REV. R0
SIZE A2

DRAWING NO : NHIDCL/JA/STR/MNB/29+150/101

SHEET 01 OF 02

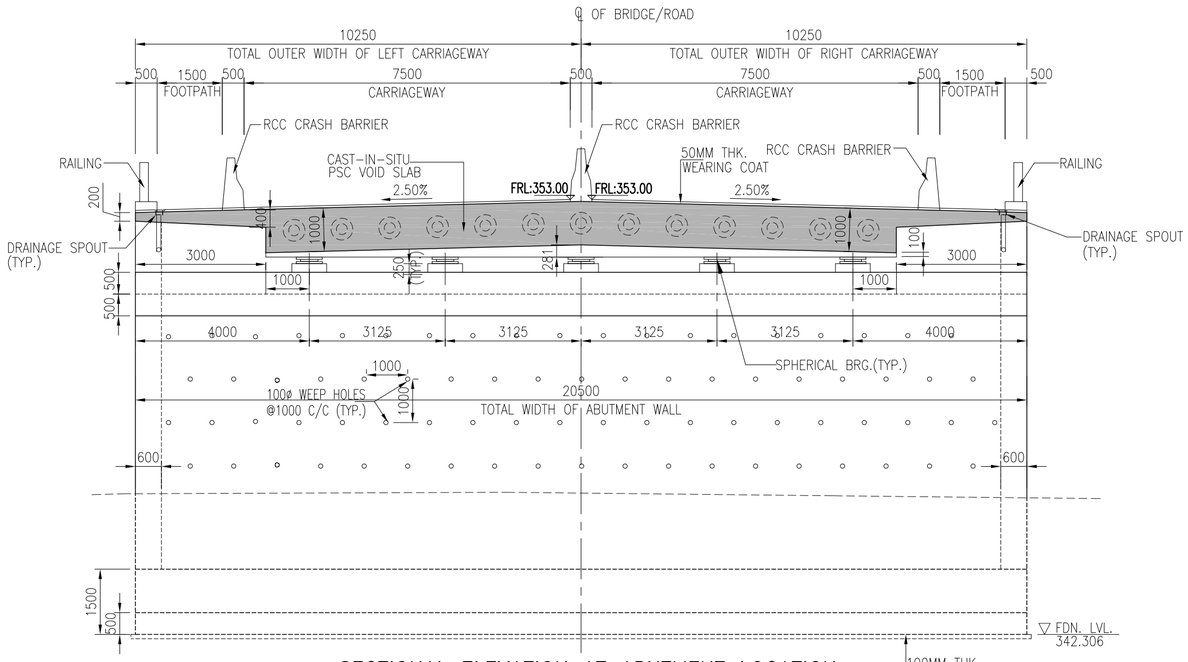

SECTIONAL ELEVATION AT ABUTMENT LOCATION

(SCALE:- 1:100)

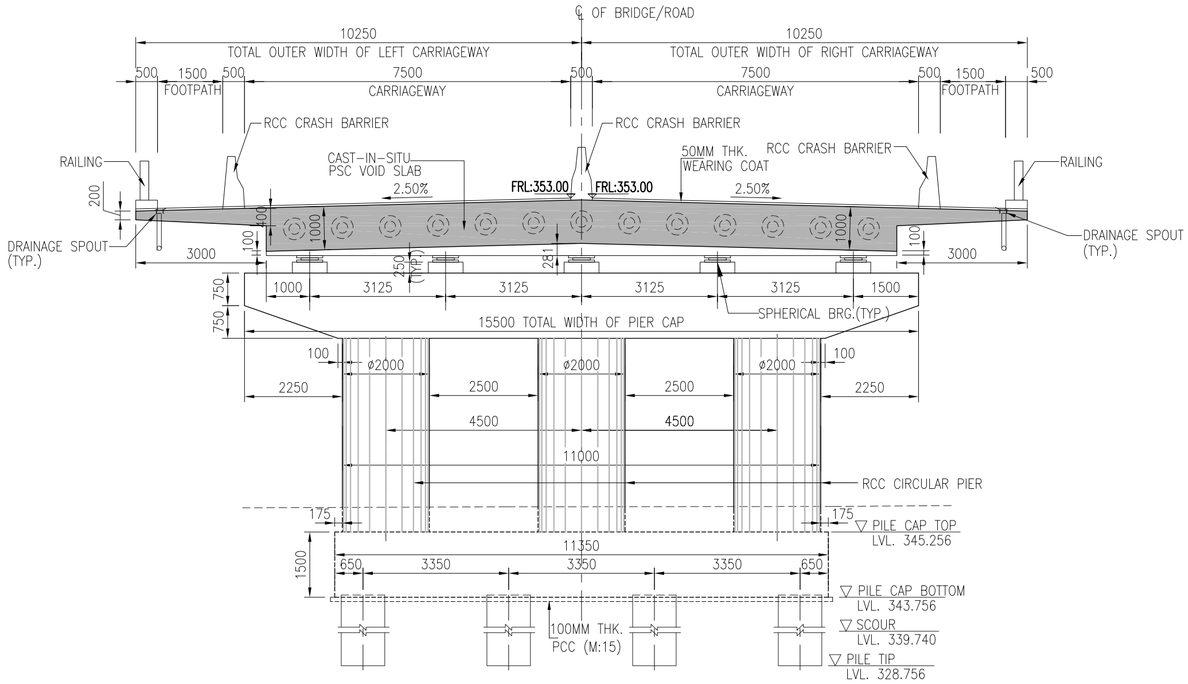

SECTIONAL ELEVATION AT PIER-P1 LOCATION

(SCALE:- 1:100)

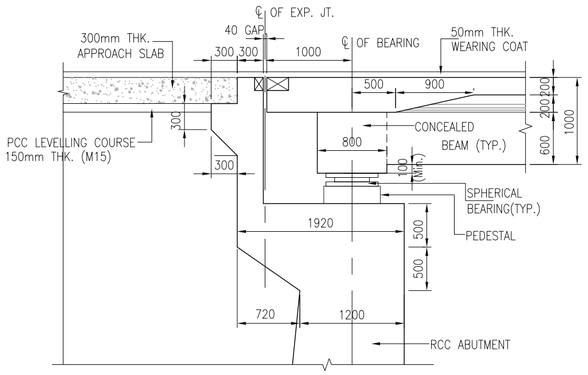

DETAILS AT ABUTMENT CAP

(SCALE 1:50)

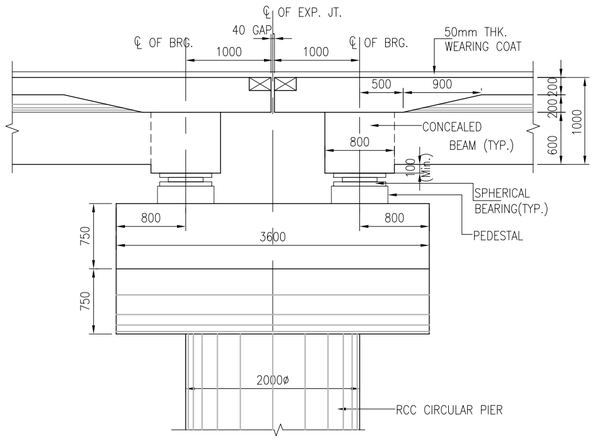

DETAILS AT ABUTMENT CAP

(SCALE 1:50)

REFERENCE DRAWINGS:

1. PSC VOID SLAB DIMEN. DETAILS :-NHIDCL/JA/STR/MNB/29+150/NU/401

NOTES:

1. ALL DIMENSIONS ARE IN mm. UNLESS OTHERWISE MENTIONED. ONLY WRITTEN DIMENSIONS ARE TO BE FOLLOWED.NO DIMENSION IS TO BE SCALED.
2. FOR ALL OTHER NOTES REFER SHEET 01 OF 02.

REV	DATE	DESCRIPTION	DESIGNED	DRAWN	CHECKED	APPROVED
R0	18.08.21	ISSUED FOR APPROVAL	BJS	MPT	GMS	GMS

CLIENT:

NATIONAL HIGHWAYS & INFRASTRUCTURE DEVELOPMENT CORPORATION LTD.

PTI BUILDING, 4 PARLIAMENT STREET
SANSAD MARG AREA, NEW DELHI-110001

DESIGN CONSULTANTS :

ANANDJIWALA INFRA ADVISORY

9, SHIVRANJANI SHOPPING CENTER, ON 132 FEET RING ROAD, NR. SHIVRANJANI CRROSS ROAD, SATELLITE, AHMEDABAD-380015
Email: anandjiwalainfra@gmail.com

PROJECT :

CONSULTANCY SERVICES FOR FEASIBILITY STUDY, PREPARATION OF DETAILED PROJECT REPORT AND PROVIDING PRE-CONSTRUCTION SERVICES FOR UPGRADATION OF EXISTING 2-LANE HIGHWAY TO 4-LANE WITH PAVED SHOULDER CONFIGURATION (NH-144A) FROM KM 26.350 (KHATI CHOWK) TO KM 30.097 (HANUMAN CHOWK) OF JAMMU-AKHNOOR SECTION IN THE UNION TERRITORY OF JAMMU & KASHMIR ON EPC BASIS

DESIGNED	BJS
DRAWN	MPT
CHECKED	GMS
APPROVED	GMS
DATE 18.08.2021	SCALE: AS SHOWN

TITLE : RECONSTRUCTION OF MINOR BRIDGE AT DESIGN CH:29+150.000 GENERAL ARRANGEMENT DRAWING FOR 2x30.0M SPAN

REV. R0

SIZE A2

DRAWING NO :

NHIDCL/JA/STR/MNB/29+150/101

SHEET 02 OF 02

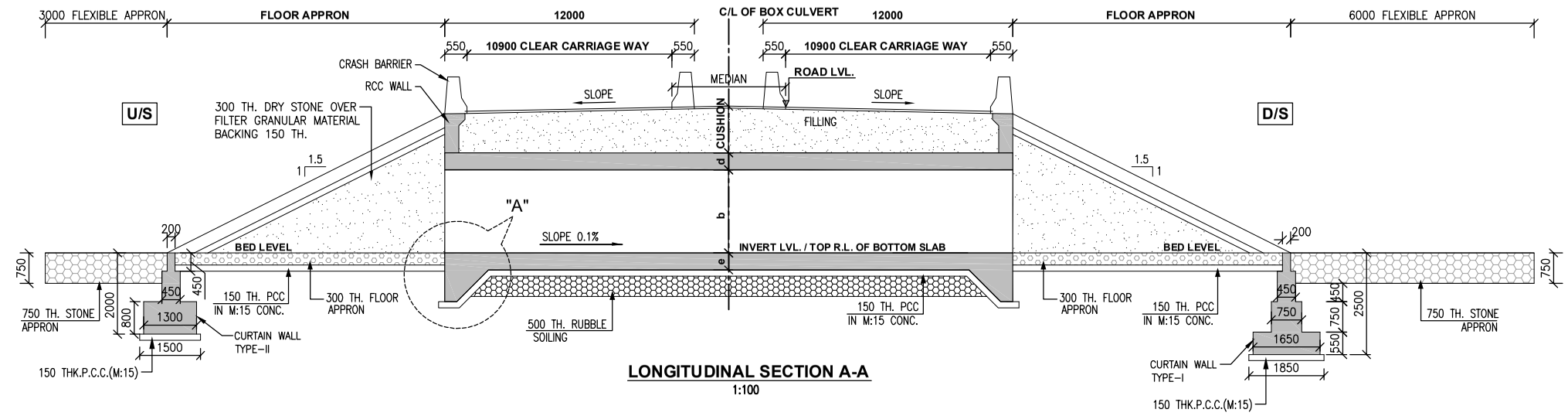

LONGITUDINAL SECTION A-A
1:100

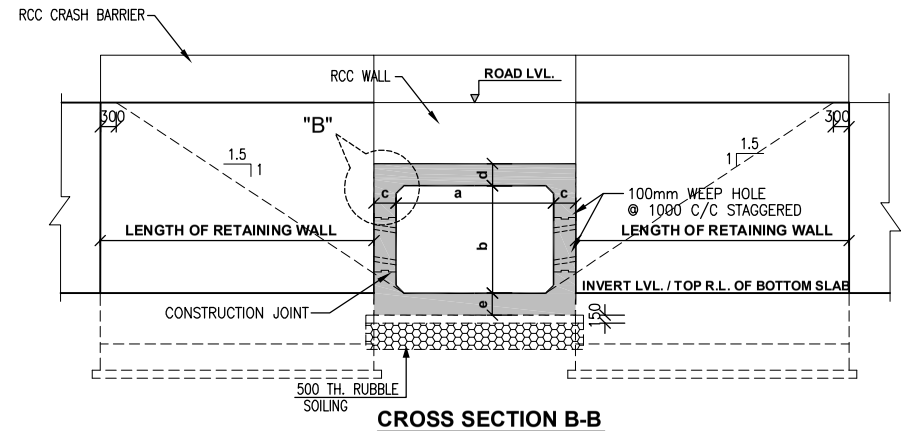

CROSS SECTION B-B
1:100

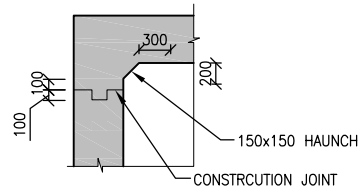

DETAILS AT "B"
1:50

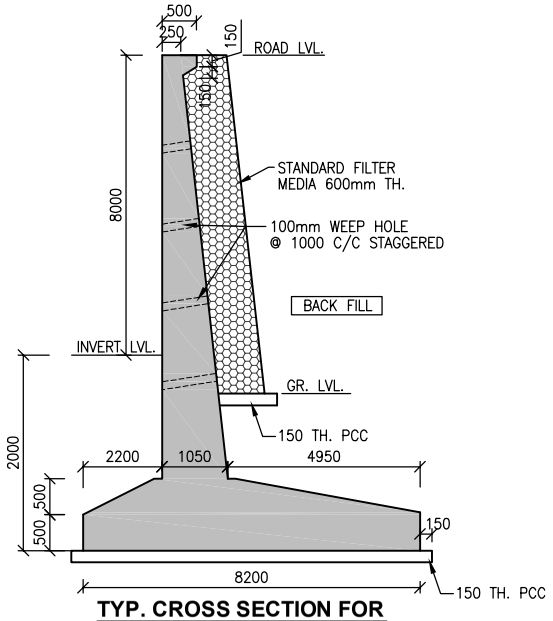

TYP. CROSS SECTION FOR RCC RETAINING WALL

ELEMENTS	CONCRETE GRADE
(a) BOX CELL STRUCTURE	M:40
(b) RCC RETAINING WALL	M:40
(c) PCC CURTAIN & TOE WALL	M:20
(d) LEVELLING COURSE (P.C.C.)	M:15
(e) RCC CRASH BARRIER	M:40
(f) RCC WALL	M:40

NOTES:-

(1) ALL DIMENSIONS ARE IN MILLIMETER.
(2) DO NOT SCALE THIS DRAWING.
(3) THIS DRAWING MUST BE READ IN CONJUNCTION WITH ALL OTHER RELEVANT DRAWINGS.

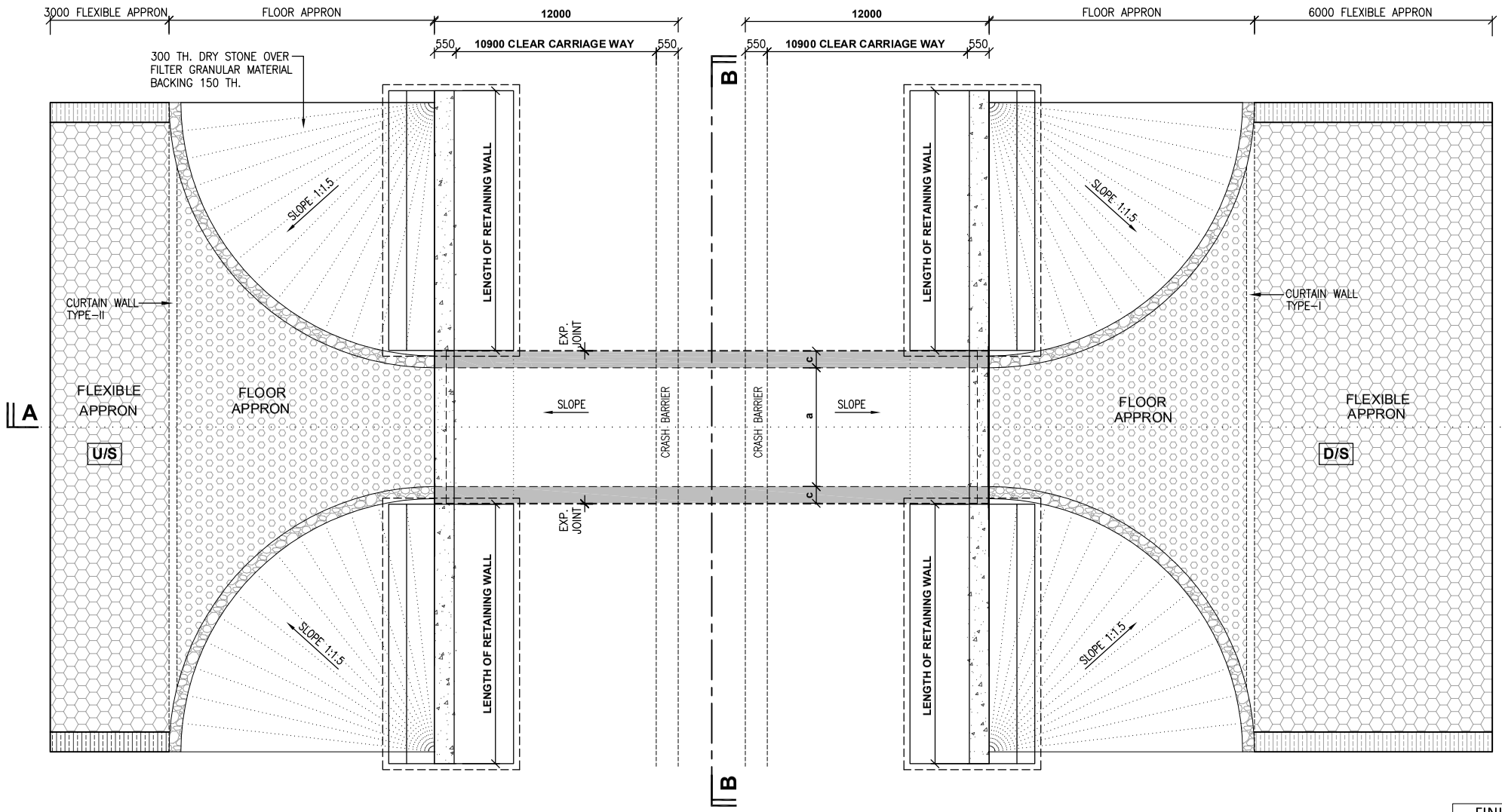

PLAN
1:100

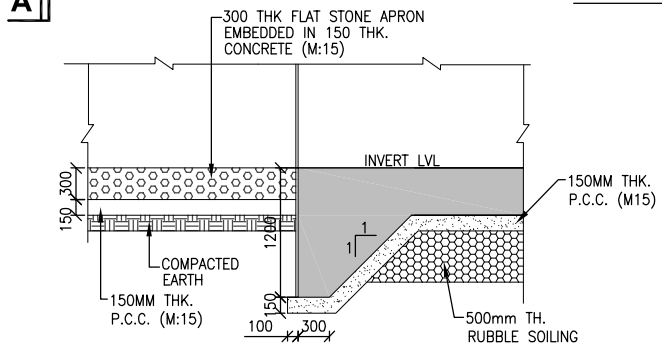

DETAIL AT "A"
1:50

Sr. No.	Design Chainage	No. x w x H	Length	a	b	c	d	e	FINISHED ROAD LEVELS At Center	At LHS	At RHS	LEVELS Foundation Lvl.	PCC Bottom	Top of Bott. Slab	Bot of Top Slab. @ center	Top of Top Slab@ Center	Top of Top Slab @ LHS	Top of Top Slab @ RHS	EARTH CUSHION
C9	29+327	1x6mx4.0m	24	6.000	4.000	0.500	0.500	0.550	357.406	357.106	357.106	348.856	348.706	349.406	353.406	353.906	353.906	353.906	3.500 m

REV.	DATE	REVISIONS

CLIENT:
NATIONAL HIGHWAYS & INFRASTRUCTURE DEVELOPMENT CORPORATION LTD.
PTI BUILDING, 4 PARLIAMENT STREET
SANSAD MARG AREA, NEW DELHI - 110001

DESIGN CONSULTANT:
ANANDJIWALA INFRA ADVISORY
9, Shivranjani Shopping Center, On 132 Feet Ring Road
Nr. Shivranjani Cross Road, Satellite, Ahmedabad - 380 015
Email: anandjiwalainfra@gmail.com

PROJECT:
CONSULTANCY SERVICES FOR FEASIBILITY STUDY, PREPARATION OF DETAILED PROJECT REPORT AND PROVIDING PRE-CONSTRUCTION SERVICES FOR UPGRADATION OF EXISTING 2 LANE HIGHWAY TO 4 LANE WITH PAVED SHOULDER CONFIGURATION (NH-144A) FROM KM 26.350 (KHATI CHOWK) TO KM 30.097 (HANUMAN CHOWK) OF JAMMU - AKHNOOR SECTION IN THE UNION TERRITORY OF JAMMU & KASHMIR ON EPC BASIS

SCALE AT A3 SIZE DRAWING
20 0 20 40 60 80 100
2 0 2 4 6 8 10

TITLE:
GAD OF SINGLE CELL BOX CULVERT 6.0x4.00m WITH CUSHION AT CH: 29+327

CLIENT APPROVAL:
SIGNATURE:
DWG NO:-

DRAWN:	CHECKED:	DESIGNED:	APPROVED:
LK	SJ	SC	LA

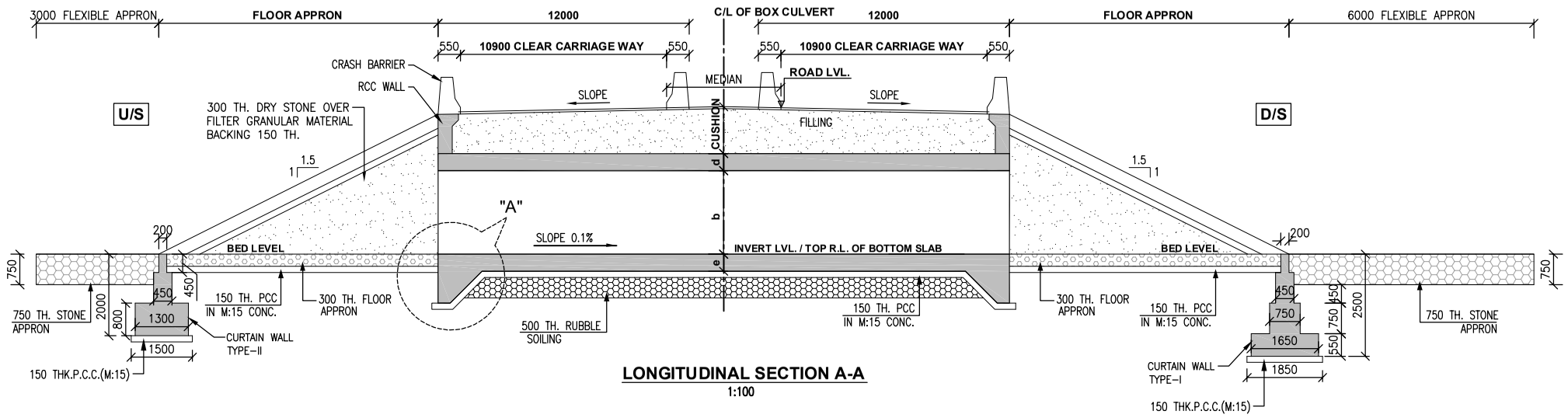

LONGITUDINAL SECTION A-A
1:100

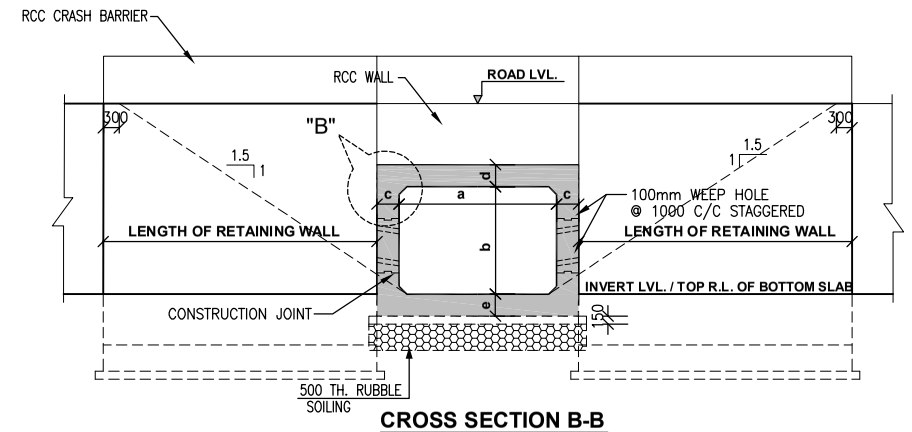

CROSS SECTION B-B
1:100

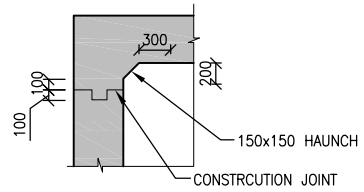

DETAILS AT "B"
1:50

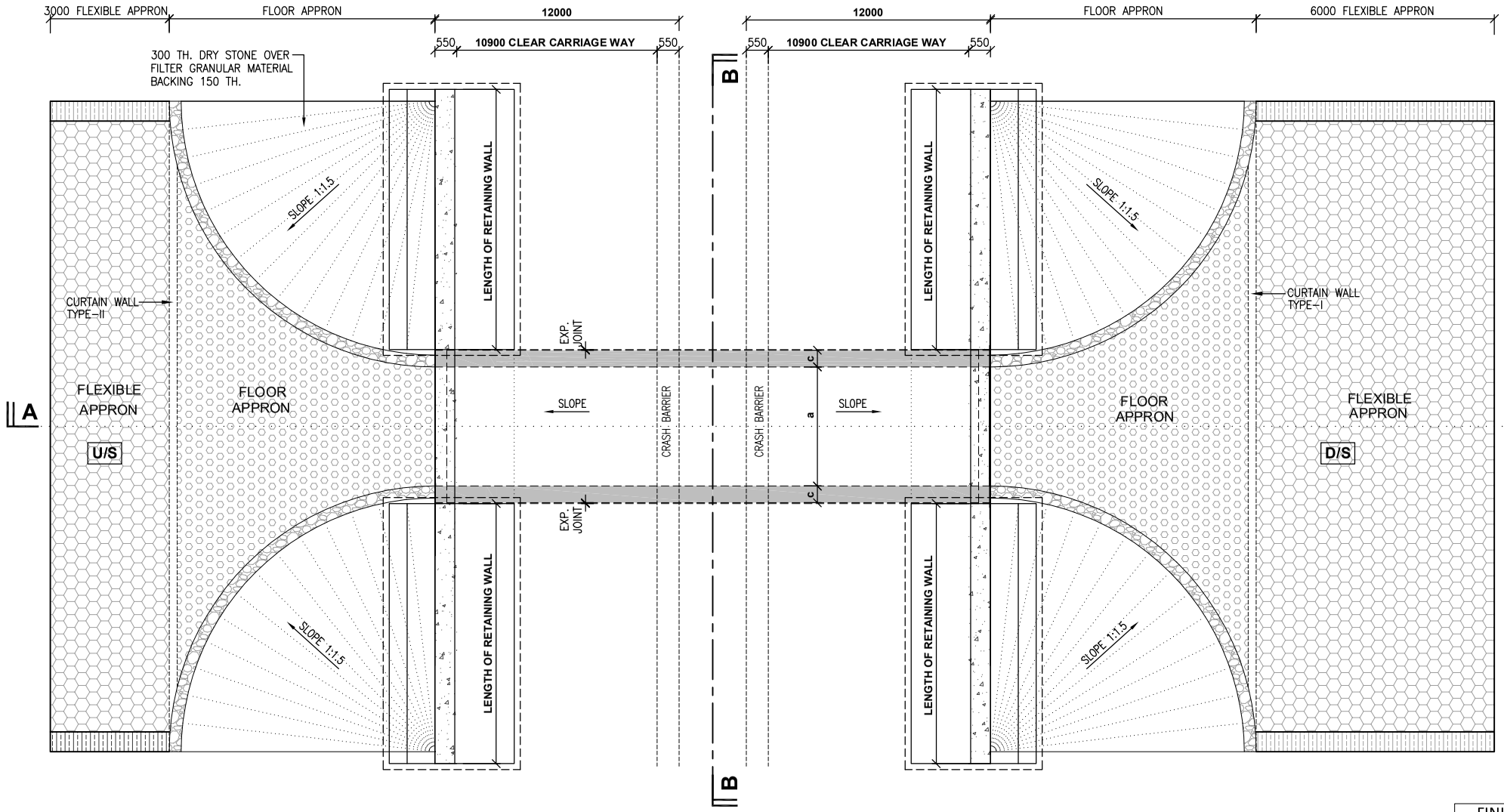

PLAN
1:100

ELEMENTS	CONCRETE GRADE
(a) BOX CELL STRUCTURE	M:40
(b) RCC RETAINING WALL	M:40
(c) PCC CURTAIN & TOE WALL	M:20
(d) LEVELLING COURSE (P.C.C.)	M:15
(e) RCC CRASH BARRIER	M:40
(f) RCC WALL	M:40

NOTES:-

(1) ALL DIMENSIONS ARE IN MILLIMETER.
(2) DO NOT SCALE THIS DRAWING.
(3) THIS DRAWING MUST BE READ IN CONJUNCTION WITH ALL OTHER RELEVANT DRAWINGS.

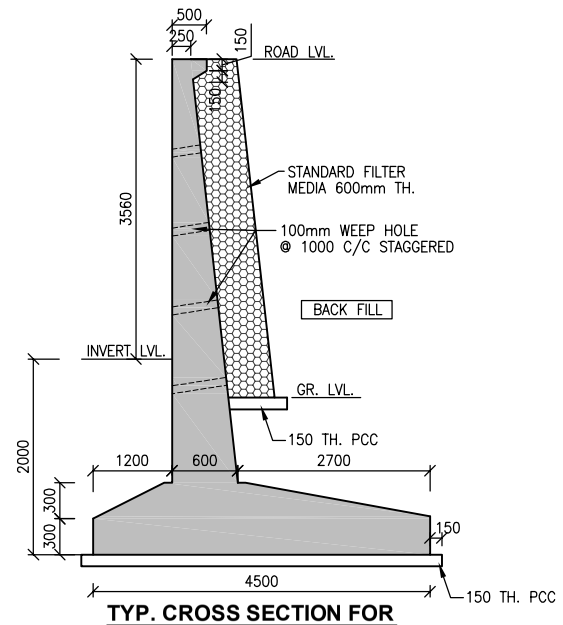

TYP. CROSS SECTION FOR RCC RETAINING WALL

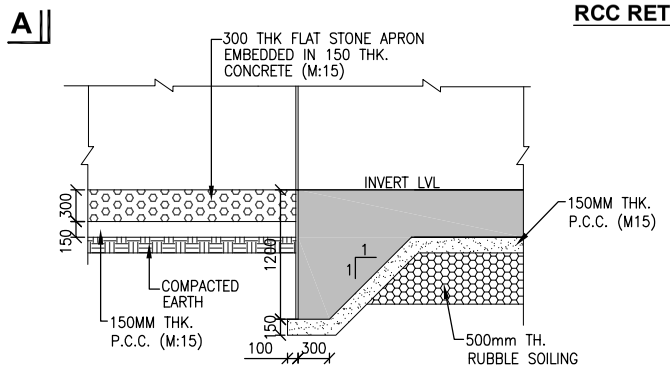

DETAIL AT "A"
1:50

Sr. No.	Design Chainage	No. x w x H	Length	a	b	c	d	e	FINISHED ROAD LEVELS At Center	At LHS	At RHS	LEVELS Foundation Lvl.	PCC Bottom	Top of Bott. Slab	Bot of Top Slab. @ center	Top of Top Slab@ Center	Top of Top Slab @ LHS	Top of Top Slab @ RHS	EARTH CUSHION
C10	29+641	1x3mx3m	24	3.000	3.000	0.300	0.300	0.350	360.719	360.419	360.419	356.069	355.919	356.419	359.419	359.719	359.719	359.719	1.000 m

REV.	DATE	REVISIONS

CLIENT:
NATIONAL HIGHWAYS & INFRASTRUCTURE DEVELOPMENT CORPORATION LTD.
PTI BUILDING, 4 PARLIAMENT STREET
SANSAD MARG AREA, NEW DELHI - 110001

DESIGN CONSULTANT:
ANANDJIWALA INFRA ADVISORY
9, Shivranjani Shopping Center, On 132 Feet Ring Road
Nr. Shivranjani Cross Road, Satellite, Ahmedabad - 380 015
Email: anandjiwalainfra@gmail.com

PROJECT:
CONSULTANCY SERVICES FOR FEASIBILITY STUDY, PREPARATION OF DETAILED PROJECT REPORT AND PROVIDING PRE-CONSTRUCTION SERVICES FOR UPGRADATION OF EXISTING 2 LANE HIGHWAY TO 4 LANE WITH PAVED SHOULDER CONFIGURATION (NH-144A) FROM KM 26.350 (KHATI CHOWK) TO KM 30.097 (HANUMAN CHOWK) OF JAMMU - AKHNOOR SECTION IN THE UNION TERRITORY OF JAMMU & KASHMIR ON EPC BASIS

SCALE AT A3 SIZE DRAWING
20 0 20 40 60 80 100
2 0 2 4 6 8 10

TITLE:
GAD OF SINGLE CELL BOX CULVERT 3.0x3.0 m WITH CUSHION AT CH: 29+641

CLIENT APPROVAL:
SIGNATURE:
DWG NO:-

DRAWN:	CHECKED:	DESIGNED:	APPROVED:
LK	SJ	SC	LA

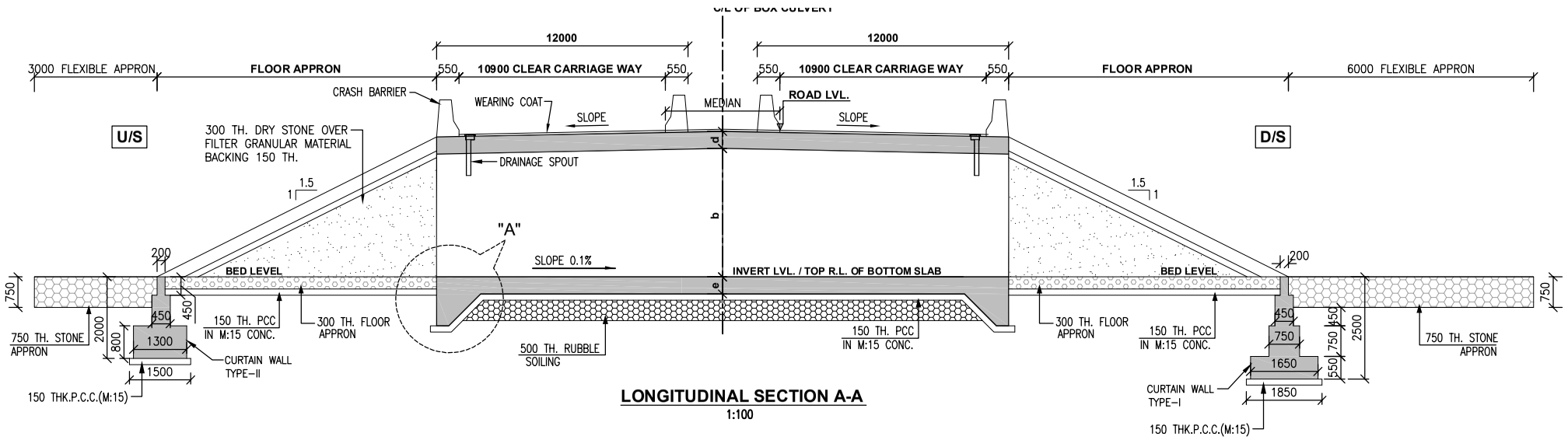

LONGITUDINAL SECTION A-A
1:100

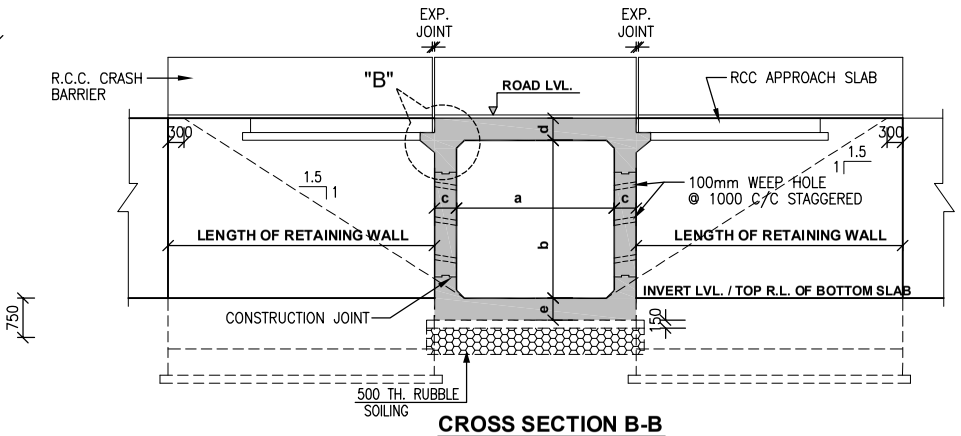

CROSS SECTION B-B
1:100

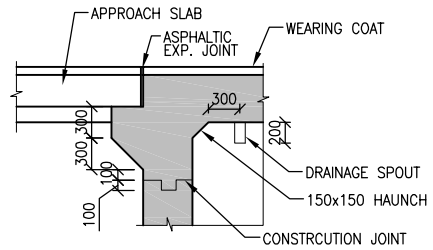

DETAILS AT "B"
1:50

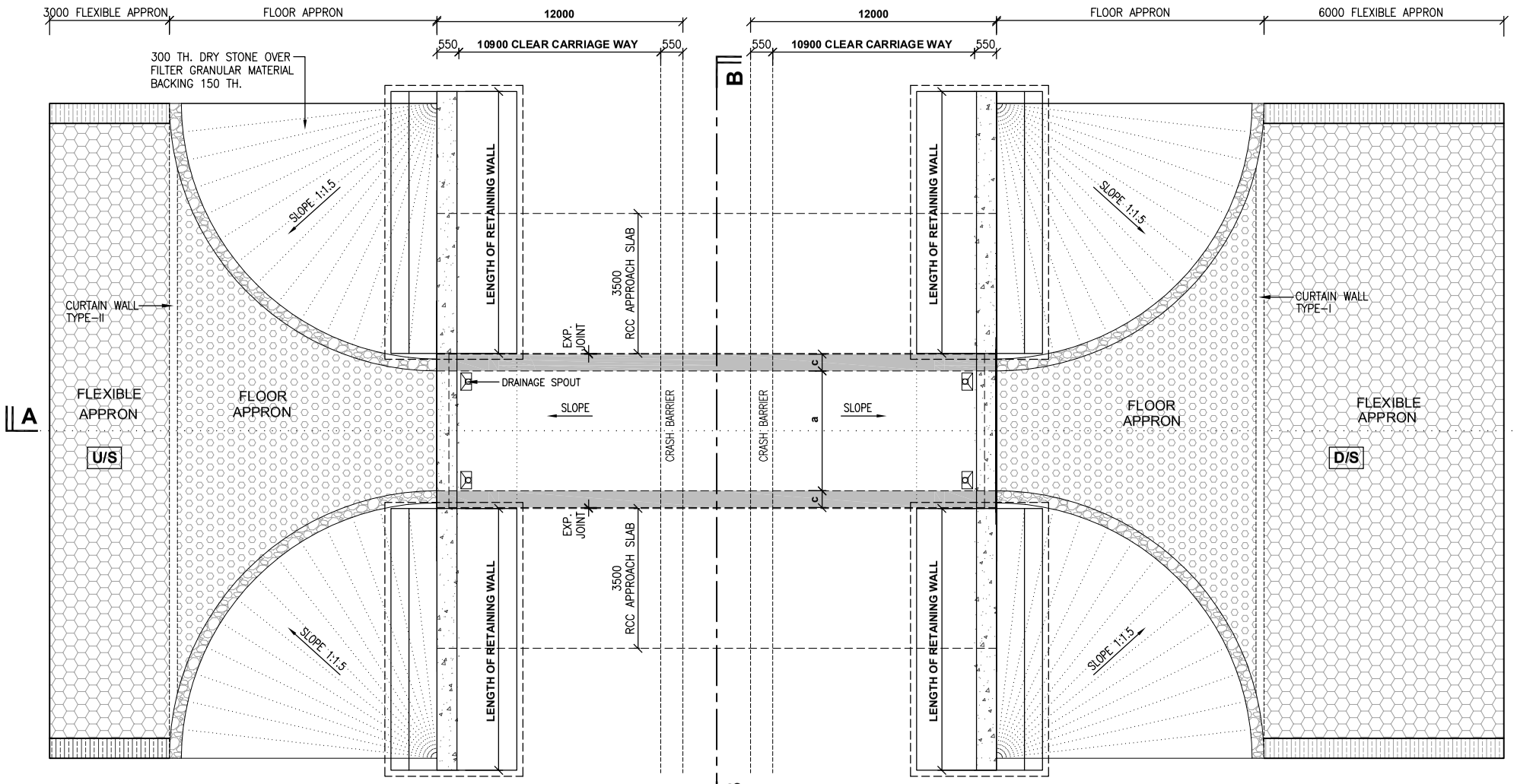

PLAN
1:100

ELEMENTS	CONCRETE GRADE
(a) BOX CELL STRUCTURE	M:40
(b) RCC RETAINING WALL	M:40
(c) PCC CURTAIN & TOE WALL	M:20
(d) LEVELLING COURSE (P.C.C.)	M:15
(e) RCC CRASH BARRIER	M:40
(f) RCC APPROACH SLAB	M:30

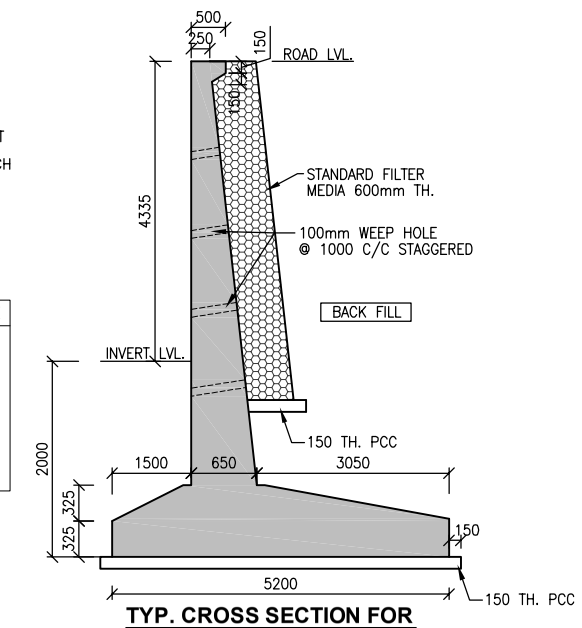

TYP. CROSS SECTION FOR RCC RETAINING WALL

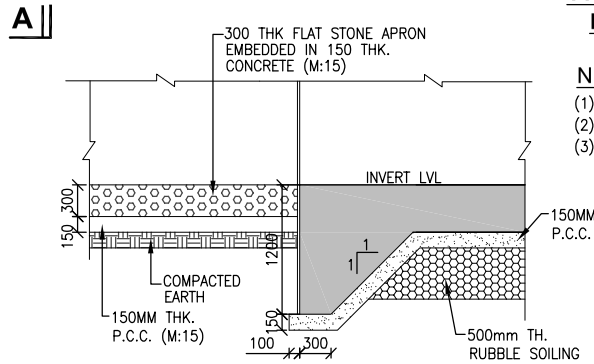

DETAIL AT "A"
1:50

NOTES:-
(1) ALL DIMENSIONS ARE IN MILLIMETER.
(2) DO NOT SCALE THIS DRAWING.
(3) THIS DRAWING MUST BE READ IN CONJUNCTION WITH ALL OTHER RELEVANT DRAWINGS.

Sr. No.	Design Chainage	No. x w x H	Length	a	b	c	d	e	FINISHED ROAD LEVELS At Center	At LHS	At RHS	LEVELS Foundation Lvl.	PCC Bottom	Top of Bott. Slab	Bot of Top Slab. @ center	Top of Top Slab@ Center	Top of Top Slab @ LHS	Top of Top Slab @ RHS
C12	30+217	1x6.0mx4.0m	24	6.000	4.000	0.500	0.500	0.550	366.534	366.234	366.234	361.409	361.259	361.959	365.959	366.459	366.159	366.159

REV.	DATE	REVISIONS

CLIENT:
NATIONAL HIGHWAYS & INFRASTRUCTURE DEVELOPMENT CORPORATION LTD.
PTI BUILDING, 4 PARLIAMENT STREET
SANSAD MARG AREA, NEW DELHI - 110001

DESIGN CONSULTANT:
ANANDJIWALA INFRA ADVISORY
9, Shivranjani Shopping Center, On 132 Feet Ring Road
Nr. Shivranjani Cross Road, Satellite, Ahmedabad - 380 015
Email: anandjiwalainfra@gmail.com

PROJECT:
CONSULTANCY SERVICES FOR FEASIBILITY STUDY, PREPARATION OF DETAILED PROJECT REPORT AND PROVIDING PRE-CONSTRUCTION SERVICES FOR UPGRADATION OF EXISTING 2 LANE HIGHWAY TO 4 LANE WITH PAVED SHOULDER CONFIGURATION (NH-144A) FROM KM 26.350 (KHATI CHOWK) TO KM 30.097 (HANUMAN CHOWK) OF JAMMU - AKHNOOR SECTION IN THE UNION TERRITORY OF JAMMU & KASHMIR ON EPC BASIS

SCALE AT A3 SIZE DRAWING

TITLE:
GAD OF SINGLE CELL BOX CULVERT 6.0x4.0m WITHOUT CUSHION AT CH: 30+217

CLIENT APPROVAL: | SIGNATURE:

DWG NO:-

DRAWN:	CHECKED:	DESIGNED:	APPROVED:
LK	SJ	SC	LA

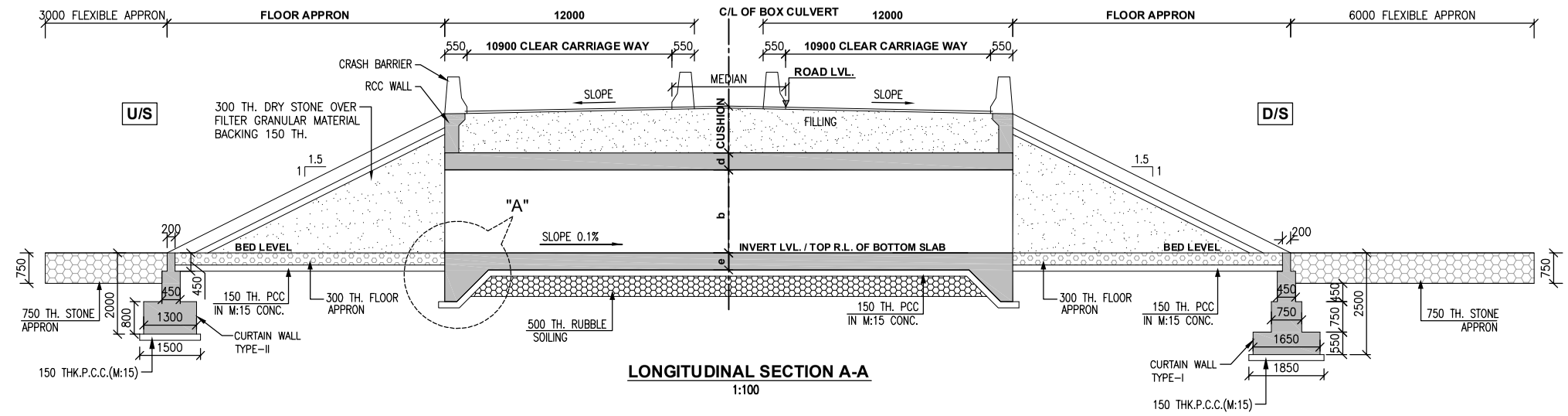

LONGITUDINAL SECTION A-A
1:100

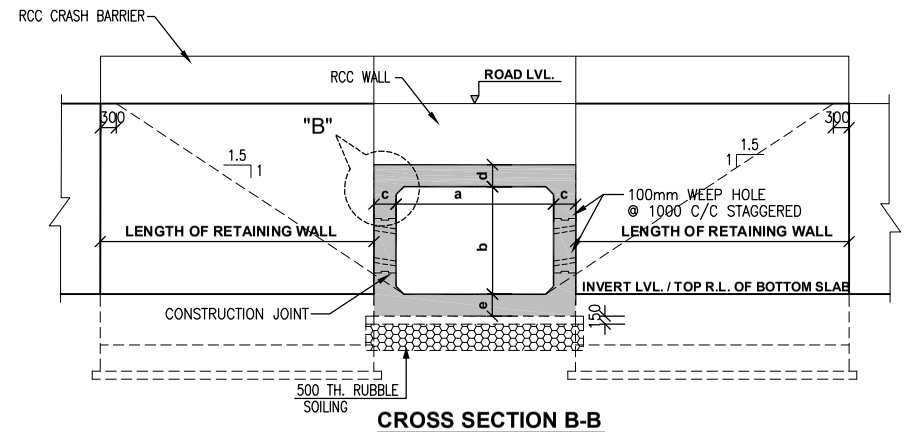

CROSS SECTION B-B
1:100

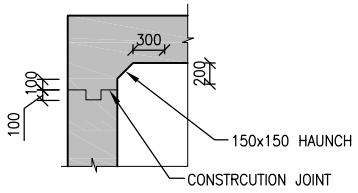

DETAILS AT "B"
1:50

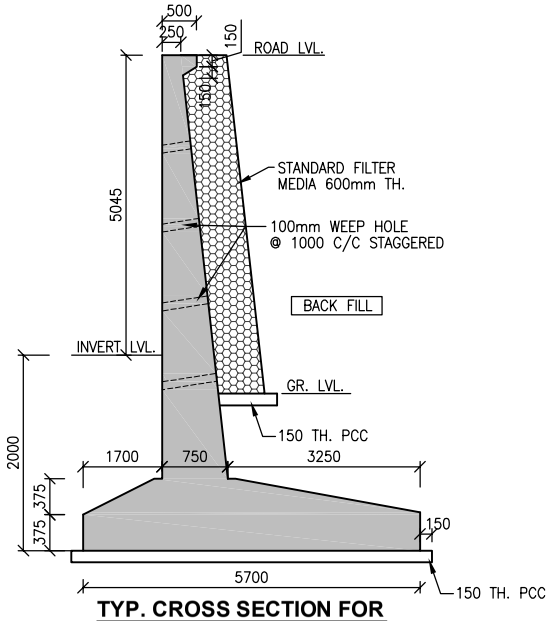

TYP. CROSS SECTION FOR RCC RETAINING WALL

ELEMENTS	CONCRETE GRADE
(a) BOX CELL STRUCTURE	M:40
(b) RCC RETAINING WALL	M:40
(c) PCC CURTAIN & TOE WALL	M:20
(d) LEVELLING COURSE (P.C.C.)	M:15
(e) RCC CRASH BARRIER	M:40
(f) RCC WALL	M:40

NOTES:-

(1) ALL DIMENSIONS ARE IN MILLIMETER.
(2) DO NOT SCALE THIS DRAWING.
(3) THIS DRAWING MUST BE READ IN CONJUNCTION WITH ALL OTHER RELEVANT DRAWINGS.

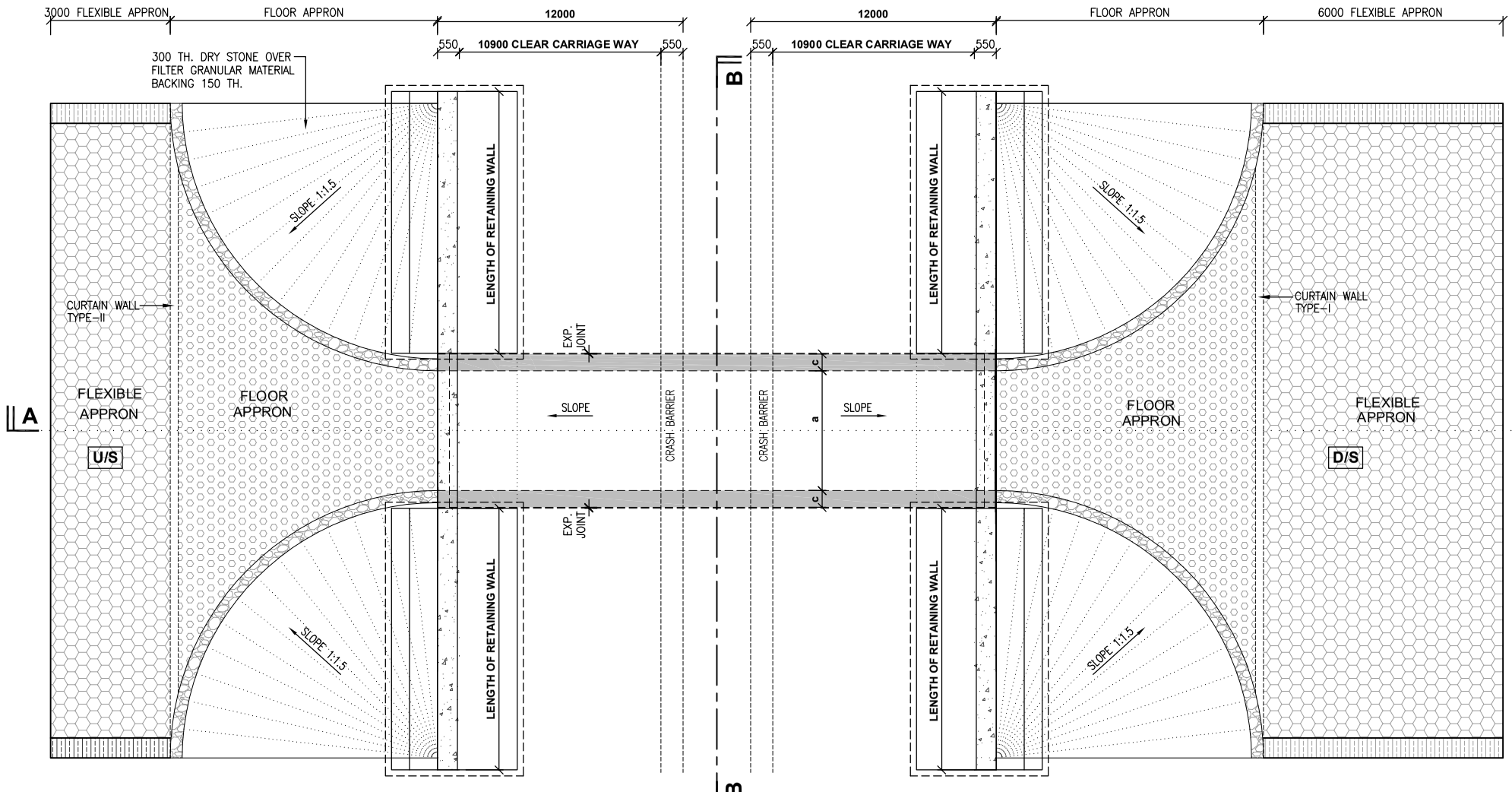

PLAN
1:100

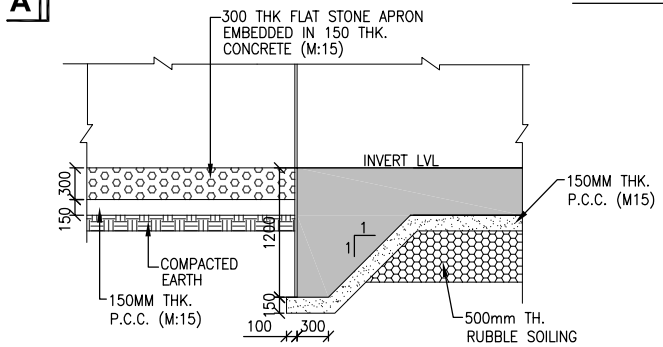

DETAIL AT "A"
1:50

Sr. No.	Design Chainage	No. x w x H	Length	a	b	c	d	e	FINISHED ROAD LEVELS At Center	At LHS	At RHS	LEVELS Foundation Lvl.	PCC Bottom	Top of Bott. Slab	Bot of Top Slab. @ center	Top of Top Slab@ Center	Top of Top Slab @ LHS	Top of Top Slab @ RHS	EARTH CUSHION
C11	29+840	1x7.0mx4.0m	24	7.000	4.000	0.550	0.550	0.600	362.162	361.862	361.862	356.012	355.862	356.612	360.612	361.162	361.162	361.162	1.000m

REV.	DATE	REVISIONS

CLIENT:
NATIONAL HIGHWAYS & INFRASTRUCTURE DEVELOPMENT CORPORATION LTD.
PTI BUILDING, 4 PARLIAMENT STREET
SANSAD MARG AREA, NEW DELHI - 110001

DESIGN CONSULTANT:
ANANDJIWALA INFRA ADVISORY
9, Shivranjani Shopping Center, On 132 Feet Ring Road
Nr. Shivranjani Cross Road, Satellite, Ahmedabad - 380 015
Email: anandjiwalainfra@gmail.com

PROJECT:
CONSULTANCY SERVICES FOR FEASIBILITY STUDY, PREPARATION OF DETAILED PROJECT REPORT AND PROVIDING PRE-CONSTRUCTION SERVICES FOR UPGRADATION OF EXISTING 2 LANE HIGHWAY TO 4 LANE WITH PAVED SHOULDER CONFIGURATION (NH-144A) FROM KM 26.350 (KHATI CHOWK) TO KM 30.097 (HANUMAN CHOWK) OF JAMMU - AKHNOOR SECTION IN THE UNION TERRITORY OF JAMMU & KASHMIR ON EPC BASIS

SCALE AT A3 SIZE DRAWING
20 0 20 40 60 80 100
2 0 2 4 6 8 10

TITLE:
GAD OF SINGLE CELL BOX CULVERT 7.0x4.0m WITH CUSHION AT CH: 29+840

CLIENT APPROVAL: | SIGNATURE:

DWG NO:-

DRAWN:	CHECKED:	DESIGNED:	APPROVED:
LK	SJ	SC	LA

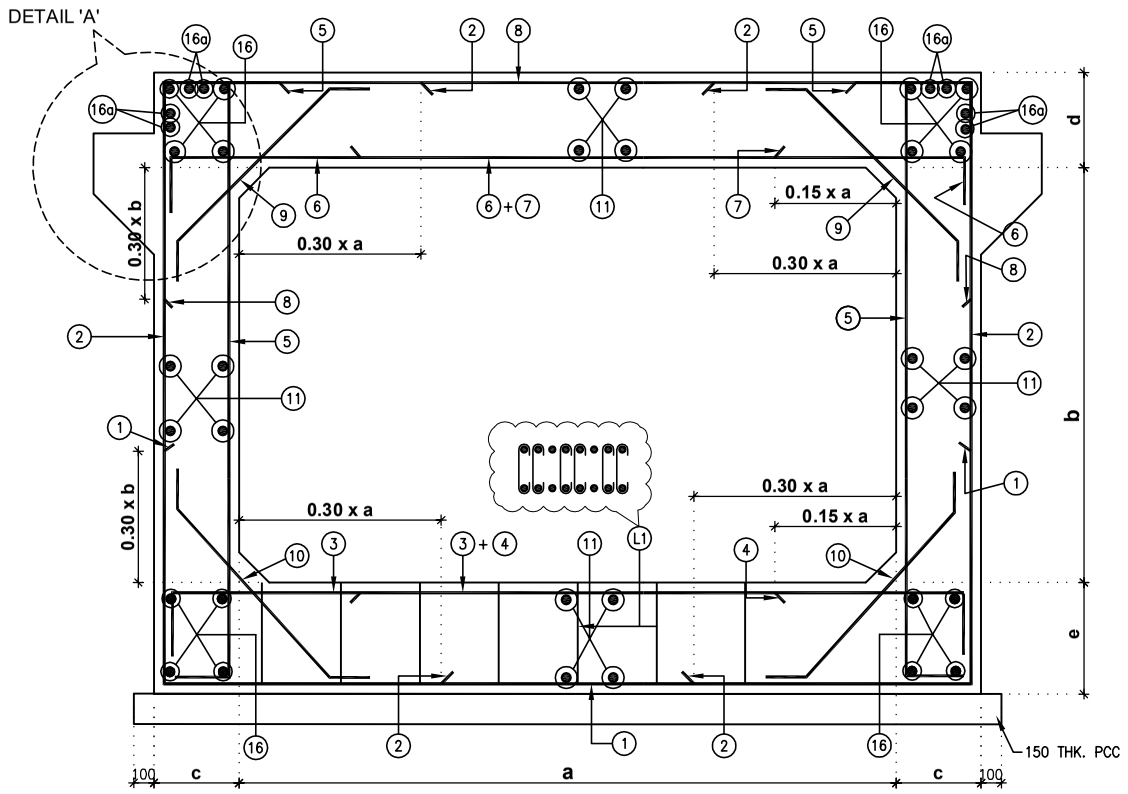

REINFORCEMENT DETAILS OF SINGLE CELL BOX CULVERT
SCALE-1:25

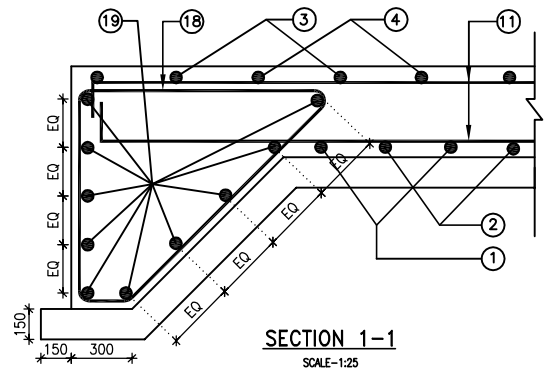

SECTION 1-1
SCALE-1:25

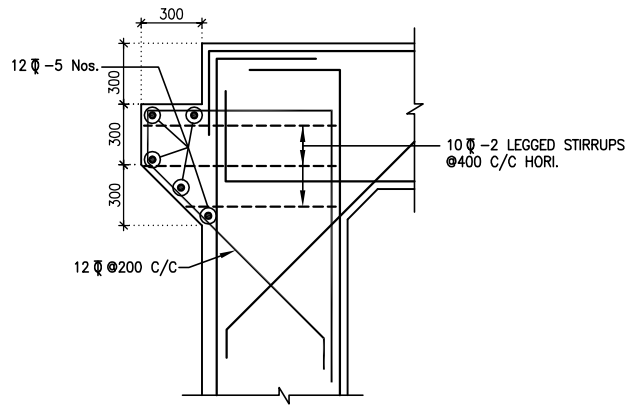

DETAIL AT 'A'
SCALE-1:25
THIS REINF. IS NOT INCLUDED IN BAR BENDING SCHEDULE

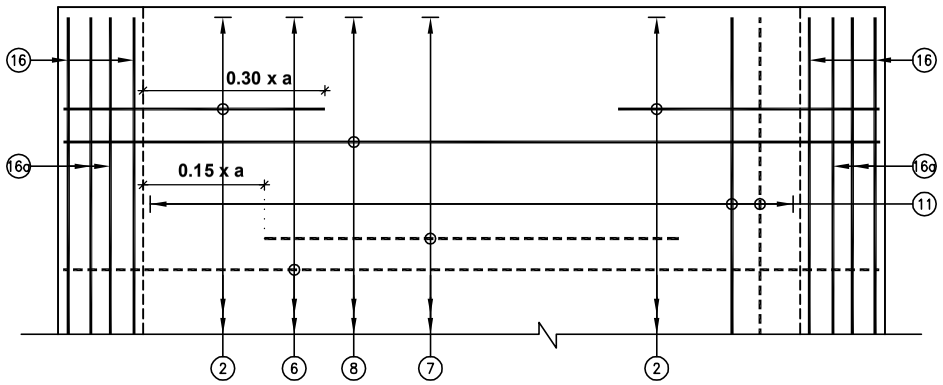

REINFORCEMENT DETAILS PLAN OF TOP SLAB SCALE-1:25
(BAR MARK 5, 16a KERB AND HAUNCH LINE NOT SHOWN IN PLAN)

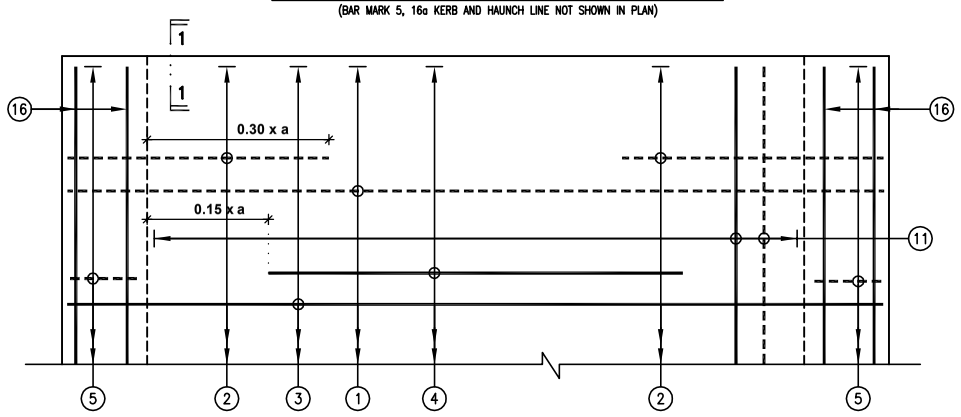

REINFORCEMENT DETAILS PLAN OF BOTTOM SLAB SCALE-1:25
(HAUNCH LINE NOT SHOWN IN PLAN)

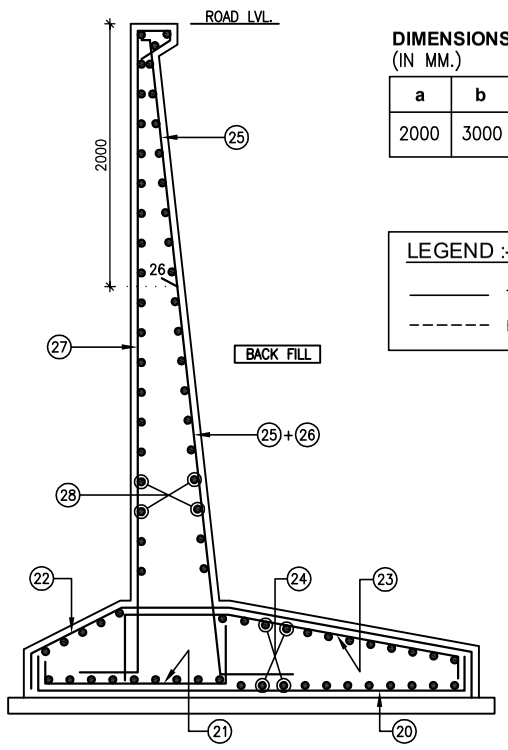

REINF. DETAILS OF RETAINING WALL

DIMENSIONS DETAILS
(IN MM.)

a	b	c	d	e
2000	3000	300	300	300

LEGEND :-

——— TOP FACE BARS / OUTER FACE BAR

- - - - - - BOTTOM FACE BARS / INNER FACE BAR

SCHEDULE OF REINFORCEMENT (TMT Fe:500 D GRADE REIN.)

MK. OF BAR	SHAPE OF BAR	DIA. OF BAR	SPACING IN MM.	LENGTH IN METER	NOS. OF BARS	TOTAL LENGTH IN MT.	WEIGHT /RMT. IN KG.	TOTAL WEIGHT IN KG.
1	900, 2450, 900	12	200	4.250	120	510.00	0.888	453
2	825, 3450, 825	12	200	5.100	120x2= 240	1224.00	0.888	1087
3	250, 2450, 250	12	200	2.950	120	354.00	0.888	314
4	1400	12	200	1.400	120	168.00	0.888	150
5	200, 3450, 150	12	100	3.800	240x2=480	1824.00	0.888	1620
6	300, 2450, 300	12	200	3.050	120	366.00	0.888	325
7	1400	12	200	1.400	120	168.00	0.888	150
8	650, 2450, 650	12	200	3.750	120	450.00	0.888	400
9	200, 1380, 200	10	200	1.780	121x2= 242	430.76	0.620	267
10	200, 1380, 200	10	200	1.780	121x2= 242	430.76	0.620	267
11	150, 23900, 150	10	200	24.200	(10+15)x4 =100	2420.00	0.62	1500
16	200, 23900, 200	10	–	24.200	16	387.20	0.620	240
16a	200, 23900, 200	10	–	24.200	8	193.60	0.620	120
18	1100, 90, 200, 1300, 1506, 75	10	150	4.256	17x2=34	144.71	0.620	90
L1	150	8	300	0.300	80x9=720	216.00	0.395	86
19	200, 2500, 200	10	--	2.800	20	56.00	0.620	56
20	125, 4250, 125	12	200	4.500	27x4=108	486.00	0.888	432
21	125, 1525, 300	16	200	1.950	27x4=108	210.6	1.578	333
22	125, 1000, 600, 2750, 125	12	200	4.600	27x4=108	496.80	0.888	442
23	300, 600, 2750, 125	16	200	3.775	27x4=108	407.70	1.578	643
24	150, 5430	12	200	5.43	19x2x4= 152	825.36	0.888	733
25	5500, 350, 150	16	200	6.000	27x4=108	648.00	1.578	1023
26	150, 3500, 350	16	200	4.000	27x4=108	432.00	1.578	682
27	150, 5500, 50, 400, 350	12	200	6.450	27x4=108	696.60	0.888	619
28	5430	12	200	5.43	25x2x4= 200	1086.00	0.888	964
						TOTAL		12996
						ADD 2.5% WASTAGE AND LAP		325
						TOTAL IN KG.		13321

* BAR MK '12', '13', '14', '15' & '17' ARE NOT IN USED.

NOTES:-

(1) ALL DIMENSIONS ARE IN MILLIMETER.
(2) DO NOT SCALE THIS DRAWING FOLLOW ONLY WRITTEN DIMENSIONS.
(3) THIS DRAWING MUST BE READ IN CONJUNCTION WITH ALL OTHER RELEVANT DRAWINGS.
(4) ϕ INDICATES TMT Fe:500 D REINFORCEMENT AND CONFORMING TO IS: 1786 (INCLUDING LATEST AMMENDMENTS.)
(5) CONCRETE MIX SHALL BE M:40 FOR RCC BOX & RETAINING WALL.
(6) CLEAR COVER TO ANY REINFORCEMENT SHALL BE 75 MM FOR BOTTOM SLAB & WALL AND 50 MM FOR TOP SLAB & RETAINING WALL.
(7) NUMBER OF BAR SHOULD NOT BE COUNTED BUT NUMBER OF BAR AND SPACING INDICATED SHALL BE ADOPTED.
(8) LAP IF REQUIRED SHALL BE 87 x DIA. OF BARS.
(9) SCHEDULE OF REINFORCEMENT IS ONLY FOR GUIDANCE AND SHALL BE VARIFIED BEFORE CUTTING / BENDING THE BAR.
(10) DISTRIBUTION REINFORCEMENT SHALL BE SECURELY TIED WITH THE MAIN REINFORCEMENT AT ALL JOINTS.
(11) SUITABLE SUPPORT SYSTEM SHALL BE PROVIDED BETWEEN ROWS OF MAIN BARS TO MAINTAIN THERE CORRECT PLACING.
(12) BACK FILLING BEHIND THE BOX SHALL BE WITH MATERIAL HAVING ϕ=30° AND C=0 (ZERO).
(13) NET & GROSS S.B.C. SHOULD NOT BE LESS THAN 16.00 & 20.00 T/SQ.MT.

REV.	DATE	REVISIONS

CLIENT:
NATIONAL HIGHWAYS & INFRASTRUCTURE DEVELOPMENT CORPORATION LTD.
PTI BUILDING, 4 PARLIAMENT STREET
SANSAD MARG AREA, NEW DELHI - 110001

DESIGN CONSULTANT:
ANANDJIWALA INFRA ADVISORY
9, Shivranjani Shopping Center, On 132 Feet Ring Road
Nr. Shivranjani Cross Road, Satellite, Ahmedabad - 380 015
Email: anandjiwalainfra@gmail.com

PROJECT:
CONSULTANCY SERVICES FOR FEASIBILITY STUDY, PREPARATION OF DETAILED PROJECT REPORT AND PROVIDING PRE-CONSTRUCTION SERVICES FOR UPGRADATION OF EXISTING 2 LANE HIGHWAY TO 4 LANE WITH PAVED SHOULDER CONFIGURATION (NH-144A) FROM KM 26.350 (KHATI CHOWK) TO KM 30.097 (HANUMAN CHOWK) OF JAMMU - AKHNOOR SECTION IN THE UNION TERRITORY OF JAMMU & KASHMIR ON EPC BASIS

SCALE AT A3 SIZE DRAWING

TITLE:
REINFORCEMENT DRAWING OF SINGLE CELL BOX CULVERT 2.0x3.0m WITHOUT CUSHION AT CH: 26+843

CLIENT APPROVAL:	SIGNATURE:

DWG NO:-

DRAWN:	CHECKED:	DESIGNED:	APPROVED:
LK	SJ	SC	LA

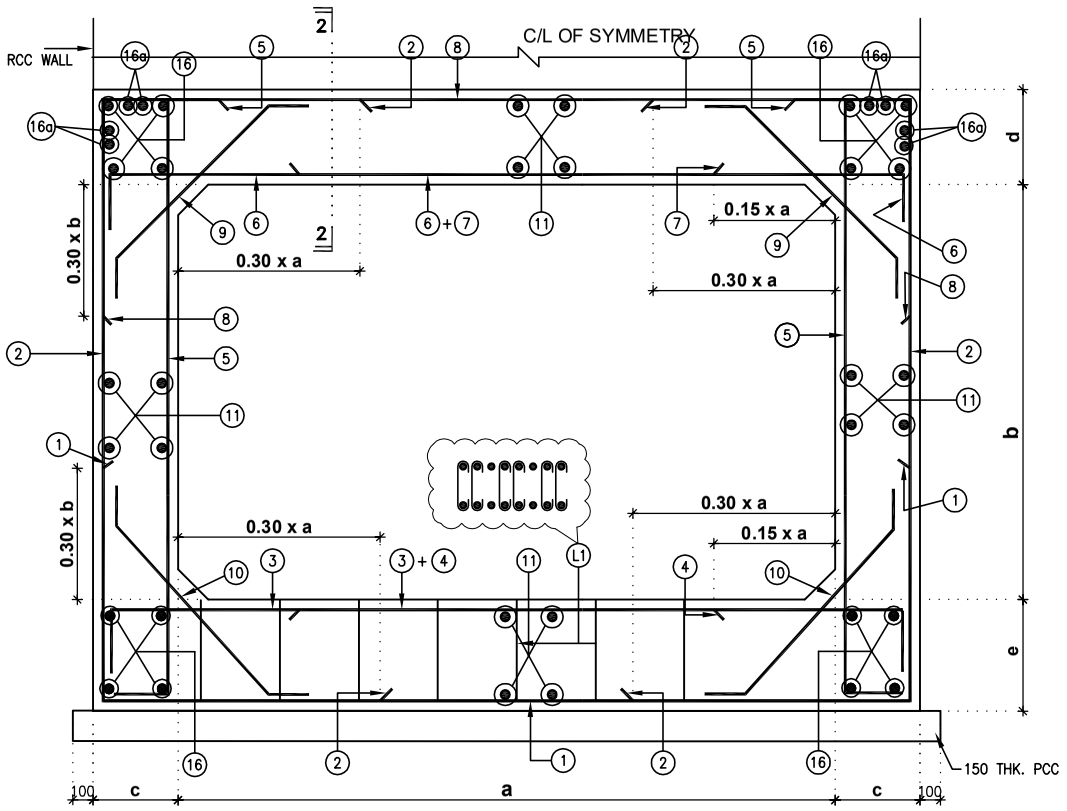

REINFORCEMENT DETAILS OF SINGLE CELL BOX CULVERT
SCALE-1:25

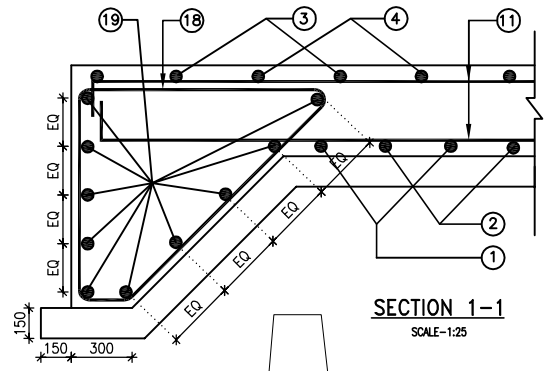

SECTION 1-1
SCALE-1:25

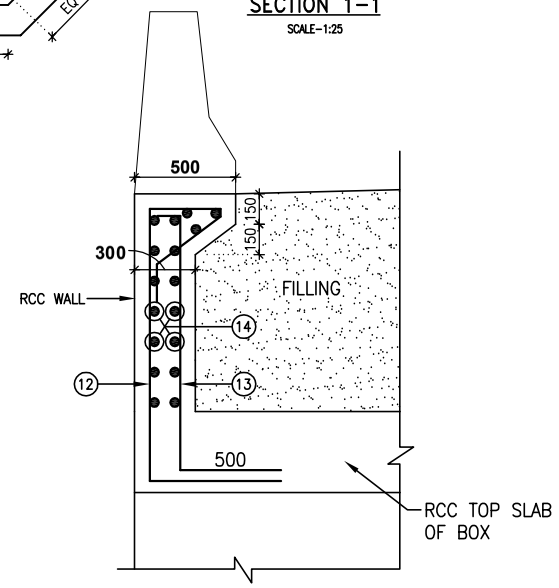

SECTION 2-2
SCALE-1:25

DIMENSIONS DETAILS
(IN MM.)

a	b	c	d	e
2000	3000	300	300	300

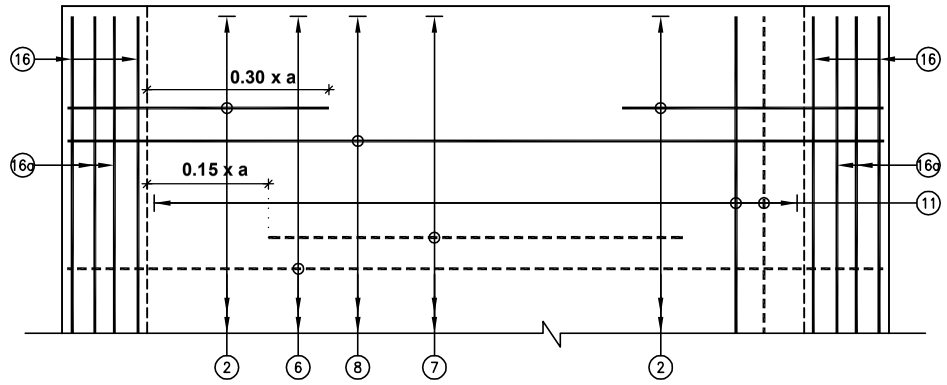

REINFORCEMENT DETAILS PLAN OF TOP SLAB SCALE-1:25
(BAR MARK 5, 16a KERB AND HAUNCH LINE NOT SHOWN IN PLAN)

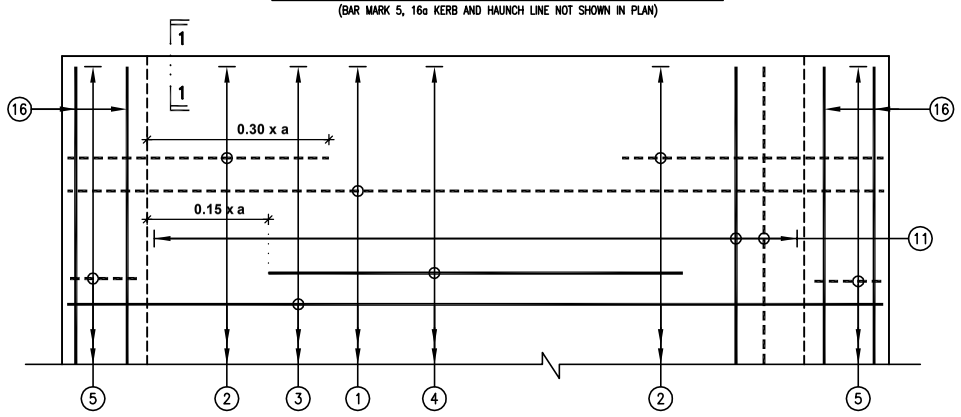

REINFORCEMENT DETAILS PLAN OF BOTTOM SLAB SCALE-1:25
(HAUNCH LINE NOT SHOWN IN PLAN)

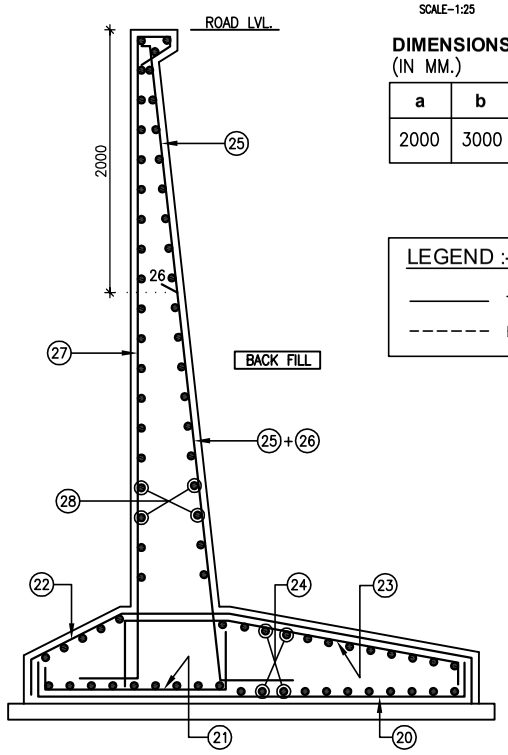

REINF. DETAILS OF RETAINING WALL

LEGEND :-

——— TOP FACE BARS / OUTER FACE BAR

- - - - - BOTTOM FACE BARS / INNER FACE BAR

SCHEDULE OF REINFORCEMENT (TMT Fe:500 D GRADE REIN.)

MK. OF BAR	SHAPE OF BAR	DIA. OF BAR	SPACING IN MM.	LENGTH IN METER	NOS. OF BARS	TOTAL LENGTH IN MT.	WEIGHT /RMT. IN KG.	TOTAL WEIGHT IN KG.
1	900, 2450, 900	12	200	4.250	120	510.00	0.888	453
2	825, 3450, 825	12	200	5.100	120x2= 240	1224.00	0.888	1087
3	250, 2450, 250	12	200	2.950	120	354.00	0.888	314
4	1400	12	200	1.400	120	168.00	0.888	150
5	200, 3450, 150	12	100	3.800	240x2=480	1824.00	0.888	1620
6	300, 2450, 300	12	200	3.050	120	366.00	0.888	325
7	1400	12	200	1.400	120	168.00	0.888	150
8	650, 2450, 650	12	200	3.750	120	450.00	0.888	400
9	200, 1380, 200	10	200	1.780	121x2= 242	430.76	0.620	267
10	200, 1380, 200	10	200	1.780	121x2= 242	430.76	0.620	267
11	150, 23900, 150	10	200	24.200	(10+15)x4 =100	2420.00	0.62	1500
16	200, 23900, 200	10	–	24.200	16	387.20	0.620	240
16a	200, 23900, 200	10	–	24.200	8	193.60	0.620	120
18	1100, 90, 1300, 1556, 200	10	150	4.256	17x2=34	144.71	0.620	90
L1	75, 150	8	300	0.300	80x9=720	216.00	0.395	86
19	200, 2500, 200	10	--	2.800	20	56.00	0.620	56
20	125, 4250, 125	12	200	4.500	27x4=108	486.00	0.888	432
21	125, 1525, 300	16	200	1.950	27x4=108	210.6	1.578	333
22	125, 1000, 600, 2750, 125	12	200	4.600	27x4=108	496.80	0.888	442
23	300, 600, 2750, 125	16	200	3.775	27x4=108	407.70	1.578	643
24	150, 5430	12	200	5.43	19x2x4= 152	825.36	0.888	733
25	5500, 350, 150	16	200	6.000	27x4=108	648.00	1.578	1023
26	150, 3500, 350	16	200	4.000	27x4=108	432.00	1.578	682
27	150, 5500, 50, 400, 350	12	200	6.450	27x4=108	696.60	0.888	619
28	5430	12	200	5.43	25x2x4= 200	1086.00	0.888	964
						TOTAL		12996
						ADD 2.5% WASTAGE AND LAP		325
						TOTAL IN KG.		13321

* BAR MK '12', '13', '14', '15' & '17' ARE NOT IN USED.

NOTES:-

(1) ALL DIMENSIONS ARE IN MILLIMETER.
(2) DO NOT SCALE THIS DRAWING FOLLOW ONLY WRITTEN DIMENSIONS.
(3) THIS DRAWING MUST BE READ IN CONJUNCTION WITH ALL OTHER RELEVANT DRAWINGS.
(4) ⌀ INDICATES TMT Fe:500 D REINFORCEMENT AND CONFORMING TO IS: 1786 (INCLUDING LATEST AMMENDMENTS.)
(5) CONCRETE MIX SHALL BE M:40 FOR RCC BOX & RETAINING WALL.
(6) CLEAR COVER TO ANY REINFORCEMENT SHALL BE 75 MM FOR BOTTOM SLAB & WALL AND 50 MM FOR TOP SLAB & RETAINING WALL.
(7) NUMBER OF BAR SHOULD NOT BE COUNTED BUT NUMBER OF BAR AND SPACING INDICATED SHALL BE ADOPTED.
(8) LAP IF REQUIRED SHALL BE 87 x DIA. OF BARS.
(9) SCHEDULE OF REINFORCEMENT IS ONLY FOR GUIDANCE AND SHALL BE VARIFIED BEFORE CUTTING / BENDING THE BAR.
(10) DISTRIBUTION REINFORCEMENT SHALL BE SECURELY TIED WITH THE MAIN REINFORCEMENT AT ALL JOINTS.
(11) SUITABLE SUPPORT SYSTEM SHALL BE PROVIDED BETWEEN ROWS OF MAIN BARS TO MAINTAIN THERE CORRECT PLACING.
(12) BACK FILLING BEHIND THE BOX SHALL BE WITH MATERIAL HAVING ϕ=30° AND C=0 (ZERO).
(13) NET & GROSS S.B.C. SHOULD NOT BE LESS THAN 16.00 & 20.00 T/SQ.MT.

REV.	DATE	REVISIONS

CLIENT:
NATIONAL HIGHWAYS & INFRASTRUCTURE DEVELOPMENT CORPORATION LTD.
PTI BUILDING, 4 PARLIAMENT STREET
SANSAD MARG AREA, NEW DELHI - 110001

DESIGN CONSULTANT:
ANANDJIWALA INFRA ADVISORY
9, Shivranjani Shopping Center, On 132 Feet Ring Road
Nr. Shivranjani Cross Road, Satellite, Ahmedabad - 380 015
Email: anandjiwalainfra@gmail.com

PROJECT:
CONSULTANCY SERVICES FOR FEASIBILITY STUDY, PREPARATION OF DETAILED PROJECT REPORT AND PROVIDING PRE-CONSTRUCTION SERVICES FOR UPGRADATION OF EXISTING 2 LANE HIGHWAY TO 4 LANE WITH PAVED SHOULDER CONFIGURATION (NH-144A) FROM KM 26.350 (KHATI CHOWK) TO KM 30.097 (HANUMAN CHOWK) OF JAMMU - AKHNOOR SECTION IN THE UNION TERRITORY OF JAMMU & KASHMIR ON EPC BASIS

SCALE AT A3 SIZE DRAWING

TITLE:
REINFORCEMENT DRAWING OF SINGLE CELL BOX CULVERT 2.0x3.0m WITH CUSHION AT CH: 26+818

CLIENT APPROVAL:	SIGNATURE:

DWG NO:-

DRAWN:	CHECKED:	DESIGNED:	APPROVED:
LK	SJ	SC	LA

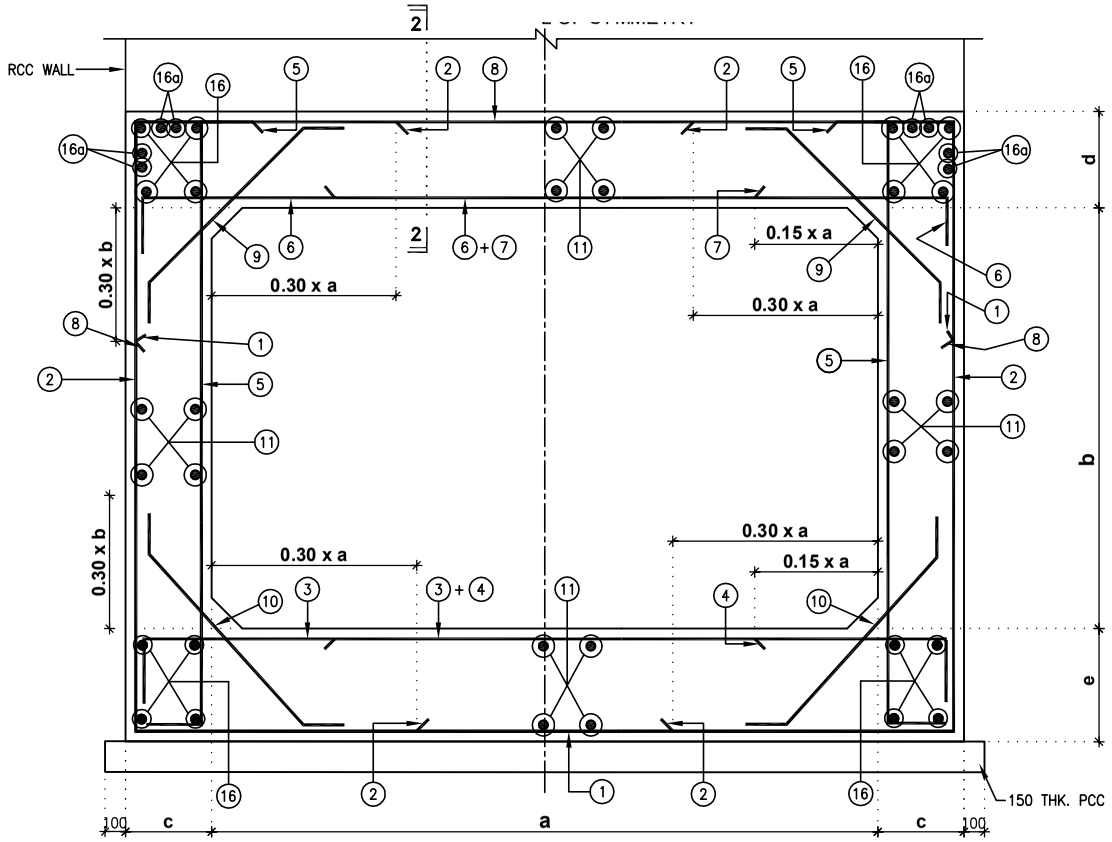

REINFORCEMENT DETAILS OF SINGLE CELL BOX CULVERT
SCALE-1:25

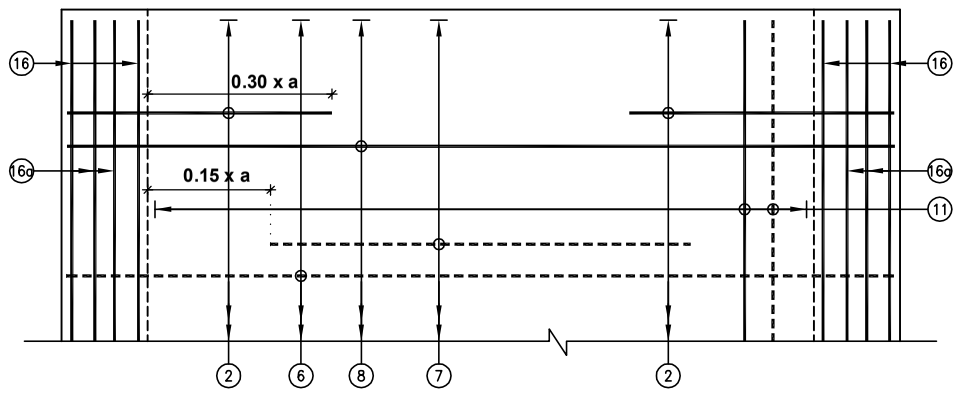

REINFORCEMENT DETAILS PLAN OF TOP SLAB SCALE-1:25
(BAR MARK 5, 16a KERB AND HAUNCH LINE NOT SHOWN IN PLAN)

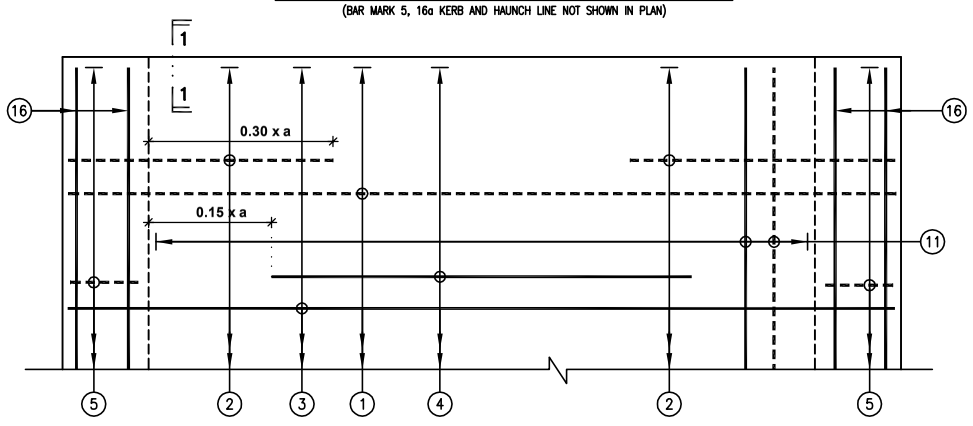

REINFORCEMENT DETAILS PLAN OF BOTTOM SLAB SCALE-1:25
(HAUNCH LINE NOT SHOWN IN PLAN)

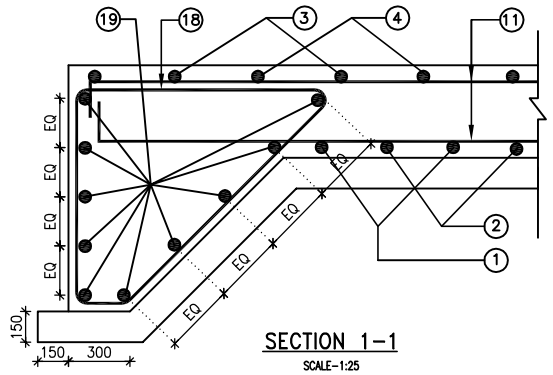

SECTION 1–1
SCALE-1:25

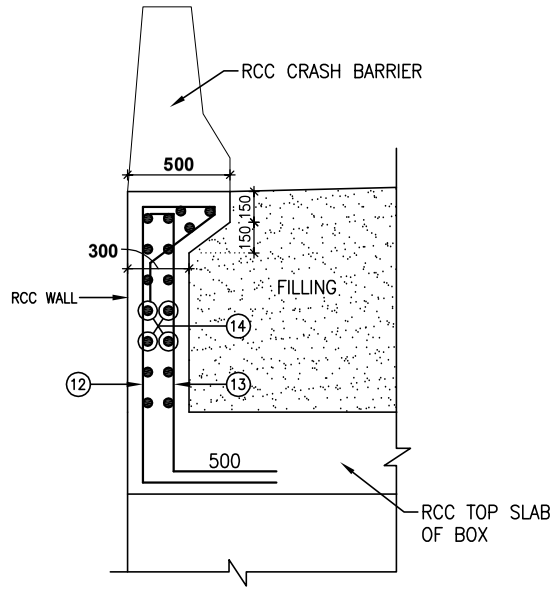

SECTION 2–2
SCALE-1:25

DIMENSIONS DETAILS
(IN MM.)

a	b	c	d	e
12000	6000	700	700	750

LEGEND :-

——— TOP FACE BARS / OUTER FACE BAR

– – – – – – BOTTOM FACE BARS / INNER FACE BAR

SCHEDULE OF REINFORCEMENT (TMT Fe:500D GRADE REIN.)

MK. OF BAR	SHAPE OF BAR	DIA. OF BAR	SPACING IN MM.	LENGTH IN METER	NOS. OF BARS	TOTAL LENGTH IN MT.	WEIGHT /RMT. IN KG.	TOTAL WEIGHT IN KG.
1	2475, 13250, 2475	25	200	18.200	120	2184.00	3.858	8425
2	4225, 7325, 4225	25	200	15.775	120x2= 240	3786.00	3.858	14606
3	350, 13250, 350	25	200	13.950	120	1674.00	3.858	6459
4	8400	25	200	8.400	120	1008.00	3.858	3889
5	200, 7325, 150	16	100	7.675	240x2= 480	3684.00	1.578	5813
6	300, 13250, 300	25	200	13.850	120	1662.00	3.858	6412
7	8400	25	200	8.400	120	1008.00	3.858	3889
8	2450, 13250, 2450	25	200	18.150	120	2178.00	3.858	8403
9	200, 845, 200	10	200	1.245	120x2= 240	298.80	0.620	185
10	200, 845, 200	10	200	1.245	120x2= 240	298.80	0.620	185
11	150, 23900, 150	12	100	24.300	(120+60)x4 =720	17496.00	0.888	15536
12	200, 50, 50, 150, 2500, 750	10	100	4.085	133x2= 266	1086.61	0.620	674
13	200, 2500, 550	10	100	3.250	133x2= 266	864.50	0.620	536
14	150, 13300, 150	8	200	8.300	10x2x2=40	332.00	0.395	132
16	200, 23900, 200	10	–	24.300	16	388.80	0.620	241
16a	200, 23900, 200	10	–	24.300	8	194.40	0.620	121
18	1300, 1100, 87, 1556, 200	10	150	4.256	87x2=174	740.54	0.620	460
19	200, 13300, 200	10	–	8.400	20	168.00	0.620	104
						TOTAL		76070
						ADD.2.5% WASTAGE AND LAP		1902
						TOTAL IN KG.		**77972**

* BAR MK '15' & '17' ARE NOT IN USED.

NOTES:-

(1) ALL DIMENSIONS ARE IN MILLIMETER.
(2) DO NOT SCALE THIS DRAWING FOLLOW ONLY WRITTEN DIMENSIONS.
(3) THIS DRAWING MUST BE READ IN CONJUNCTION WITH ALL OTHER RELEVANT DRAWINGS.
(4) Ø INDICATES TMT Fe:500D REINFORCEMENT AND CONFORMING TO IS: 1786 (INCLUDING LATEST AMMENDMENTS.)
(5) CONCRETE MIX SHALL BE M:40 FOR RCC BOX.
(6) CLEAR COVER TO ANY REINFORCEMENT SHALL BE 75 MM FOR BOTTOM SLAB & WALL AND 50 MM FOR TOP SLAB & RETAINING WALL.
(7) NUMBER OF BAR SHOULD NOT BE COUNTED BUT NUMBER OF BAR AND SPACING INDICATED SHALL BE ADOPTED.
(8) LAP IF REQUIRED SHALL BE 87 x DIA OF BARS.
(9) SCHEDULE OF REINFORCEMENT IS ONLY FOR GUIDANCE AND SHALL BE VARIFIED BEFORE CUTTING / BENDING THE BAR.
(10) DISTRIBUTION REINFORCEMENT SHALL BE SECURELY TIED WITH THE MAIN REINFORCEMENT AT ALL JOINTS.
(11) SUITABLE SUPPORT SYSTEM SHALL BE PROVIDED BETWEEN ROWS OF MAIN BARS TO MAINTAIN THERE CORRECT PLACING.
(12) BACK FILLING BEHIND THE BOX SHALL BE WITH MATERIAL HAVING ø=30° AND C=0 (ZERO).
(13) S.B.C. SHOULD NOT BE LESS THAN 20.00 T/SQ.MT.

REV.	DATE	REVISIONS

CLIENT:
NATIONAL HIGHWAYS & INFRASTRUCTURE DEVELOPMENT CORPORATION LTD.
PTI BUILDING, 4 PARLIAMENT STREET
SANSAD MARG AREA, NEW DELHI - 110001

DESIGN CONSULTANT:
ANANDJIWALA INFRA ADVISORY
9, Shivranjani Shopping Center, On 132 Feet Ring Road
Nr. Shivranjani Cross Road, Satellite, Ahmedabad - 380 015
Email: anandjiwalainfra@gmail.com

PROJECT:
CONSULTANCY SERVICES FOR FEASIBILITY STUDY, PREPARATION OF DETAILED PROJECT REPORT AND PROVIDING PRE-CONSTRUCTION SERVICES FOR UPGRADATION OF EXISTING 2 LANE HIGHWAY TO 4 LANE WITH PAVED SHOULDER CONFIGURATION (NH-144A) FROM KM 26.350 (KHATI CHOWK) TO KM 30.097 (HANUMAN CHOWK) OF JAMMU - AKHNOOR SECTION IN THE UNION TERRITORY OF JAMMU & KASHMIR ON EPC BASIS

SCALE AT A3 SIZE DRAWING

TITLE:
REINFORCEMENT DRAWING OF SINGLE CELL VUP 12.0x6.00m WITH CUSHION AT CH: 27+649

CLIENT APPROVAL: | SIGNATURE:

DWG NO:–

DRAWN:	CHECKED:	DESIGNED:	APPROVED:
LK	SJ	SC	LA

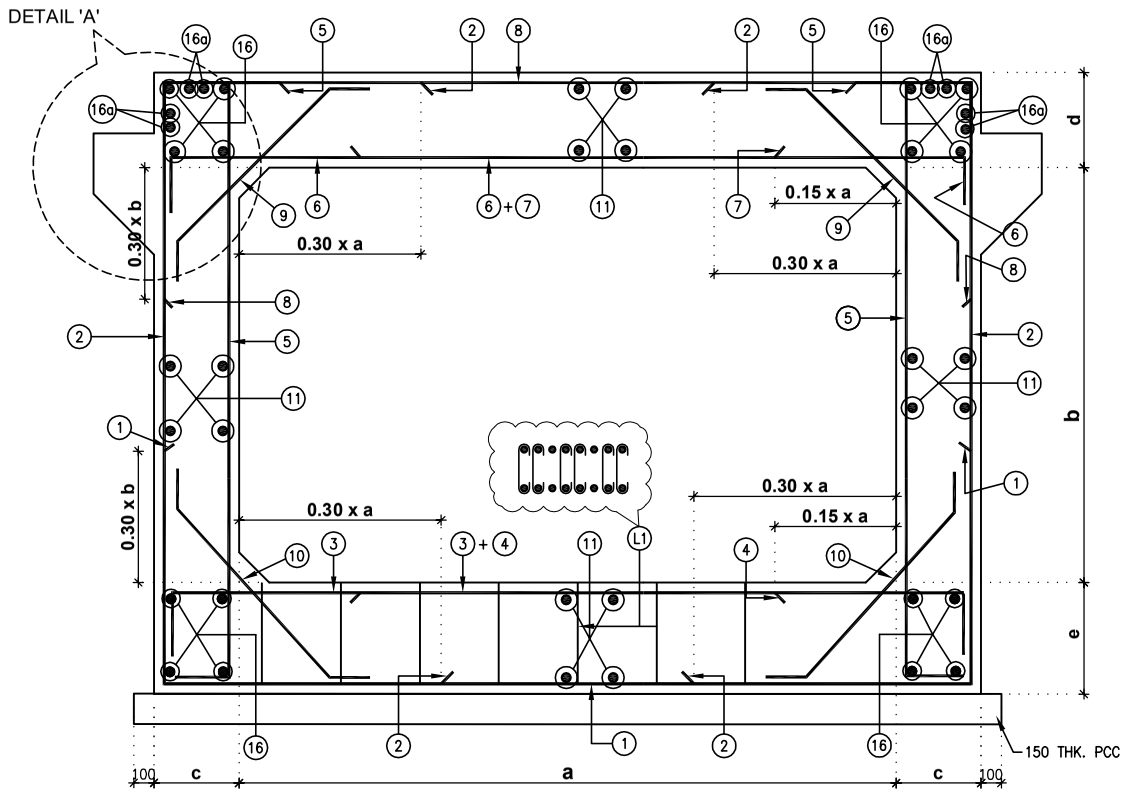

REINFORCEMENT DETAILS OF SINGLE CELL BOX CULVERT
SCALE-1:25

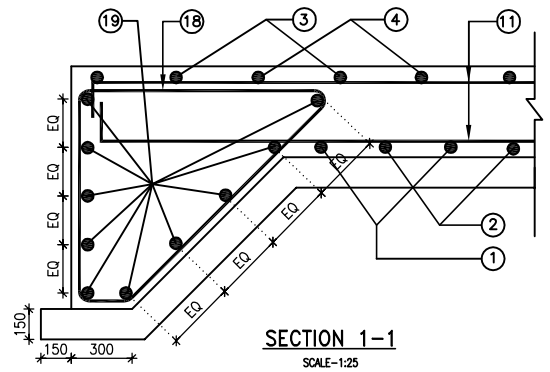

SECTION 1-1
SCALE-1:25

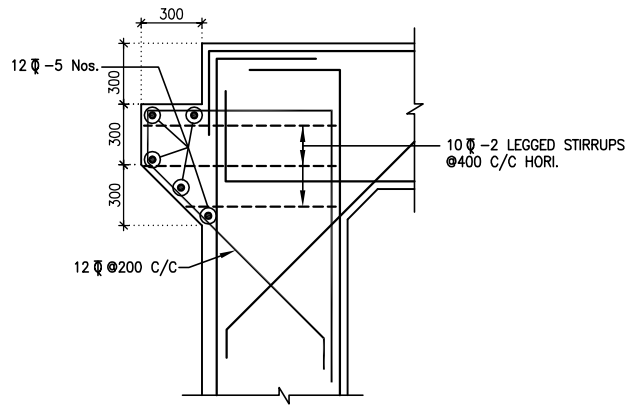

DETAIL AT 'A'
SCALE-1:25
THIS REINF. IS NOT INCLUDED IN BAR BENDING SCHEDULE

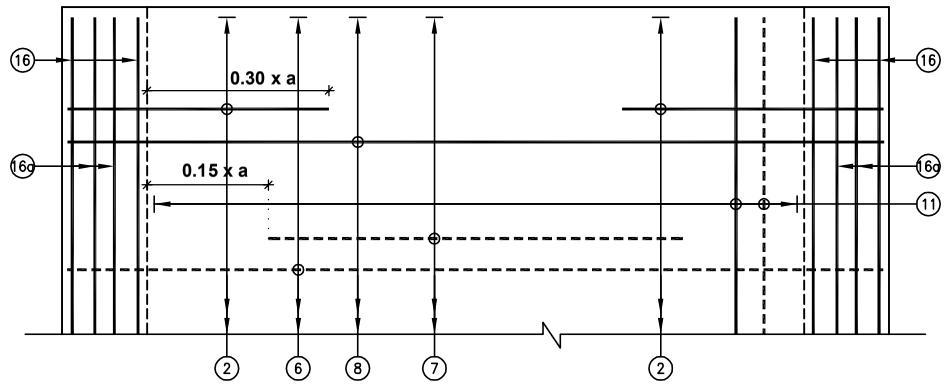

REINFORCEMENT DETAILS PLAN OF TOP SLAB SCALE-1:25
(BAR MARK 5, 16a KERB AND HAUNCH LINE NOT SHOWN IN PLAN)

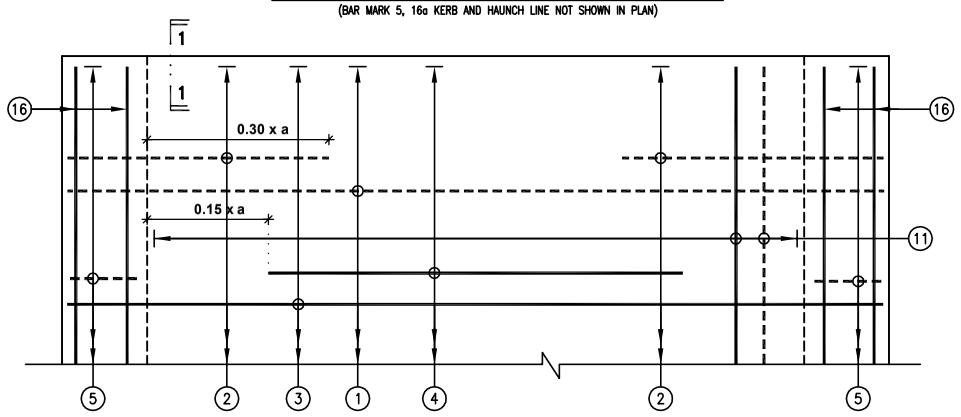

REINFORCEMENT DETAILS PLAN OF BOTTOM SLAB SCALE-1:25
(HAUNCH LINE NOT SHOWN IN PLAN)

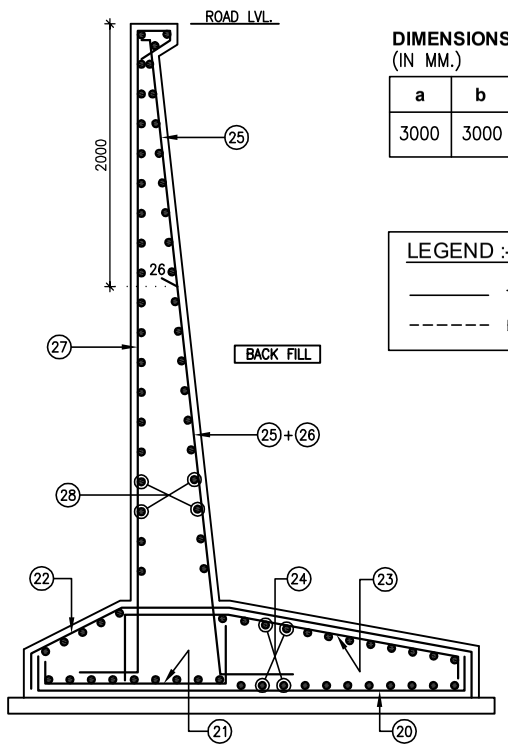

REINF. DETAILS OF RETAINING WALL

DIMENSIONS DETAILS
(IN MM.)

a	b	c	d	e
3000	3000	300	300	350

LEGEND :-

——— TOP FACE BARS / OUTER FACE BAR

- - - - - - BOTTOM FACE BARS / INNER FACE BAR

SCHEDULE OF REINFORCEMENT (TMT Fe:500 D GRADE REIN.)

MK. OF BAR	SHAPE OF BAR	DIA. OF BAR	SPACING IN MM.	LENGTH IN METER	NOS. OF BARS	TOTAL LENGTH IN MT.	WEIGHT /RMT. IN KG.	TOTAL WEIGHT IN KG.
1	1175, 3450, 1175	12	200	5.800	120	696.00	0.888	618
2	1125, 3525, 1125	16	200	5.775	120x2= 240	1386.00	1.578	2187
3	250, 3450, 250	12	200	3.950	120	474.00	0.888	421
4	2100	12	200	2.100	120	252.00	0.888	224
5	200, 3525, 150	12	100	3.875	240x2=480	1860.00	0.888	1652
6	300, 3450, 300	12	200	4.050	120	486.00	0.888	432
7	2100	12	200	2.100	120	252.00	0.888	224
8	1150, 3450, 1150	12	200	5.750	120	690.00	0.888	613
9	200, 1380, 200	10	200	1.780	121x2= 242	430.76	0.620	267
10	200, 1380, 200	10	200	1.780	121x2= 242	430.76	0.620	267
11	150, 23900, 150	10	200	24.200	(15+15)x4 =120	2904.00	0.62	1801
16	200, 23900, 200	10	–	24.200	16	387.20	0.620	240
16a	200, 23900, 200	10	–	24.200	8	193.60	0.620	120
18	1100, 45, 200, 1300, 1556	10	150	4.256	24x2=48	204.29	0.620	127
L1	75, 225	8	300	0.375	80x10=800	300.00	0.395	119
19	200, 3500, 200	10	--	3.900	20	78.00	0.620	48
20	175, 4050, 175	12	200	4.400	24x4=96	422.40	0.888	375
21	175, 1625, 400	16	200	2.200	24x4=96	211.20	1.578	333
22	175, 1150, 500, 2440, 175	12	200	4.440	24x4=96	426.24	0.888	379
23	400, 500, 2440, 175	16	200	3.515	24x4=96	337.44	1.578	532
24	150, 4600	12	200	4.600	21x2x4= 168	772.80	0.888	686
25	150, 1935, 350	12	200	5.435	24x4=96	521.76	0.888	464
26	150, 2935, 350, 150, 50, 400, 4935, 350	20	200	3.435	24x4=96	329.76	2.470	815
27	12	200	5.885	24x4=96	564.96	0.888	502
28	4600	12	200	4.600	23x2x4= 184	846.4	0.888	752
						TOTAL		14198
						ADD 2.5% WASTAGE AND LAP		355
						TOTAL IN KG.		14553

* BAR MK '12', '13', '14', '15' & '17' ARE NOT IN USED.

NOTES:-

(1) ALL DIMENSIONS ARE IN MILLIMETER.
(2) DO NOT SCALE THIS DRAWING FOLLOW ONLY WRITTEN DIMENSIONS.
(3) THIS DRAWING MUST BE READ IN CONJUNCTION WITH ALL OTHER RELEVANT DRAWINGS.
(4) ϕ INDICATES TMT Fe:500 D REINFORCEMENT AND CONFORMING TO IS: 1786 (INCLUDING LATEST AMMENDMENTS.)
(5) CONCRETE MIX SHALL BE M:40 FOR RCC BOX & RETAINING WALL.
(6) CLEAR COVER TO ANY REINFORCEMENT SHALL BE 75 MM FOR BOTTOM SLAB & WALL AND 50 MM FOR TOP SLAB & RETAINING WALL.
(7) NUMBER OF BAR SHOULD NOT BE COUNTED BUT NUMBER OF BAR AND SPACING INDICATED SHALL BE ADOPTED.
(8) LAP IF REQUIRED SHALL BE 87 x DIA. OF BARS.
(9) SCHEDULE OF REINFORCEMENT IS ONLY FOR GUIDANCE AND SHALL BE VARIFIED BEFORE CUTTING / BENDING THE BAR.
(10) DISTRIBUTION REINFORCEMENT SHALL BE SECURELY TIED WITH THE MAIN REINFORCEMENT AT ALL JOINTS.
(11) SUITABLE SUPPORT SYSTEM SHALL BE PROVIDED BETWEEN ROWS OF MAIN BARS TO MAINTAIN THERE CORRECT PLACING.
(12) BACK FILLING BEHIND THE BOX SHALL BE WITH MATERIAL HAVING ϕ=30° AND C=0 (ZERO).
(13) NET & GROSS S.B.C. SHOULD NOT BE LESS THAN 15.00 & 19.00 T/SQ.MT.

REV.	DATE	REVISIONS

CLIENT:
NATIONAL HIGHWAYS & INFRASTRUCTURE DEVELOPMENT CORPORATION LTD.
PTI BUILDING, 4 PARLIAMENT STREET
SANSAD MARG AREA, NEW DELHI - 110001

DESIGN CONSULTANT:
ANANDJIWALA INFRA ADVISORY
9, Shivranjani Shopping Center, On 132 Feet Ring Road
Nr. Shivranjani Cross Road, Satellite, Ahmedabad - 380 015
Email: anandjiwalainfra@gmail.com

PROJECT:
CONSULTANCY SERVICES FOR FEASIBILITY STUDY, PREPARATION OF DETAILED PROJECT REPORT AND PROVIDING PRE-CONSTRUCTION SERVICES FOR UPGRADATION OF EXISTING 2 LANE HIGHWAY TO 4 LANE WITH PAVED SHOULDER CONFIGURATION (NH-144A) FROM KM 26.350 (KHATI CHOWK) TO KM 30.097 (HANUMAN CHOWK) OF JAMMU - AKHNOOR SECTION IN THE UNION TERRITORY OF JAMMU & KASHMIR ON EPC BASIS

SCALE AT A3 SIZE DRAWING

TITLE:
REINFORCEMENT DRAWING OF SINGLE CELL BOX CULVERT 3.0x3.0 m WITHOUT CUSHION AT CH: 28+077

CLIENT APPROVAL:	SIGNATURE:

DWG NO:-

DRAWN:	CHECKED:	DESIGNED:	APPROVED:
LK	SJ	SC	LA

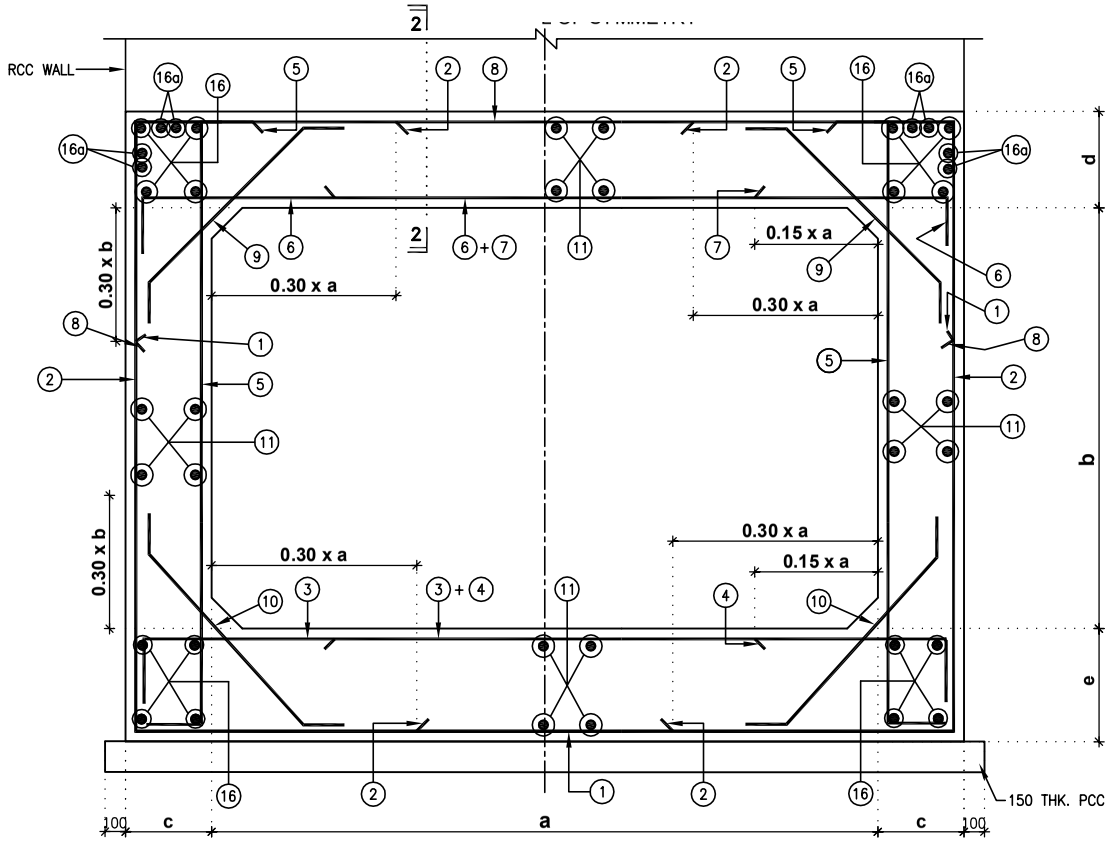

REINFORCEMENT DETAILS OF SINGLE CELL BOX CULVERT
SCALE-1:25

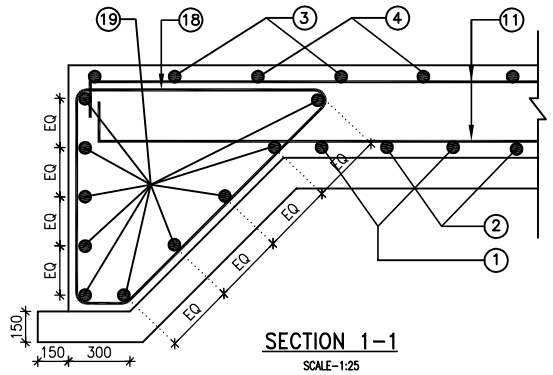

SECTION 1-1
SCALE-1:25

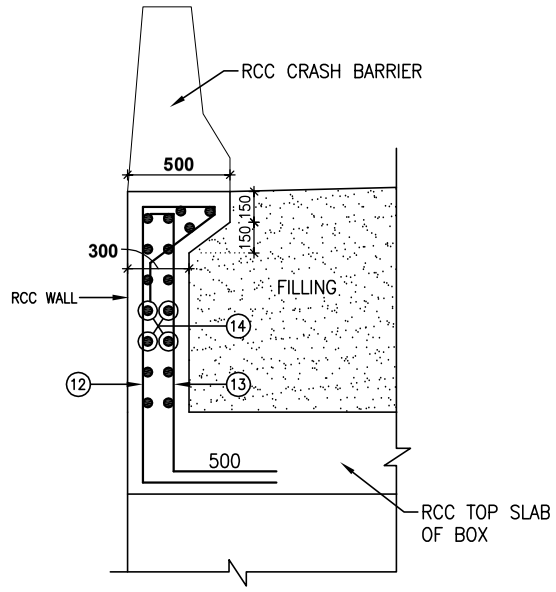

SECTION 2-2
SCALE-1:25

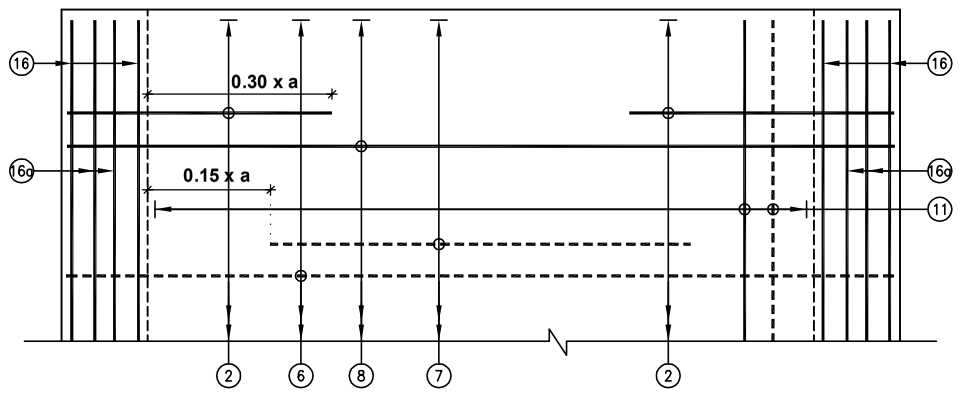

REINFORCEMENT DETAILS PLAN OF TOP SLAB SCALE-1:25
(BAR MARK 5, 16a KERB AND HAUNCH LINE NOT SHOWN IN PLAN)

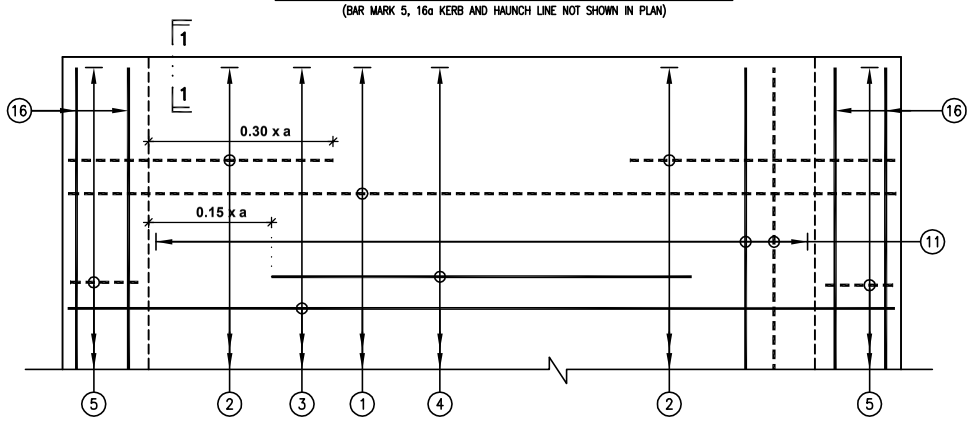

REINFORCEMENT DETAILS PLAN OF BOTTOM SLAB SCALE-1:25
(HAUNCH LINE NOT SHOWN IN PLAN)

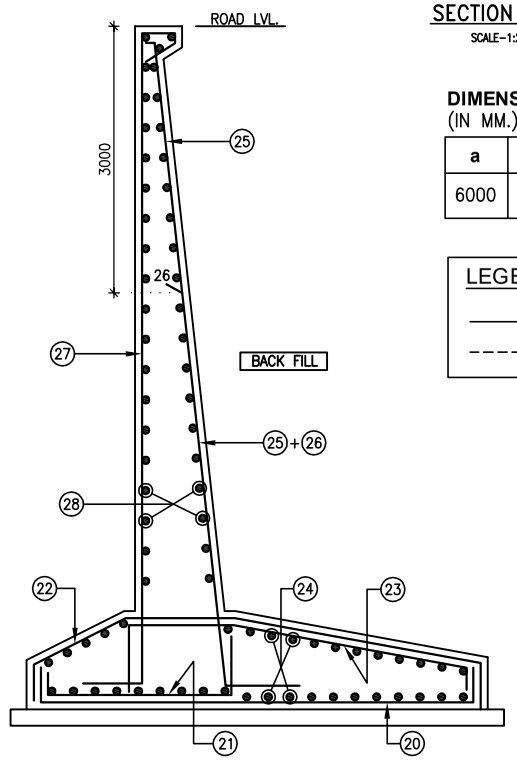

REINF. DETAILS OF RETAINING WALL

DIMENSIONS DETAILS
(IN MM.)

a	b	c	d	e
6000	3500	500	500	550

LEGEND :-

——— TOP FACE BARS / OUTER FACE BAR

- - - - - - BOTTOM FACE BARS / INNER FACE BAR

NOTES:-

(1) ALL DIMENSIONS ARE IN MILLIMETER.
(2) DO NOT SCALE THIS DRAWING FOLLOW ONLY WRITTEN DIMENSIONS.
(3) THIS DRAWING MUST BE READ IN CONJUNCTION WITH ALL OTHER RELEVANT DRAWINGS.
(4) Ø INDICATES TMT Fe:500D REINFORCEMENT AND CONFORMING TO IS: 1786 (INCLUDING LATEST AMMENDMENTS.)
(5) CONCRETE MIX SHALL BE M:40 FOR RCC BOX.
(6) CLEAR COVER TO ANY REINFORCEMENT SHALL BE 75 MM FOR BOTTOM SLAB & WALL AND 50 MM FOR TOP SLAB & RETAINING WALL.
(7) NUMBER OF BAR SHOULD NOT BE COUNTED BUT NUMBER OF BAR AND SPACING INDICATED SHALL BE ADOPTED.
(8) LAP IF REQUIRED SHALL BE 87 x DIA OF BARS.
(9) SCHEDULE OF REINFORCEMENT IS ONLY FOR GUIDANCE AND SHALL BE VARIFIED BEFORE CUTTING / BENDING THE BAR.
(10) DISTRIBUTION REINFORCEMENT SHALL BE SECURELY TIED WITH THE MAIN REINFORCEMENT AT ALL JOINTS.
(11) SUITABLE SUPPORT SYSTEM SHALL BE PROVIDED BETWEEN ROWS OF MAIN BARS TO MAINTAIN THERE CORRECT PLACING.
(12) BACK FILLING BEHIND THE BOX SHALL BE WITH MATERIAL HAVING ø=30° AND C=0 (ZERO).
(13) S.B.C. SHOULD NOT BE LESS THAN 20.00 T/SQ.MT.

SCHEDULE OF REINFORCEMENT (TMT Fe:500D GRADE REIN.)

MK. OF BAR	SHAPE OF BAR	DIA. OF BAR	SPACING IN MM.	LENGTH IN METER	NOS. OF BARS	TOTAL LENGTH IN MT.	WEIGHT /RMT. IN KG.	TOTAL WEIGHT IN KG.
1	1525 6850 1525	16	200	9.900	120	1188.00	1.578	1875
2	2225 4425 2225	20	200	8.875	120x2= 240	2130.00	2.470	5261
3	350 6850 350	20	200	7.550	120	906.00	2.470	2238
4	4200	16	200	4.200	120	504.00	1.578	795
5	200 4425 150	12	100	4.875	240x2= 480	2340.00	0.888	2078
6	300 6850 300	16	200	7.450	120	894.00	1.578	1411
7	4200	16	200	4.200	120	504.00	1.578	796
8	1500 6850 1500	16	200	9.850	120	1182.00	1.578	1865
9	200 845 200	10	200	1.245	120x2= 240	298.80	0.620	185
10	200 845 200	10	200	1.245	120x2= 240	298.80	0.620	185
11	150 23900 150	12	175	24.300	(35+20)x4 =220	5346.00	0.888	4747
12	200 3900 150 50 750	12	100	5.485	70x2= 140	767.9	0.888	682
13	200 3900 550	12	100	4.650	70x2= 140	651.00	0.888	578
14	150 6900 150	8	150	7.200	23x2x2=92	662.40	0.395	262
16	200 23900 200	10	–	24.300	16	388.80	0.620	241
16a	200 23900 200	10	–	24.300	8	194.40	0.620	121
18	1300 1100 45° 1556 200	10	150	4.256	47x2=94	400.064	0.620	248
19	200 6900 200	10	–	7.300	20	146.00	0.620	91
20	275 8850 275	16	150	9.400	73x4=292	2744.80	1.578	4331
21	275 3175 600	20	150	4.050	73x4=292	1182.60	2.470	2921
22	275 2300 950 5700 275	16	150	9.500	73x4=292	2774.00	1.578	4377
23	600 950 5700 275	20	150	7.525	73x4=292	2197.30	2.470	5427
24	11100	12	125	11.100	64x2x4= 512	5683.20	0.888	5047
25	150 9200 350	16	150	9.700	73x4=292	2832.40	1.578	4470
26	150 6200 350	25	150	6.700	73x4=292	1956.40	3.858	7548
27	150 9200 350 400 50	16	150	10.150	73x4=292	2963.80	1.578	4677
28	11100	12	150	11.100	54x2x4= 432	4795.20	0.888	4258
							TOTAL	66715
							ADD.2.5% WASTAGE AND LAP	1668
							TOTAL IN KG.	**68383**

* BAR MK '15' & '17' ARE NOT IN USED.

REV.	DATE	REVISIONS

CLIENT:
NATIONAL HIGHWAYS & INFRASTRUCTURE DEVELOPMENT CORPORATION LTD.
PTI BUILDING, 4 PARLIAMENT STREET
SANSAD MARG AREA, NEW DELHI - 110001

DESIGN CONSULTANT:
ANANDJIWALA INFRA ADVISORY
9, Shivranjani Shopping Center, On 132 Feet Ring Road
Nr. Shivranjani Cross Road, Satellite, Ahmedabad - 380 015
Email: anandjiwalainfra@gmail.com

PROJECT:
CONSULTANCY SERVICES FOR FEASIBILITY STUDY, PREPARATION OF DETAILED PROJECT REPORT AND PROVIDING PRE-CONSTRUCTION SERVICES FOR UPGRADATION OF EXISTING 2 LANE HIGHWAY TO 4 LANE WITH PAVED SHOULDER CONFIGURATION (NH-144A) FROM KM 26.350 (KHATI CHOWK) TO KM 30.097 (HANUMAN CHOWK) OF JAMMU - AKHNOOR SECTION IN THE UNION TERRITORY OF JAMMU & KASHMIR ON EPC BASIS

SCALE AT A3 SIZE DRAWING

TITLE:
REINFORCEMENT DRAWING OF SINGLE CELL BOX CULVERT 6.0x3.50m WITH CUSHION AT CH: 28+362

CLIENT APPROVAL: | SIGNATURE:

DWG NO:-

DRAWN:	CHECKED:	DESIGNED:	APPROVED:
LK	SJ	SC	LA

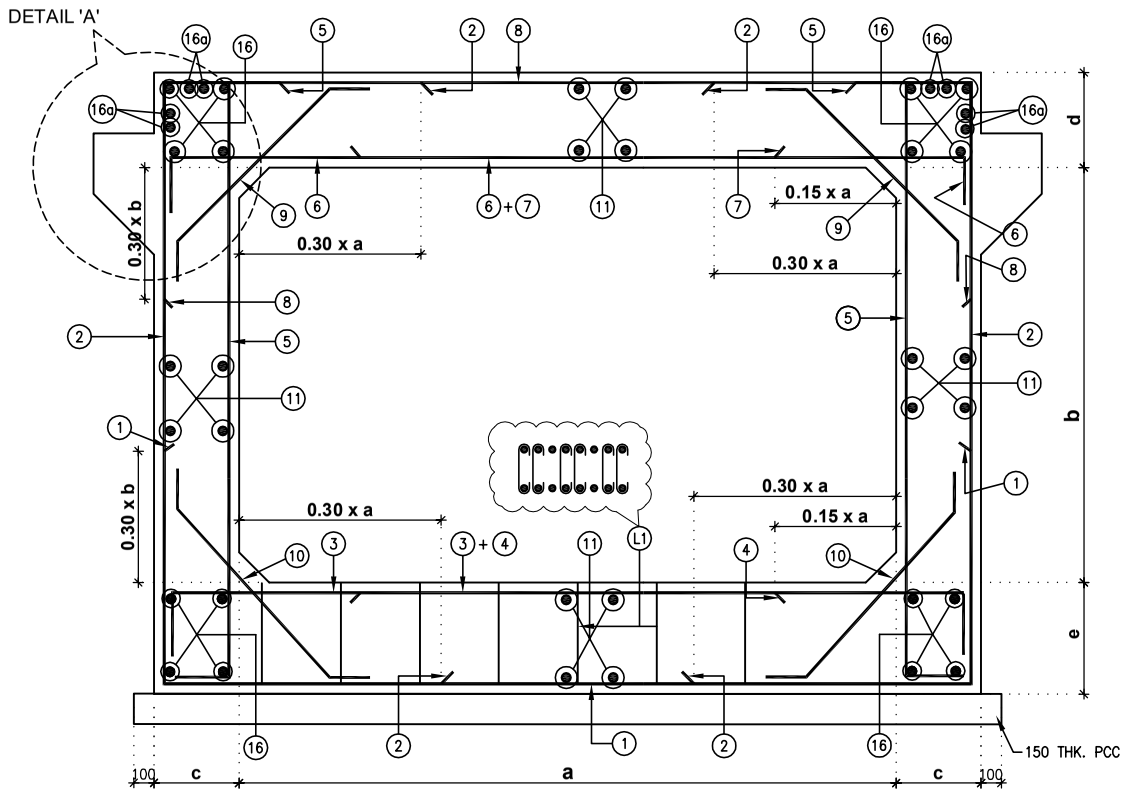

REINFORCEMENT DETAILS OF SINGLE CELL BOX CULVERT
SCALE-1:25

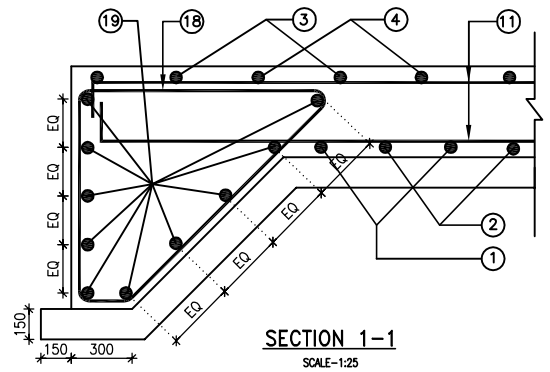

SECTION 1-1
SCALE-1:25

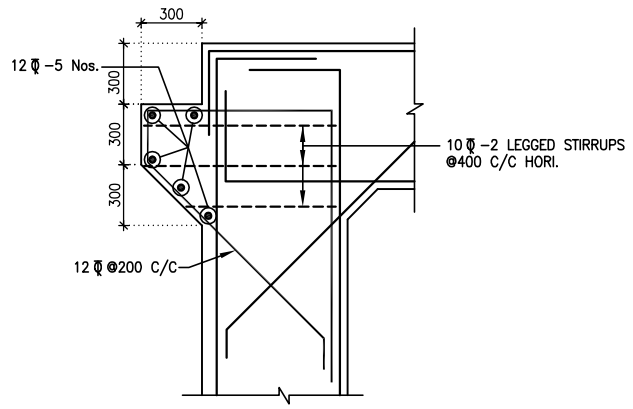

DETAIL AT 'A'
SCALE-1:25
THIS REINF. IS NOT INCLUDED IN BAR BENDING SCHEDULE

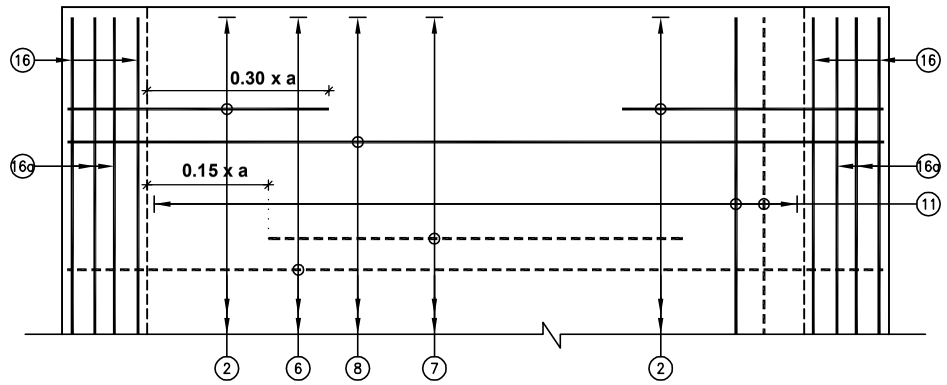

REINFORCEMENT DETAILS PLAN OF TOP SLAB SCALE-1:25
(BAR MARK 5, 16a KERB AND HAUNCH LINE NOT SHOWN IN PLAN)

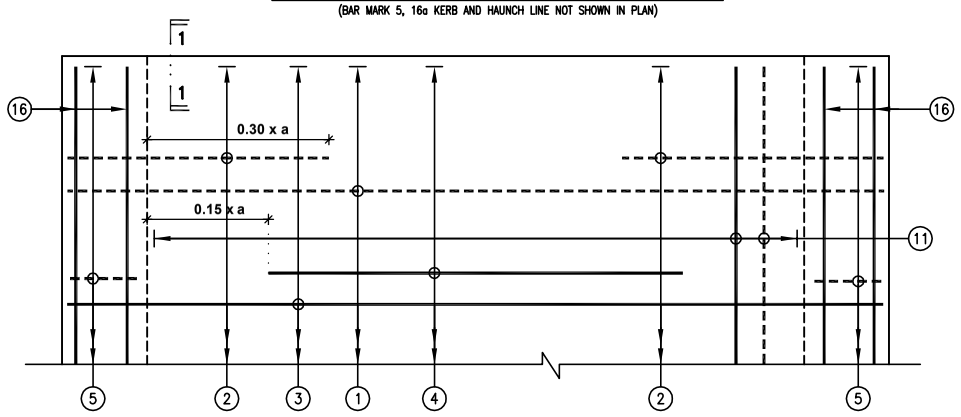

REINFORCEMENT DETAILS PLAN OF BOTTOM SLAB SCALE-1:25
(HAUNCH LINE NOT SHOWN IN PLAN)

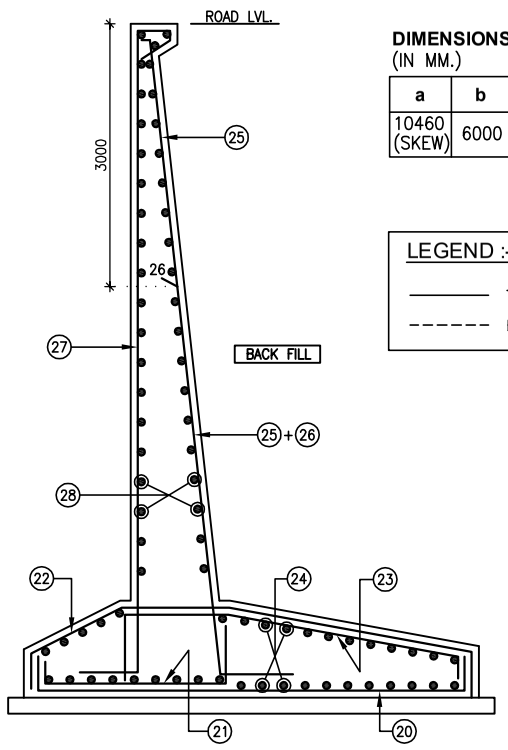

REINF. DETAILS OF RETAINING WALL

DIMENSIONS DETAILS
(IN MM.)

a	b	c	d	e
10460 (SKEW)	6000	700	700	750

LEGEND :-

——— TOP FACE BARS / OUTER FACE BAR

- - - - - - BOTTOM FACE BARS / INNER FACE BAR

SCHEDULE OF REINFORCEMENT (TMT Fe:500 D GRADE REIN.)

MK. OF BAR	SHAPE OF BAR	DIA. OF BAR	SPACING IN MM.	LENGTH IN METER	NOS. OF BARS	TOTAL LENGTH IN MT.	WEIGHT /RMT. IN KG.	TOTAL WEIGHT IN KG.
1	2400, 12402, 2400	20	200	17.202	125	2150.25	2.47	5311
2	4200, 7300, 4200	20	200	15.700	125x2= 250	3925.00	2.47	9695
3	450, 12402, 450	20	200	13.302	125	1662.75	2.47	4107
4	7325	20	200	7.325	125	915.625	2.47	2262
5	200, 7300, 150	16	100	7.650	250x2=500	3825.00	1.578	6036
6	300, 12402, 300	20	200	13.002	125	1625.25	2.47	4015
7	7325	16	200	7.325	125	915.625	1.578	1445
8	2450, 12402, 2450	20	200	17.302	125	2162.75	2.47	5342
9	200, 1380, 200	10	200	1.780	125x2= 250	445.00	0.620	276
10	200, 1380, 200	10	200	1.780	125x2= 250	445.00	0.620	276
11	150, 43440, 150	12	150	43.740	(70+40)x4 =440	19245.6	0.888	17090
16	200, 43440, 200	10	–	43.840	16	701.44	0.620	435
16a	200, 43440, 200	10	–	43.840	8	350.72	0.620	218
18	1100, 84, 200, 1300, 1506, 75	10	150	4.256	70x2=140	595.84	0.620	370
L1	600	8	300	0.750	84x35=2940	2205.00	0.395	871
19	200, 10360, 200	10	--	10.760	20	215.20	0.620	133
20	225, 7650, 225	16	200	8.100	49x4=196	1587.60	1.578	2505
21	225, 3150, 500	25	200	3.875	49x4=196	759.500	3.858	2930
22	225, 2300, 900, 4600, 225	16	200	8.250	49x4=196	1617.00	1.578	2552
23	500, 900, 4600, 225	25	200	6.225	49x4=196	1220.10	3.858	4707
24	150, 9700	12	150	9.700	46x2x4= 368	3569.6	0.888	3170
25	8000, 350, 150	16	200	8.500	49x4=196	1666.00	1.578	2629
26	150, 5000, 350	20	200	5.500	49x4=196	1078.00	2.470	2663
27	150, 8000, 50, 400, 350	16	200	8.950	49x4=196	1754.20	1.578	2768
28	9700	12	200	9.700	53x2x4= 424	4112.80	0.888	3652
						TOTAL		85458
						ADD 2.5% WASTAGE AND LAP		2136
						TOTAL IN KG.		**87594**

* BAR MK '12', '13', '14', '15' & '17' ARE NOT IN USED.

NOTES:-

(1) ALL DIMENSIONS ARE IN MILLIMETER.
(2) DO NOT SCALE THIS DRAWING FOLLOW ONLY WRITTEN DIMENSIONS.
(3) THIS DRAWING MUST BE READ IN CONJUNCTION WITH ALL OTHER RELEVANT DRAWINGS.
(4) ϕ INDICATES TMT Fe:500 D REINFORCEMENT AND CONFORMING TO IS: 1786 (INCLUDING LATEST AMMENDMENTS.)
(5) CONCRETE MIX SHALL BE M:40 FOR RCC BOX & RETAINING WALL.
(6) CLEAR COVER TO ANY REINFORCEMENT SHALL BE 75 MM FOR BOTTOM SLAB & WALL AND 50 MM FOR TOP SLAB & RETAINING WALL.
(7) NUMBER OF BAR SHOULD NOT BE COUNTED BUT NUMBER OF BAR AND SPACING INDICATED SHALL BE ADOPTED.
(8) LAP IF REQUIRED SHALL BE 87 x DIA. OF BARS.
(9) SCHEDULE OF REINFORCEMENT IS ONLY FOR GUIDANCE AND SHALL BE VARIFIED BEFORE CUTTING / BENDING THE BAR.
(10) DISTRIBUTION REINFORCEMENT SHALL BE SECURELY TIED WITH THE MAIN REINFORCEMENT AT ALL JOINTS.
(11) SUITABLE SUPPORT SYSTEM SHALL BE PROVIDED BETWEEN ROWS OF MAIN BARS TO MAINTAIN THERE CORRECT PLACING.
(12) BACK FILLING BEHIND THE BOX SHALL BE WITH MATERIAL HAVING ϕ=30° AND C=0 (ZERO).
(13) NET & GROSS S.B.C. SHOULD NOT BE LESS THAN 16.00 & 20.00 T/SQ.MT.

REV.	DATE	REVISIONS

CLIENT:
NATIONAL HIGHWAYS & INFRASTRUCTURE DEVELOPMENT CORPORATION LTD.
PTI BUILDING, 4 PARLIAMENT STREET
SANSAD MARG AREA, NEW DELHI - 110001

DESIGN CONSULTANT:
ANANDJIWALA INFRA ADVISORY
9, Shivranjani Shopping Center, On 132 Feet Ring Road
Nr. Shivranjani Cross Road, Satellite, Ahmedabad - 380 015
Email: anandjiwalainfra@gmail.com

PROJECT:
CONSULTANCY SERVICES FOR FEASIBILITY STUDY, PREPARATION OF DETAILED PROJECT REPORT AND PROVIDING PRE-CONSTRUCTION SERVICES FOR UPGRADATION OF EXISTING 2 LANE HIGHWAY TO 4 LANE WITH PAVED SHOULDER CONFIGURATION (NH-144A) FROM KM 26.350 (KHATI CHOWK) TO KM 30.097 (HANUMAN CHOWK) OF JAMMU - AKHNOOR SECTION IN THE UNION TERRITORY OF JAMMU & KASHMIR ON EPC BASIS

SCALE AT A3 SIZE DRAWING

TITLE:
REINFORCEMENT DRAWING OF SINGLE CELL BOX CULVERT 6.0x6.0 m WITHOUT CUSHION AT CH: 28+586

CLIENT APPROVAL:	SIGNATURE:		
DWG NO:-			
DRAWN: LK	CHECKED: SJ	DESIGNED: SC	APPROVED: LA

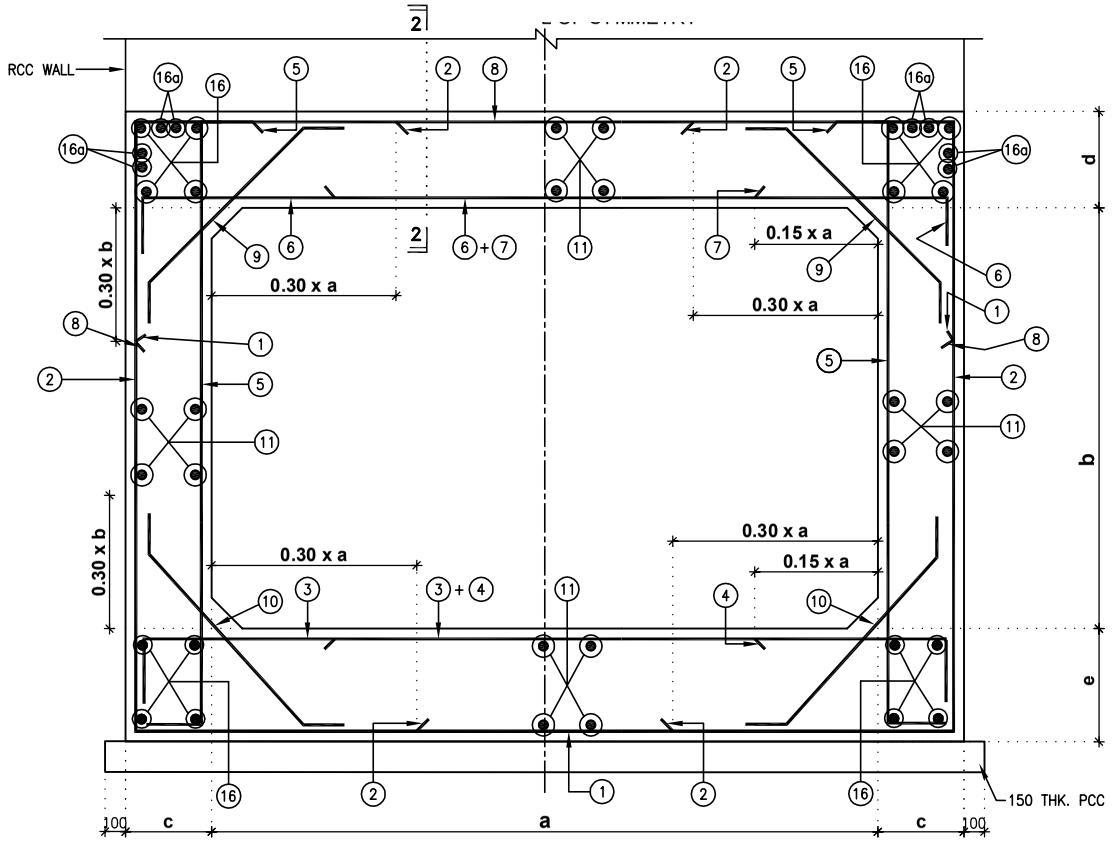

REINFORCEMENT DETAILS OF SINGLE CELL BOX CULVERT
SCALE-1:25

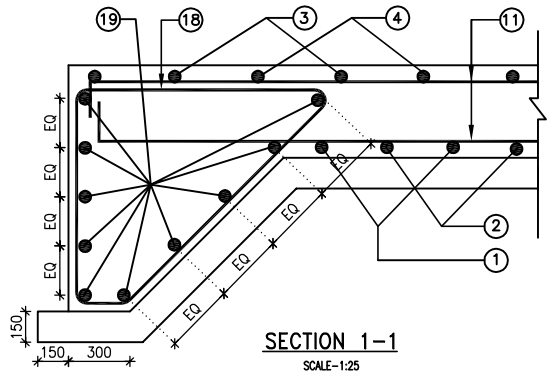

SECTION 1-1
SCALE-1:25

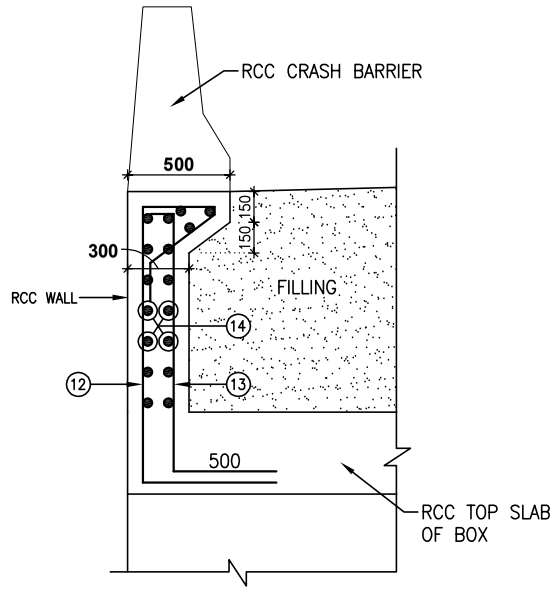

SECTION 2-2
SCALE-1:25

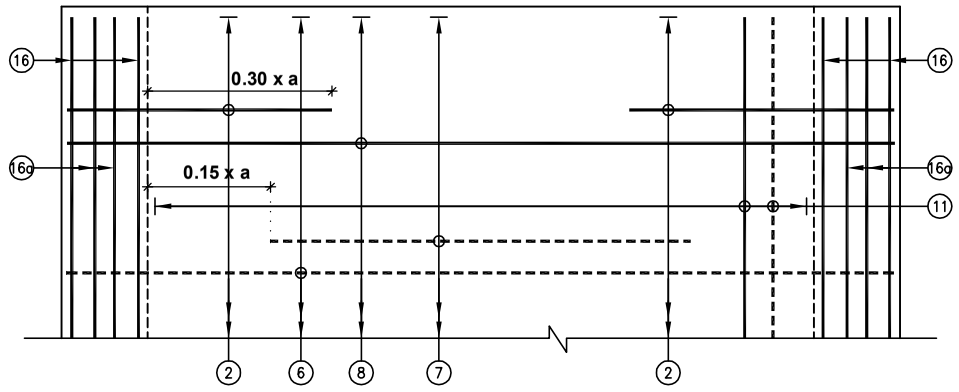

REINFORCEMENT DETAILS PLAN OF TOP SLAB SCALE-1:25
(BAR MARK 5, 16a KERB AND HAUNCH LINE NOT SHOWN IN PLAN)

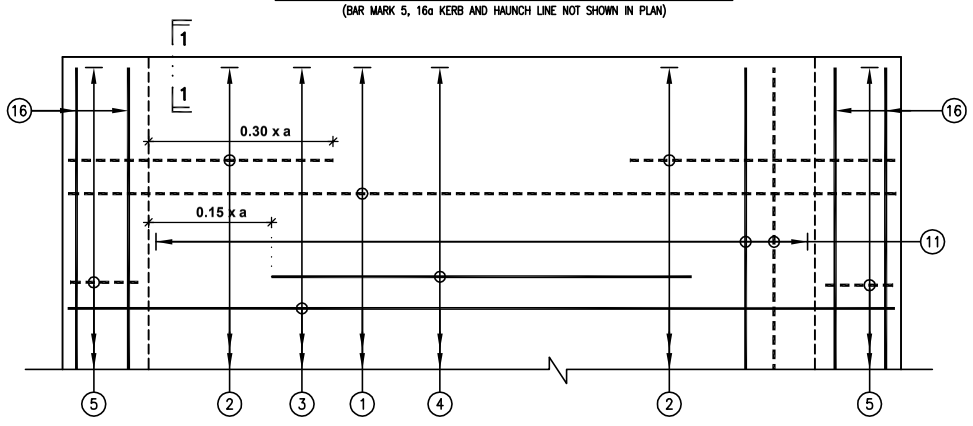

REINFORCEMENT DETAILS PLAN OF BOTTOM SLAB SCALE-1:25
(HAUNCH LINE NOT SHOWN IN PLAN)

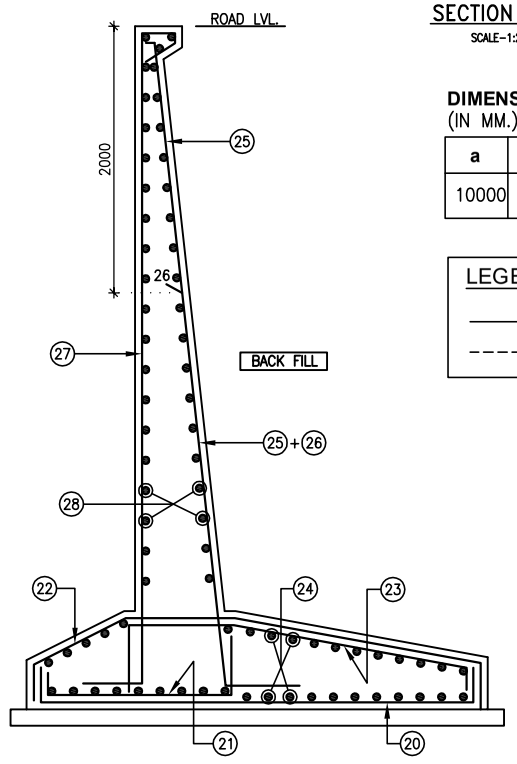

REINF. DETAILS OF RETAINING WALL

DIMENSIONS DETAILS
(IN MM.)

a	b	c	d	e
10000	4500	550	550	600

LEGEND :-

——— TOP FACE BARS / OUTER FACE BAR

- - - - - - BOTTOM FACE BARS / INNER FACE BAR

NOTES:-

(1) ALL DIMENSIONS ARE IN MILLIMETER.
(2) DO NOT SCALE THIS DRAWING FOLLOW ONLY WRITTEN DIMENSIONS.
(3) THIS DRAWING MUST BE READ IN CONJUNCTION WITH ALL OTHER RELEVANT DRAWINGS.
(4) Ø INDICATES TMT Fe:500D REINFORCEMENT AND CONFORMING TO IS: 1786 (INCLUDING LATEST AMMENDMENTS.)
(5) CONCRETE MIX SHALL BE M:40 FOR RCC BOX.
(6) CLEAR COVER TO ANY REINFORCEMENT SHALL BE 75 MM FOR BOTTOM SLAB & WALL AND 50 MM FOR TOP SLAB & RETAINING WALL.
(7) NUMBER OF BAR SHOULD NOT BE COUNTED BUT NUMBER OF BAR AND SPACING INDICATED SHALL BE ADOPTED.
(8) LAP IF REQUIRED SHALL BE 87 x DIA OF BARS.
(9) SCHEDULE OF REINFORCEMENT IS ONLY FOR GUIDANCE AND SHALL BE VARIFIED BEFORE CUTTING / BENDING THE BAR.
(10) DISTRIBUTION REINFORCEMENT SHALL BE SECURELY TIED WITH THE MAIN REINFORCEMENT AT ALL JOINTS.
(11) SUITABLE SUPPORT SYSTEM SHALL BE PROVIDED BETWEEN ROWS OF MAIN BARS TO MAINTAIN THERE CORRECT PLACING.
(12) BACK FILLING BEHIND THE BOX SHALL BE WITH MATERIAL HAVING ø=30° AND C=0 (ZERO).
(13) S.B.C. SHOULD NOT BE LESS THAN 20.00 T/SQ.MT.

SCHEDULE OF REINFORCEMENT (TMT Fe:500D GRADE REIN.)

MK. OF BAR	SHAPE OF BAR	DIA. OF BAR	SPACING IN MM.	LENGTH IN METER	NOS. OF BARS	TOTAL LENGTH IN MT.	WEIGHT /RMT. IN KG.	TOTAL WEIGHT IN KG.
1	1875, 10950, 1875	20	200	14.700	120	1764.00	2.470	4357
2	3475, 5525, 3475	20	200	12.475	120x2= 240	2994.00	2.470	7395
3	350, 10950, 350	20	200	11.650	120	1398.00	2.470	3453
4	7000	20	200	7.000	120	840.00	2.470	2075
5	200, 5525, 150	12	100	5.875	240x2= 480	2820.00	0.888	2504
6	300, 10950, 300	20	200	11.550	120	1386.00	2.470	3423
7	7000	20	200	7.000	120	840.00	2.470	2075
8	1850, 10950, 1850	20	200	14.650	120	1758.00	2.470	4342
9	200, 845, 200	10	200	1.245	120x2= 240	298.80	0.620	185
10	200, 845, 200	10	200	1.245	120x2= 240	298.80	0.620	185
11	150, 23900, 150	12	175	24.300	(57+26)x4 =332	8067.60	0.888	7164
12	200, 50, 50, 150, 1400, 750	10	150	2.985	73x2= 146	435.81	0.620	270
13	200, 1400, 550	10	150	2.150	73x2= 146	313.90	0.620	195
14	150, 9850, 150	8	200	10.150	4x2x2=16	162.40	0.395	64
16	200, 23900, 200	10	–	24.300	16	388.80	0.620	241
16a	200, 23900, 200	10	–	24.300	8	194.40	0.620	121
18	1300, 45°, 1100, 1556, 200	10	150	4.256	73x2=146	621.38	0.620	385
19	200, 10000, 200	10	–	10.400	20	208.00	0.620	129
20	275, 6850, 275	16	200	7.400	43x4=172	1272.80	1.578	2009
21	275, 2925, 600	20	200	3.800	43x4=172	653.60	2.470	1614
22	275, 2200, 800, 4000, 275	16	200	7.550	43x4=172	1298.60	1.578	2050
23	600, 800, 4000, 275	20	200	5.675	43x4=172	976.10	2.470	2411
24	8500	12	150	8.500	41x2x4= 328	2788.00	0.888	2476
25	150, 7600, 350	16	200	8.100	43x4=172	1393.20	1.578	2199
26	150, 5600, 350	25	200	6.100	43x4=172	1049.20	3.858	4048
27	150, 7600, 350, 400, 50	16	200	8.550	43x4=172	1470.60	1.578	2321
28	8500	12	150	8.500	47x2x4= 376	3196.00	0.888	2838
						TOTAL		60529
						ADD.2.5% WASTAGE AND LAP		1514
						TOTAL IN KG.		**62043**

* BAR MK '15' & '17' ARE NOT IN USED.

REV.	DATE	REVISIONS

CLIENT:
NATIONAL HIGHWAYS & INFRASTRUCTURE DEVELOPMENT CORPORATION LTD.
PTI BUILDING, 4 PARLIAMENT STREET
SANSAD MARG AREA, NEW DELHI - 110001

DESIGN CONSULTANT:
ANANDJIWALA INFRA ADVISORY
9, Shivranjani Shopping Center, On 132 Feet Ring Road
Nr. Shivranjani Cross Road, Satellite, Ahmedabad - 380 015
Email: anandjiwalainfra@gmail.com

PROJECT:
CONSULTANCY SERVICES FOR FEASIBILITY STUDY, PREPARATION OF DETAILED PROJECT REPORT AND PROVIDING PRE-CONSTRUCTION SERVICES FOR UPGRADATION OF EXISTING 2 LANE HIGHWAY TO 4 LANE WITH PAVED SHOULDER CONFIGURATION (NH-144A) FROM KM 26.350 (KHATI CHOWK) TO KM 30.097 (HANUMAN CHOWK) OF JAMMU - AKHNOOR SECTION IN THE UNION TERRITORY OF JAMMU & KASHMIR ON EPC BASIS

SCALE AT A3 SIZE DRAWING

TITLE:
REINFORCEMENT DRAWING OF SINGLE CELL LVUP 10.0x4.50m WITH CUSHION AT CH: 28+680

CLIENT APPROVAL: | SIGNATURE:

DWG NO:-

DRAWN:	CHECKED:	DESIGNED:	APPROVED:
LK	SJ	SC	LA

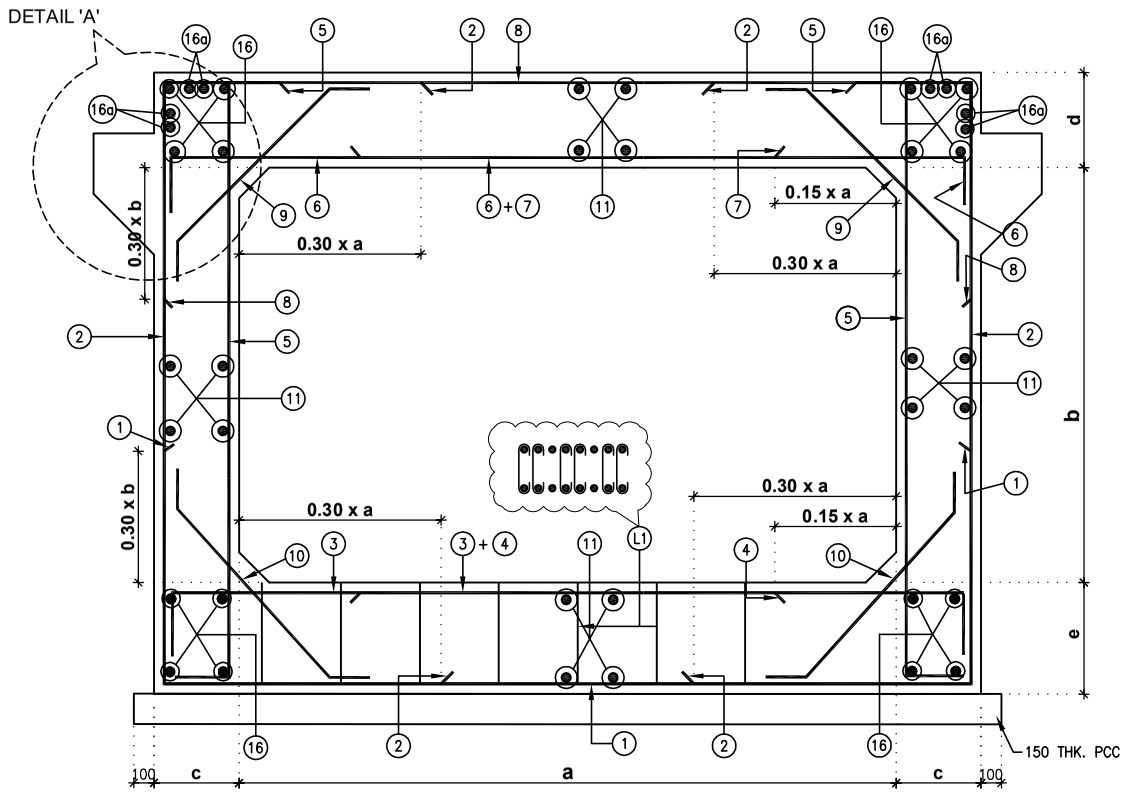

REINFORCEMENT DETAILS OF SINGLE CELL BOX CULVERT
SCALE-1:25

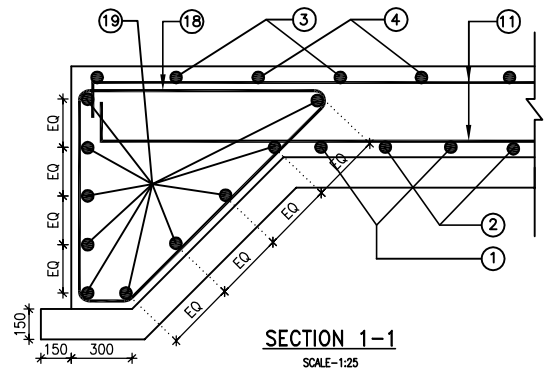

SECTION 1-1
SCALE-1:25

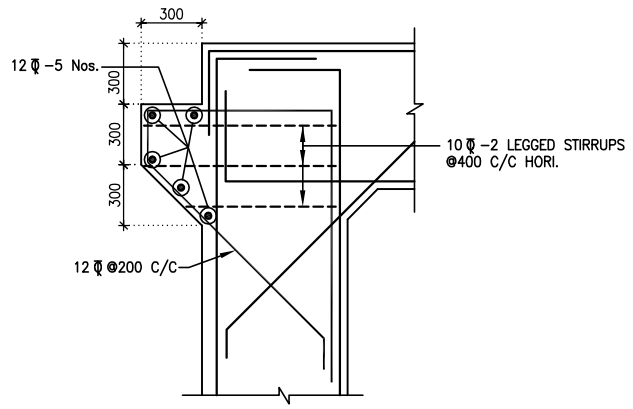

DETAIL AT 'A'
SCALE-1:25
THIS REINF. IS NOT INCLUDED IN BAR BENDING SCHEDULE

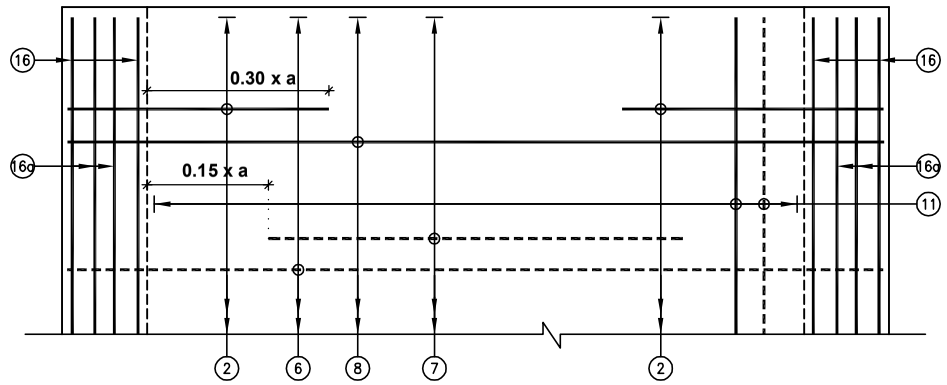

REINFORCEMENT DETAILS PLAN OF TOP SLAB SCALE-1:25
(BAR MARK 5, 16a KERB AND HAUNCH LINE NOT SHOWN IN PLAN)

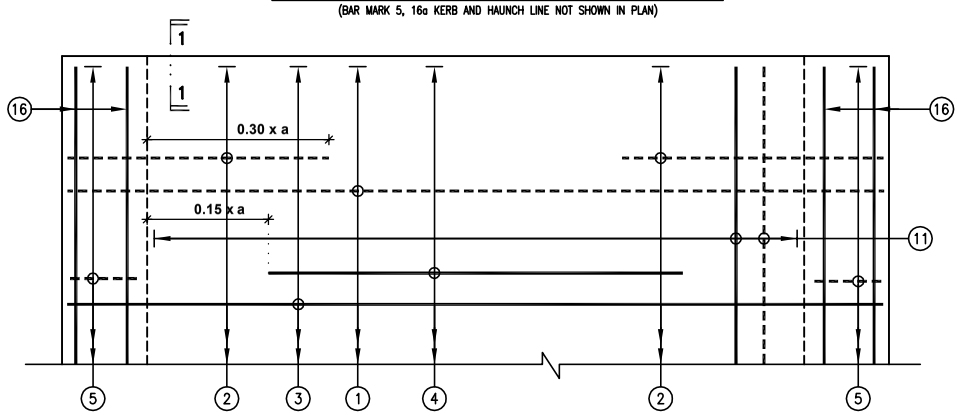

REINFORCEMENT DETAILS PLAN OF BOTTOM SLAB SCALE-1:25
(HAUNCH LINE NOT SHOWN IN PLAN)

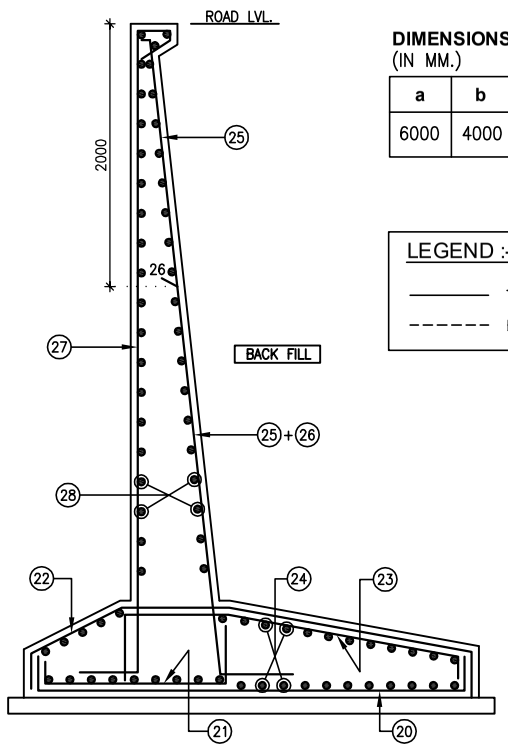

REINF. DETAILS OF RETAINING WALL

DIMENSIONS DETAILS
(IN MM.)

a	b	c	d	e
6000	4000	500	500	550

LEGEND :-

——— TOP FACE BARS / OUTER FACE BAR

- - - - - - BOTTOM FACE BARS / INNER FACE BAR

SCHEDULE OF REINFORCEMENT (TMT Fe:500 D GRADE REIN.)

MK. OF BAR	SHAPE OF BAR	DIA. OF BAR	SPACING IN MM.	LENGTH IN METER	NOS. OF BARS	TOTAL LENGTH IN MT.	WEIGHT /RMT. IN KG.	TOTAL WEIGHT IN KG.
1	1675, 6850, 1675	16	200	10.200	120	1224.00	1.578	1932
2	2225, 4925, 2225	16	200	9.375	120x2= 240	2250.00	1.578	3551
3	450, 6850, 450	16	200	7.750	120	930.00	1.578	1468
4	4200	16	200	4.200	120	504.00	1.578	795
5	200, 4925, 150	12	100	5.275	240x2=480	2532.00	0.888	2248
6	300, 6850, 300	16	200	7.450	120	894.00	1.578	1411
7	4200	16	200	4.200	120	504.00	1.578	795
8	1650, 6850, 1650	16	200	10.150	120	1218.00	1.578	1922
9	200, 1380, 200	10	200	1.780	121x2= 242	430.76	0.620	267
10	200, 1380, 200	10	200	1.780	121x2= 242	430.76	0.620	267
11	150, 23900, 150	10	150	24.200	(40+27)x4 =268	6485.60	0.62	4021
16	200, 23900, 200	10	–	24.200	16	387.20	0.620	240
16a	200, 23900, 200	10	–	24.200	8	193.60	0.620	120
18	1100, 200, 1300, 1556, 75	10	150	4.256	47x2=94	400.06	0.620	248
L1	400	8	300	0.550	80x20=1600	880.00	0.395	348
19	200, 6900, 200	10	--	7.300	20	146.00	0.620	91
20	225, 5050, 225	16	200	5.500	31x4=124	682.00	1.578	1076
21	225, 2075, 500	16	200	2.800	31x4=124	347.20	1.578	547
22	225, 1460, 650, 3000, 225	16	200	5.560	31x4=124	689.44	1.578	1088
23	500, 650, 3000, 225	16	200	4.375	31x4=124	542.50	1.578	856
24	150, 6200	12	200	6.200	23x2x4= 184	1140.80	0.888	1013
25	6150, 350, 150	16	200	6.650	31x4=124	824.6	1.578	1301
26	150, 4150, 350	20	200	4.650	31x4=124	576.60	2.470	1424
27	150, 6150, 350, 50, 400	16	200	7.100	31x4=124	880.40	1.578	1389
28	6200	12	200	6.200	28x2x4= 224	1388.80	0.888	1233
						TOTAL		29651
						ADD 2.5% WASTAGE AND LAP		741
						TOTAL IN KG.		**30392**

* BAR MK '12', '13', '14', '15' & '17' ARE NOT IN USED.

NOTES:-

(1) ALL DIMENSIONS ARE IN MILLIMETER.
(2) DO NOT SCALE THIS DRAWING FOLLOW ONLY WRITTEN DIMENSIONS.
(3) THIS DRAWING MUST BE READ IN CONJUNCTION WITH ALL OTHER RELEVANT DRAWINGS.
(4) ϕ INDICATES TMT Fe:500 D REINFORCEMENT AND CONFORMING TO IS: 1786 (INCLUDING LATEST AMMENDMENTS.)
(5) CONCRETE MIX SHALL BE M:40 FOR RCC BOX & RETAINING WALL.
(6) CLEAR COVER TO ANY REINFORCEMENT SHALL BE 75 MM FOR BOTTOM SLAB & WALL AND 50 MM FOR TOP SLAB & RETAINING WALL.
(7) NUMBER OF BAR SHOULD NOT BE COUNTED BUT NUMBER OF BAR AND SPACING INDICATED SHALL BE ADOPTED.
(8) LAP IF REQUIRED SHALL BE 87 x DIA. OF BARS.
(9) SCHEDULE OF REINFORCEMENT IS ONLY FOR GUIDANCE AND SHALL BE VARIFIED BEFORE CUTTING / BENDING THE BAR.
(10) DISTRIBUTION REINFORCEMENT SHALL BE SECURELY TIED WITH THE MAIN REINFORCEMENT AT ALL JOINTS.
(11) SUITABLE SUPPORT SYSTEM SHALL BE PROVIDED BETWEEN ROWS OF MAIN BARS TO MAINTAIN THERE CORRECT PLACING.
(12) BACK FILLING BEHIND THE BOX SHALL BE WITH MATERIAL HAVING ϕ=30° AND C=0 (ZERO).
(13) NET & GROSS S.B.C. SHOULD NOT BE LESS THAN 15.00 & 19.00 T/SQ.MT.

REV.	DATE	REVISIONS

CLIENT:
NATIONAL HIGHWAYS & INFRASTRUCTURE DEVELOPMENT CORPORATION LTD.
PTI BUILDING, 4 PARLIAMENT STREET
SANSAD MARG AREA, NEW DELHI - 110001

DESIGN CONSULTANT:
ANANDJIWALA INFRA ADVISORY
9, Shivranjani Shopping Center, On 132 Feet Ring Road
Nr. Shivranjani Cross Road, Satellite, Ahmedabad - 380 015
Email: anandjiwalainfra@gmail.com

PROJECT:
CONSULTANCY SERVICES FOR FEASIBILITY STUDY, PREPARATION OF DETAILED PROJECT REPORT AND PROVIDING PRE-CONSTRUCTION SERVICES FOR UPGRADATION OF EXISTING 2 LANE HIGHWAY TO 4 LANE WITH PAVED SHOULDER CONFIGURATION (NH-144A) FROM KM 26.350 (KHATI CHOWK) TO KM 30.097 (HANUMAN CHOWK) OF JAMMU - AKHNOOR SECTION IN THE UNION TERRITORY OF JAMMU & KASHMIR ON EPC BASIS

SCALE AT A3 SIZE DRAWING

TITLE:
REINFORCEMENT DRAWING OF SINGLE CELL BOX CULVERT 6.0x4.0 m WITHOUT CUSHION AT CH: 29+025

CLIENT APPROVAL:	SIGNATURE:

DWG NO:-

DRAWN:	CHECKED:	DESIGNED:	APPROVED:
LK	SJ	SC	LA

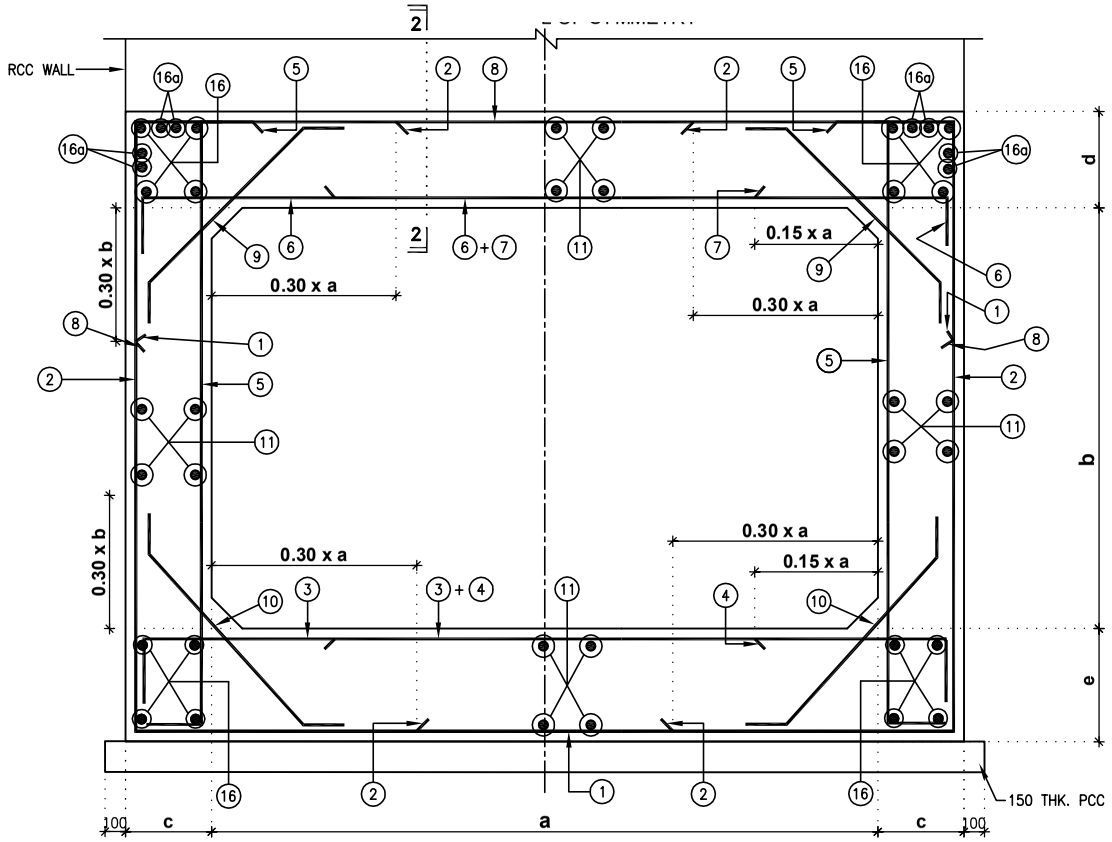

REINFORCEMENT DETAILS OF SINGLE CELL BOX CULVERT
SCALE-1:25

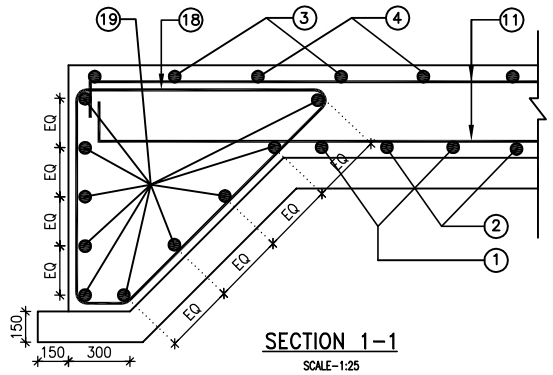

SECTION 1-1
SCALE-1:25

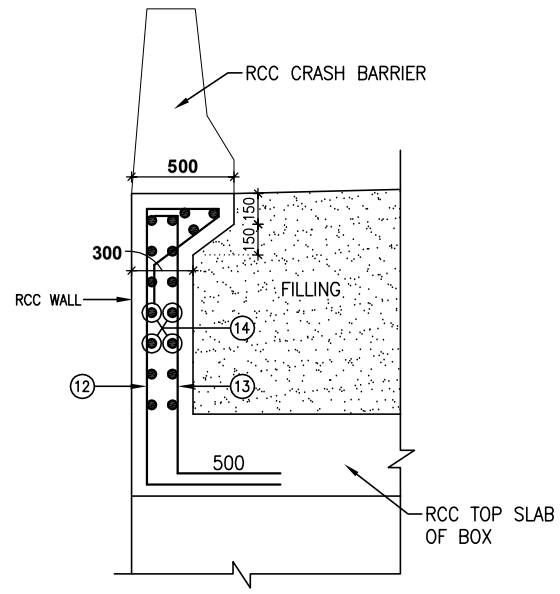

SECTION 2-2
SCALE-1:25

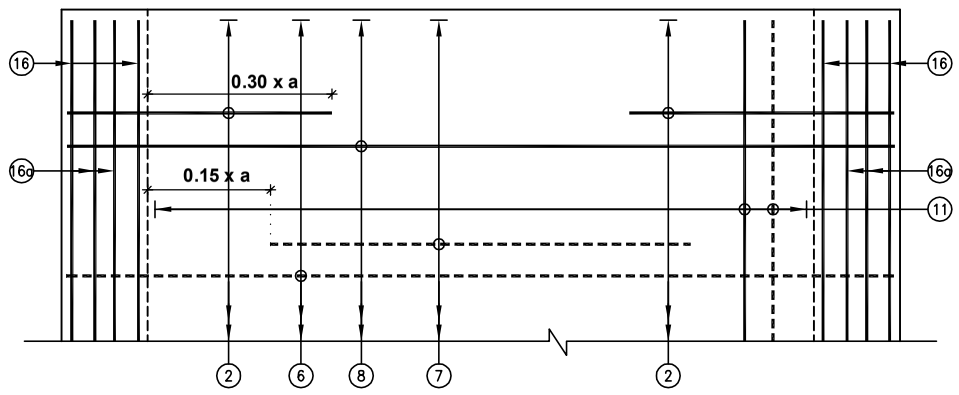

REINFORCEMENT DETAILS PLAN OF TOP SLAB SCALE-1:25
(BAR MARK 5, 16a KERB AND HAUNCH LINE NOT SHOWN IN PLAN)

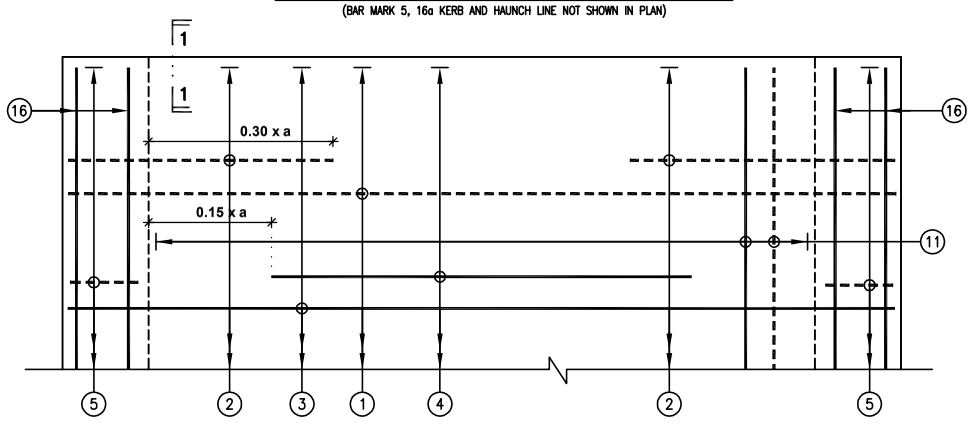

REINFORCEMENT DETAILS PLAN OF BOTTOM SLAB SCALE-1:25
(HAUNCH LINE NOT SHOWN IN PLAN)

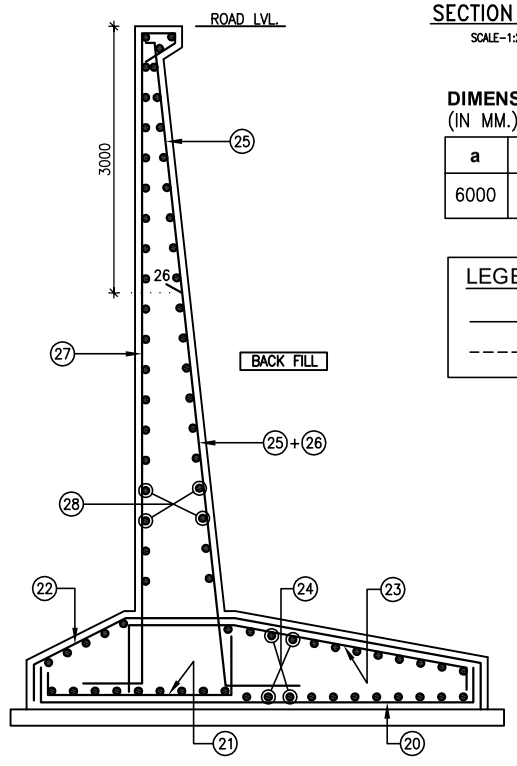

REINF. DETAILS OF RETAINING WALL

DIMENSIONS DETAILS
(IN MM.)

a	b	c	d	e
6000	3500	500	500	550

LEGEND :-

——— TOP FACE BARS / OUTER FACE BAR

- - - - - - BOTTOM FACE BARS / INNER FACE BAR

NOTES:-

(1) ALL DIMENSIONS ARE IN MILLIMETER.
(2) DO NOT SCALE THIS DRAWING FOLLOW ONLY WRITTEN DIMENSIONS.
(3) THIS DRAWING MUST BE READ IN CONJUNCTION WITH ALL OTHER RELEVANT DRAWINGS.
(4) Ø INDICATES TMT Fe:500D REINFORCEMENT AND CONFORMING TO IS: 1786 (INCLUDING LATEST AMMENDMENTS.)
(5) CONCRETE MIX SHALL BE M:40 FOR RCC BOX.
(6) CLEAR COVER TO ANY REINFORCEMENT SHALL BE 75 MM FOR BOTTOM SLAB & WALL AND 50 MM FOR TOP SLAB & RETAINING WALL.
(7) NUMBER OF BAR SHOULD NOT BE COUNTED BUT NUMBER OF BAR AND SPACING INDICATED SHALL BE ADOPTED.
(8) LAP IF REQUIRED SHALL BE 87 x DIA OF BARS.
(9) SCHEDULE OF REINFORCEMENT IS ONLY FOR GUIDANCE AND SHALL BE VARIFIED BEFORE CUTTING / BENDING THE BAR.
(10) DISTRIBUTION REINFORCEMENT SHALL BE SECURELY TIED WITH THE MAIN REINFORCEMENT AT ALL JOINTS.
(11) SUITABLE SUPPORT SYSTEM SHALL BE PROVIDED BETWEEN ROWS OF MAIN BARS TO MAINTAIN THERE CORRECT PLACING.
(12) BACK FILLING BEHIND THE BOX SHALL BE WITH MATERIAL HAVING ø=30° AND C=0 (ZERO).
(13) S.B.C. SHOULD NOT BE LESS THAN 20.00 T/SQ.MT.

SCHEDULE OF REINFORCEMENT (TMT Fe:500D GRADE REIN.)

MK. OF BAR	SHAPE OF BAR	DIA. OF BAR	SPACING IN MM.	LENGTH IN METER	NOS. OF BARS	TOTAL LENGTH IN MT.	WEIGHT /RMT. IN KG.	TOTAL WEIGHT IN KG.
1	1525 6850 1525	16	200	9.900	120	1188.00	1.578	1875
2	2225 4425 2225	20	200	8.875	120x2= 240	2130.00	2.470	5261
3	350 6850 350	20	200	7.550	120	906.00	2.470	2238
4	4200	16	200	4.200	120	504.00	1.578	795
5	200 4425 150	12	100	4.875	240x2= 480	2340.00	0.888	2078
6	300 6850 300	16	200	7.450	120	894.00	1.578	1411
7	4200	16	200	4.200	120	504.00	1.578	796
8	1500 6850 1500	16	200	9.850	120	1182.00	1.578	1865
9	200 845 200	10	200	1.245	120x2= 240	298.80	0.620	185
10	200 845 200 200	10	200	1.245	120x2= 240	298.80	0.620	185
11	150 23900 150	12	175	24.300	(35+20)x4 =220	5346.00	0.888	4747
12	200 3900 150 50 750	12	100	5.485	70x2= 140	767.9	0.888	682
13	200 3900 550	12	100	4.650	70x2= 140	651.00	0.888	578
14	150 6900 150	8	150	7.200	23x2x2=92	662.40	0.395	262
16	200 23900 200	10	–	24.300	16	388.80	0.620	241
16a	200 23900 200	10	–	24.300	8	194.40	0.620	121
18	1300 1100 45° 1556 200	10	150	4.256	47x2=94	400.064	0.620	248
19	200 6900 200	10	–	7.300	20	146.00	0.620	91
20	275 8850 275	16	150	9.400	73x4=292	2744.80	1.578	4331
21	275 3175 600	20	150	4.050	73x4=292	1182.60	2.470	2921
22	275 2300 950 5700 275	16	150	9.500	73x4=292	2774.00	1.578	4377
23	600 950 5700 275	20	150	7.525	73x4=292	2197.30	2.470	5427
24	11100	12	125	11.100	64x2x4= 512	5683.20	0.888	5047
25	150 9200 350	16	150	9.700	73x4=292	2832.40	1.578	4470
26	150 6200 350	25	150	6.700	73x4=292	1956.40	3.858	7548
27	150 9200 350 400 50	16	150	10.150	73x4=292	2963.80	1.578	4677
28	11100	12	150	11.100	54x2x4= 432	4795.20	0.888	4258

* BAR MK '15' & '17' ARE NOT IN USED.

TOTAL	66715
ADD.2.5% WASTAGE AND LAP	1668
TOTAL IN KG.	**68383**

REV.	DATE	REVISIONS

CLIENT:
NATIONAL HIGHWAYS & INFRASTRUCTURE DEVELOPMENT CORPORATION LTD.
PTI BUILDING, 4 PARLIAMENT STREET
SANSAD MARG AREA, NEW DELHI - 110001

DESIGN CONSULTANT:
ANANDJIWALA INFRA ADVISORY
9, Shivranjani Shopping Center, On 132 Feet Ring Road
Nr. Shivranjani Cross Road, Satellite, Ahmedabad - 380 015
Email: anandjiwalainfra@gmail.com

PROJECT:
CONSULTANCY SERVICES FOR FEASIBILITY STUDY, PREPARATION OF DETAILED PROJECT REPORT AND PROVIDING PRE-CONSTRUCTION SERVICES FOR UPGRADATION OF EXISTING 2 LANE HIGHWAY TO 4 LANE WITH PAVED SHOULDER CONFIGURATION (NH-144A) FROM KM 26.350 (KHATI CHOWK) TO KM 30.097 (HANUMAN CHOWK) OF JAMMU - AKHNOOR SECTION IN THE UNION TERRITORY OF JAMMU & KASHMIR ON EPC BASIS

SCALE AT A3 SIZE DRAWING

TITLE:
REINFORCEMENT DRAWING OF SINGLE CELL BOX CULVERT 6.0x3.50m WITH CUSHION AT CH: 29+327

CLIENT APPROVAL: | SIGNATURE:

DWG NO:-

DRAWN:	CHECKED:	DESIGNED:	APPROVED:
LK	SJ	SC	LA

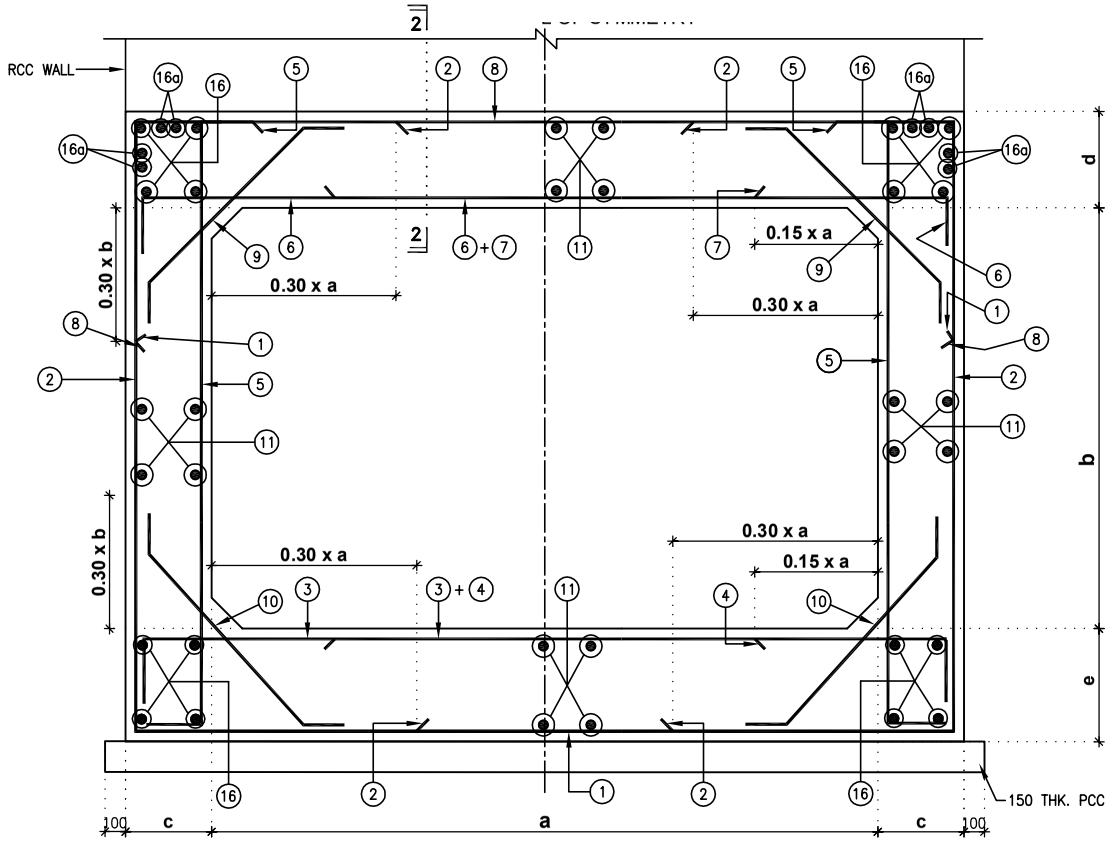

REINFORCEMENT DETAILS OF SINGLE CELL BOX CULVERT
SCALE-1:25

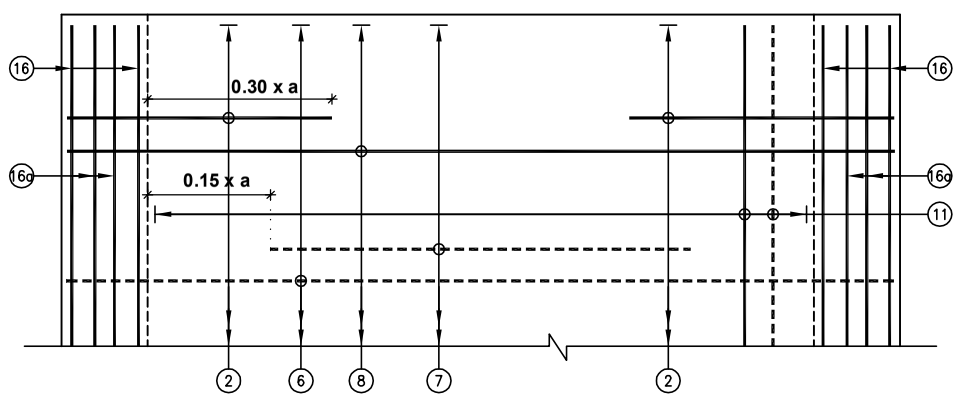

REINFORCEMENT DETAILS PLAN OF TOP SLAB SCALE-1:25
(BAR MARK 5, 16a KERB AND HAUNCH LINE NOT SHOWN IN PLAN)

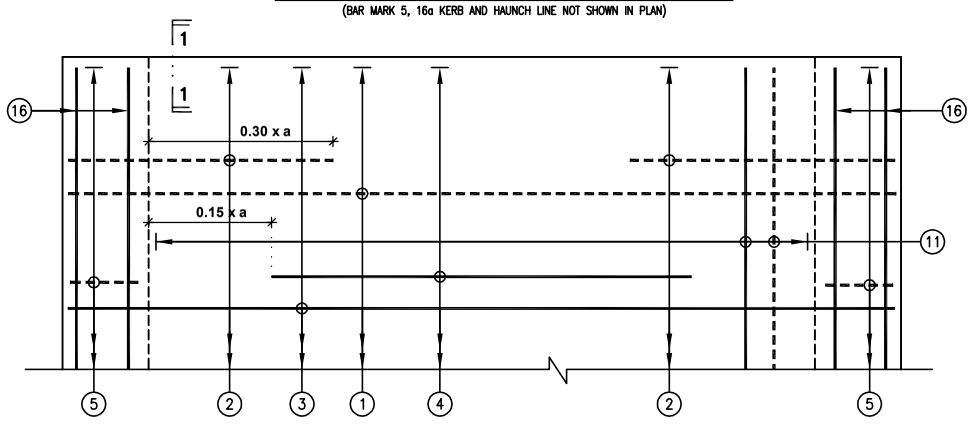

REINFORCEMENT DETAILS PLAN OF BOTTOM SLAB SCALE-1:25
(HAUNCH LINE NOT SHOWN IN PLAN)

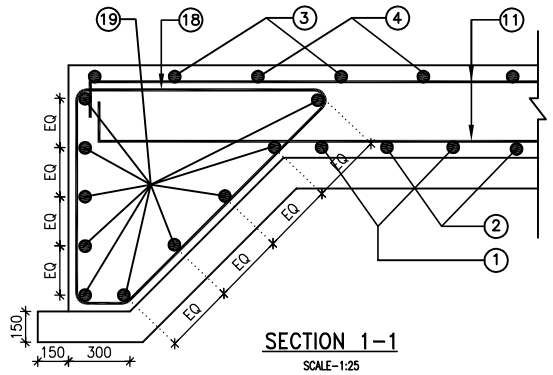

SECTION 1–1
SCALE-1:25

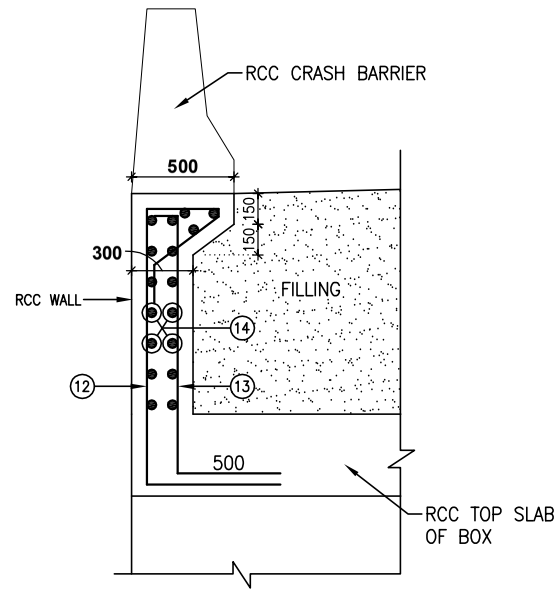

SECTION 2–2
SCALE-1:25

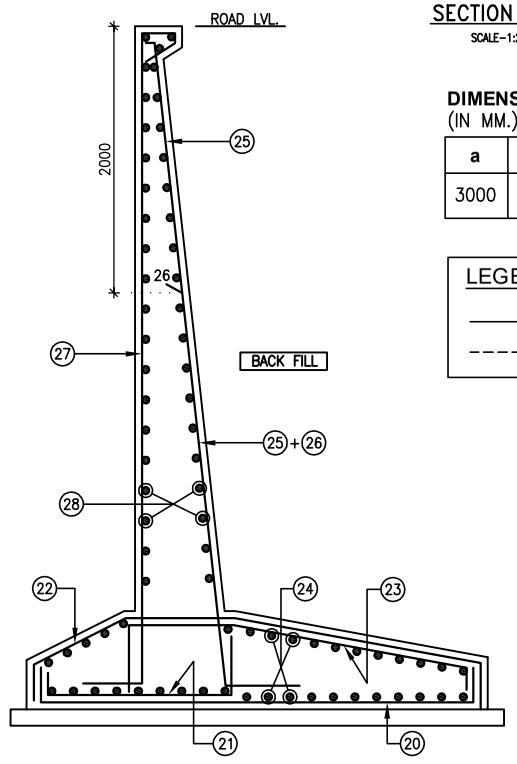

REINF. DETAILS OF RETAINING WALL

DIMENSIONS DETAILS
(IN MM.)

a	b	c	d	e
3000	3000	300	300	350

LEGEND :-

——— TOP FACE BARS / OUTER FACE BAR

- - - - - - BOTTOM FACE BARS / INNER FACE BAR

NOTES:-

(1) ALL DIMENSIONS ARE IN MILLIMETER.
(2) DO NOT SCALE THIS DRAWING FOLLOW ONLY WRITTEN DIMENSIONS.
(3) THIS DRAWING MUST BE READ IN CONJUNCTION WITH ALL OTHER RELEVANT DRAWINGS.
(4) Ø INDICATES TMT Fe:500D REINFORCEMENT AND CONFORMING TO IS: 1786 (INCLUDING LATEST AMMENDMENTS.)
(5) CONCRETE MIX SHALL BE M:40 FOR RCC BOX.
(6) CLEAR COVER TO ANY REINFORCEMENT SHALL BE 75 MM FOR BOTTOM SLAB & WALL AND 50 MM FOR TOP SLAB & RETAINING WALL.
(7) NUMBER OF BAR SHOULD NOT BE COUNTED BUT NUMBER OF BAR AND SPACING INDICATED SHALL BE ADOPTED.
(8) LAP IF REQUIRED SHALL BE 87 x DIA OF BARS.
(9) SCHEDULE OF REINFORCEMENT IS ONLY FOR GUIDANCE AND SHALL BE VARIFIED BEFORE CUTTING / BENDING THE BAR.
(10) DISTRIBUTION REINFORCEMENT SHALL BE SECURELY TIED WITH THE MAIN REINFORCEMENT AT ALL JOINTS.
(11) SUITABLE SUPPORT SYSTEM SHALL BE PROVIDED BETWEEN ROWS OF MAIN BARS TO MAINTAIN THERE CORRECT PLACING.
(12) BACK FILLING BEHIND THE BOX SHALL BE WITH MATERIAL HAVING ø=30° AND C=0 (ZERO).
(13) S.B.C. SHOULD NOT BE LESS THAN 20.00 T/SQ.MT.

SCHEDULE OF REINFORCEMENT (TMT Fe:500D GRADE REIN.)

MK. OF BAR	SHAPE OF BAR	DIA. OF BAR	SPACING IN MM.	LENGTH IN METER	NOS. OF BARS	TOTAL LENGTH IN MT.	WEIGHT /RMT. IN KG.	TOTAL WEIGHT IN KG.
1	1175, 3450, 1175	12	200	5.800	120	696.00	0.888	618
2	1125, 3525, 1125	16	200	5.775	120x2= 240	1386.00	1.578	2187
3	250, 3450, 250	12	200	3.950	120	474.00	0.888	421
4	2100	12	200	2.100	120	252.00	0.888	224
5	200, 3525, 150	12	100	3.875	240x2= 480	1860.00	0.888	1652
6	300, 3450, 300	12	200	4.050	120	486.00	0.888	432
7	2100	12	200	2.100	120	252.00	0.888	224
8	1150, 3450, 1150	12	200	5.750	120	690.00	0.888	613
9	200, 845, 200	10	200	1.245	120x2= 240	298.80	0.620	185
10	200, 845, 200	10	200	1.245	120x2= 240	298.80	0.620	185
11	150, 23900, 150	12	200	24.300	(15+15)x4 =120	2916.00	0.888	2589
12	200, 1250, 150, 50, 750	10	150	2.835	24x2= 48	136.08	0.620	85
13	200, 1250, 550	10	150	2.000	24x2= 48	96.00	0.620	60
14	150, 3500, 150	8	200	3.800	3x2x2=12	45.60	0.395	18
16	200, 23900, 200	10	–	24.300	16	388.80	0.620	241
16a	200, 23900, 200	10	–	24.300	8	194.40	0.620	121
18	1300, 1100, 1556, 200	10	150	4.256	24x2=48	204.288	0.620	127
19	200, 3500, 200	10	–	3.900	20	78.00	0.620	49
20	225, 4350, 225	12	200	4.800	27x4=108	518.40	0.888	460
21	225, 1725, 500	16	200	2.450	27x4=108	264.60	1.578	418
22	225, 1160, 600, 2640, 225	12	200	4.850	27x4=108	523.80	0.888	465
23	500, 600, 2640, 225	16	200	3.965	27x4=108	428.22	1.578	676
24	5300	12	200	5.300	20x2x4= 160	848.00	0.888	753
25	150, 5550, 350	12	200	6.050	27x4=108	653.40	0.888	580
26	150, 3550, 350	20	200	4.050	27x4=108	437.40	2.470	1080
27	150, 5550, 400, 50, 350	12	200	6.500	27x4=108	702.00	0.888	624
28	5300	12	200	5.300	25x2x4= 200	1060.00	0.888	941
						TOTAL		16028
						ADD.2.5% WASTAGE AND LAP		400
						TOTAL IN KG.		**16428**

* BAR MK '15' & '17' ARE NOT IN USED.

REV.	DATE	REVISIONS

CLIENT:
NATIONAL HIGHWAYS & INFRASTRUCTURE DEVELOPMENT CORPORATION LTD.
PTI BUILDING, 4 PARLIAMENT STREET
SANSAD MARG AREA, NEW DELHI - 110001

DESIGN CONSULTANT:
ANANDJIWALA INFRA ADVISORY
9, Shivranjani Shopping Center, On 132 Feet Ring Road
Nr. Shivranjani Cross Road, Satellite, Ahmedabad - 380 015
Email: anandjiwalainfra@gmail.com

PROJECT:
CONSULTANCY SERVICES FOR FEASIBILITY STUDY, PREPARATION OF DETAILED PROJECT REPORT AND PROVIDING PRE-CONSTRUCTION SERVICES FOR UPGRADATION OF EXISTING 2 LANE HIGHWAY TO 4 LANE WITH PAVED SHOULDER CONFIGURATION (NH-144A) FROM KM 26.350 (KHATI CHOWK) TO KM 30.097 (HANUMAN CHOWK) OF JAMMU - AKHNOOR SECTION IN THE UNION TERRITORY OF JAMMU & KASHMIR ON EPC BASIS

SCALE AT A3 SIZE DRAWING

TITLE:
REINFORCEMENT DRAWING OF SINGLE CELL BOX CULVERT 3.0x3.00m WITH CUSHION AT CH: 29+641

CLIENT APPROVAL: | SIGNATURE:

DWG NO:–

DRAWN:	CHECKED:	DESIGNED:	APPROVED:
LK	SJ	SC	LA

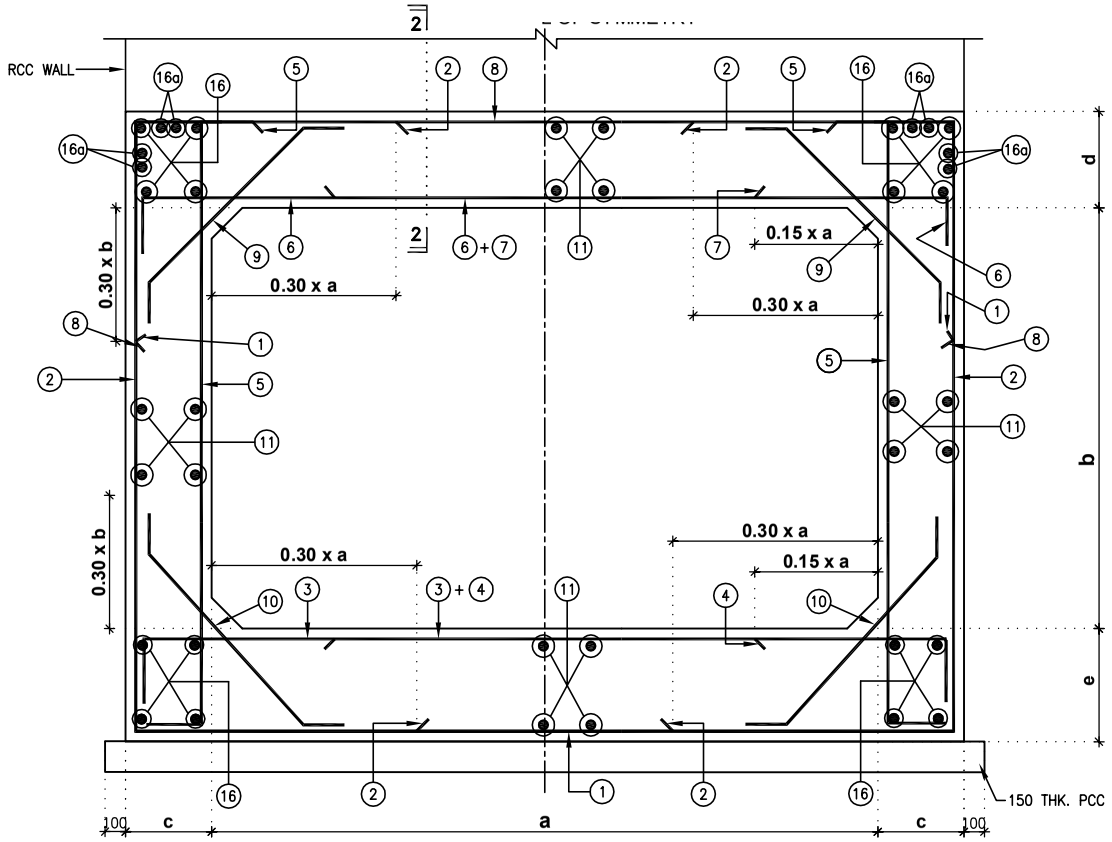

REINFORCEMENT DETAILS OF SINGLE CELL BOX CULVERT
SCALE-1:25

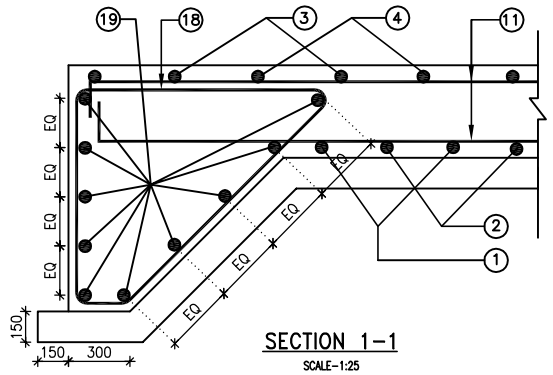

SECTION 1-1
SCALE-1:25

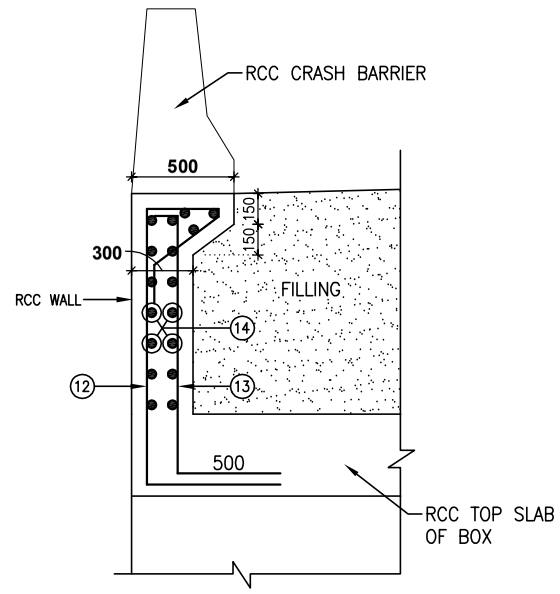

SECTION 2-2
SCALE-1:25

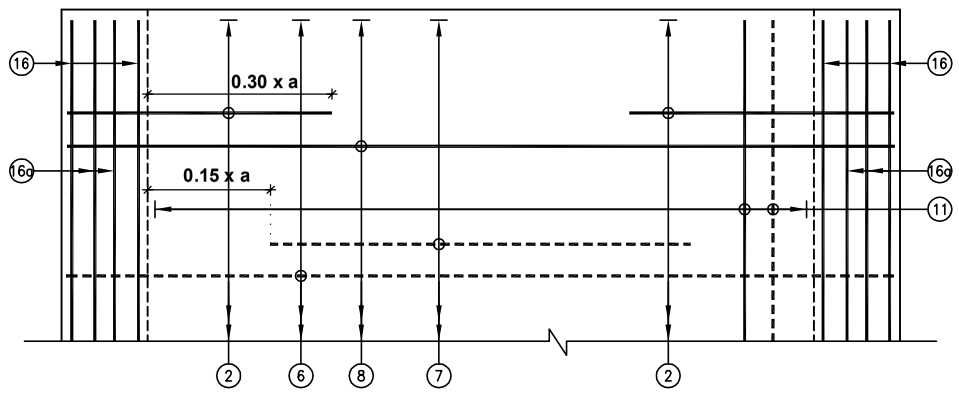

REINFORCEMENT DETAILS PLAN OF TOP SLAB SCALE-1:25
(BAR MARK 5, 16a KERB AND HAUNCH LINE NOT SHOWN IN PLAN)

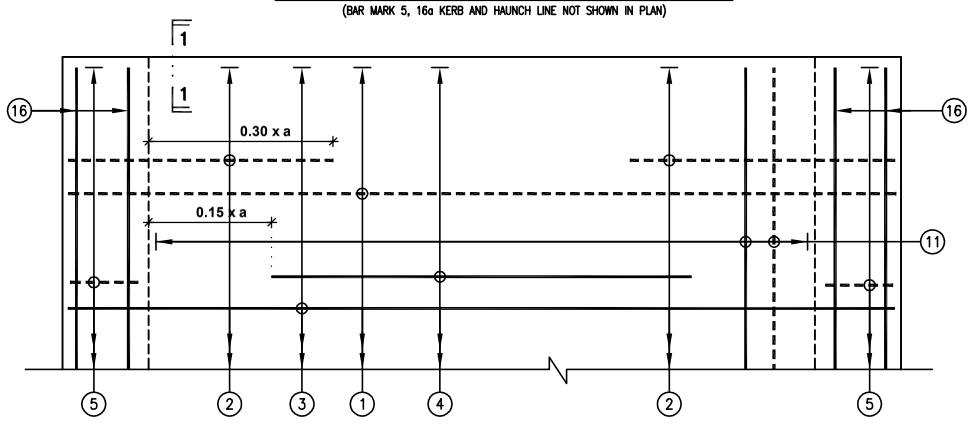

REINFORCEMENT DETAILS PLAN OF BOTTOM SLAB SCALE-1:25
(HAUNCH LINE NOT SHOWN IN PLAN)

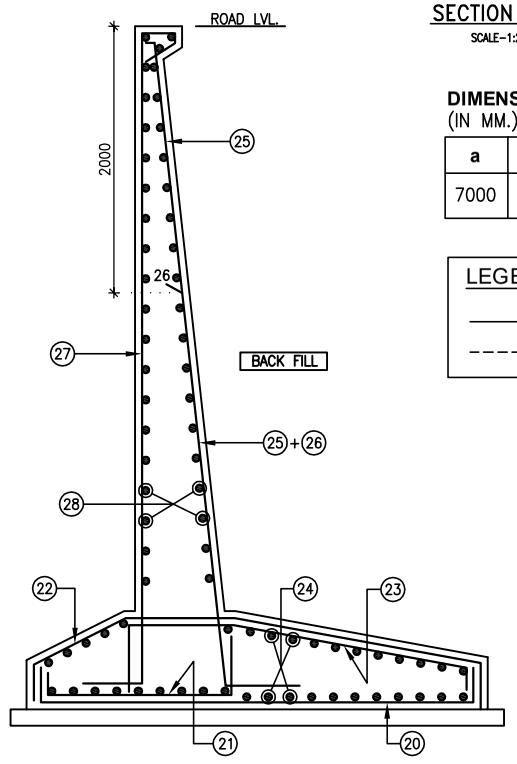

REINF. DETAILS OF RETAINING WALL

DIMENSIONS DETAILS
(IN MM.)

a	b	c	d	e
7000	4000	550	550	600

LEGEND :-

——— TOP FACE BARS / OUTER FACE BAR

- - - - - - BOTTOM FACE BARS / INNER FACE BAR

SCHEDULE OF REINFORCEMENT (TMT Fe:500D GRADE REIN.)

MK. OF BAR	SHAPE OF BAR	DIA. OF BAR	SPACING IN MM.	LENGTH IN METER	NOS. OF BARS	TOTAL LENGTH IN MT.	WEIGHT /RMT. IN KG.	TOTAL WEIGHT IN KG.
1	1725, 7950, 1725	16	200	11.400	120	1368.00	1.578	2159
2	2575, 5025, 2575	20	200	10.175	120x2= 240	2442.00	2.470	6032
3	350, 7950, 350	20	200	8.650	120	1038.00	2.470	2564
4	4900	16	200	4.900	120	588.00	1.578	928
5	200, 5025, 150	12	100	5.375	240x2= 480	2580.00	0.888	2291
6	300, 7950, 300	16	200	8.550	120	1026.00	1.578	1619
7	4900	16	200	4.900	120	588.00	1.578	928
8	1650, 7950, 1650	16	200	11.250	120	1350.00	1.578	2130
9	200, 845, 200	10	200	1.245	120x2= 240	298.80	0.620	185
10	200, 845, 200	10	200	1.245	120x2= 240	298.80	0.620	185
11	150, 23900, 150	12	175	24.300	(40+23)x4 =252	6123.60	0.888	5438
12	985, 150, 200, 45, 50	10	150	2.570	54x2= 108	277.56	0.620	172
13	750, 200, 985, 550	10	150	1.735	54x2= 108	187.38	0.620	116
14	150, 8000, 150	8	200	8.300	4x2x2=16	132.800	0.395	53
16	200, 23900, 200	10	–	24.300	16	388.80	0.620	241
16a	200, 23900, 200	10	–	24.300	8	194.40	0.620	121
18	1300, 1100, 45, 200, 1556	10	150	4.256	54x2=108	459.65	0.620	285
19	200, 8000, 200	10	–	8.400	20	168.00	0.620	104
20	275, 5550, 275	16	200	6.100	37x4=148	902.80	1.578	1425
21	275, 2375, 600	16	200	3.250	37x4=148	481.00	2.470	1188
22	275, 1665, 750, 3200, 275	16	200	6.165	37x4=148	912.42	1.578	1440
23	600, 750, 3200, 275	16	200	4.825	37x4=148	714.100	2.470	1764
24	7300	12	150	7.300	33x2x4= 264	1927.20	0.888	1711
25	150, 7045, 350	12	200	7.545	37x4=148	1166.66	0.888	992
26	150, 5045, 350	25	200	5.545	37x4=148	820.66	3.858	3166
27	150, 7045, 350, 400, 50	16	200	7.995	37x4=148	1183.26	1.578	1867
28	7300	12	150	7.300	42x2x4= 336	2452.80	0.888	2178

* BAR MK '15' & '17' ARE NOT IN USED.

TOTAL	41282
ADD.2.5% WASTAGE AND LAP	1032
TOTAL IN KG.	**42314**

NOTES:-

(1) ALL DIMENSIONS ARE IN MILLIMETER.
(2) DO NOT SCALE THIS DRAWING FOLLOW ONLY WRITTEN DIMENSIONS.
(3) THIS DRAWING MUST BE READ IN CONJUNCTION WITH ALL OTHER RELEVANT DRAWINGS.
(4) Ø INDICATES TMT Fe:500D REINFORCEMENT AND CONFORMING TO IS: 1786 (INCLUDING LATEST AMMENDMENTS.)
(5) CONCRETE MIX SHALL BE M:40 FOR RCC BOX.
(6) CLEAR COVER TO ANY REINFORCEMENT SHALL BE 75 MM FOR BOTTOM SLAB & WALL AND 50 MM FOR TOP SLAB & RETAINING WALL.
(7) NUMBER OF BAR SHOULD NOT BE COUNTED BUT NUMBER OF BAR AND SPACING INDICATED SHALL BE ADOPTED.
(8) LAP IF REQUIRED SHALL BE 87 x DIA OF BARS.
(9) SCHEDULE OF REINFORCEMENT IS ONLY FOR GUIDANCE AND SHALL BE VARIFIED BEFORE CUTTING / BENDING THE BAR.
(10) DISTRIBUTION REINFORCEMENT SHALL BE SECURELY TIED WITH THE MAIN REINFORCEMENT AT ALL JOINTS.
(11) SUITABLE SUPPORT SYSTEM SHALL BE PROVIDED BETWEEN ROWS OF MAIN BARS TO MAINTAIN THERE CORRECT PLACING.
(12) BACK FILLING BEHIND THE BOX SHALL BE WITH MATERIAL HAVING ø=30° AND C=0 (ZERO).
(13) S.B.C. SHOULD NOT BE LESS THAN 20.00 T/SQ.MT.

REV.	DATE	REVISIONS

CLIENT:
NATIONAL HIGHWAYS & INFRASTRUCTURE DEVELOPMENT CORPORATION LTD.
PTI BUILDING, 4 PARLIAMENT STREET
SANSAD MARG AREA, NEW DELHI - 110001

DESIGN CONSULTANT:
ANANDJIWALA INFRA ADVISORY
9, Shivranjani Shopping Center, On 132 Feet Ring Road
Nr. Shivranjani Cross Road, Satellite, Ahmedabad - 380 015
Email: anandjiwalainfra@gmail.com

PROJECT:
CONSULTANCY SERVICES FOR FEASIBILITY STUDY, PREPARATION OF DETAILED PROJECT REPORT AND PROVIDING PRE-CONSTRUCTION SERVICES FOR UPGRADATION OF EXISTING 2 LANE HIGHWAY TO 4 LANE WITH PAVED SHOULDER CONFIGURATION (NH-144A) FROM KM 26.350 (KHATI CHOWK) TO KM 30.097 (HANUMAN CHOWK) OF JAMMU - AKHNOOR SECTION IN THE UNION TERRITORY OF JAMMU & KASHMIR ON EPC BASIS

SCALE AT A3 SIZE DRAWING

TITLE:
REINFORCEMENT DRAWING OF SINGLE CELL BOX CULVERT 7.0x4.00m WITH CUSHION AT CH: 29+840

CLIENT APPROVAL: | SIGNATURE:

DWG NO:-

DRAWN:	CHECKED:	DESIGNED:	APPROVED:
LK	SJ	SC	LA

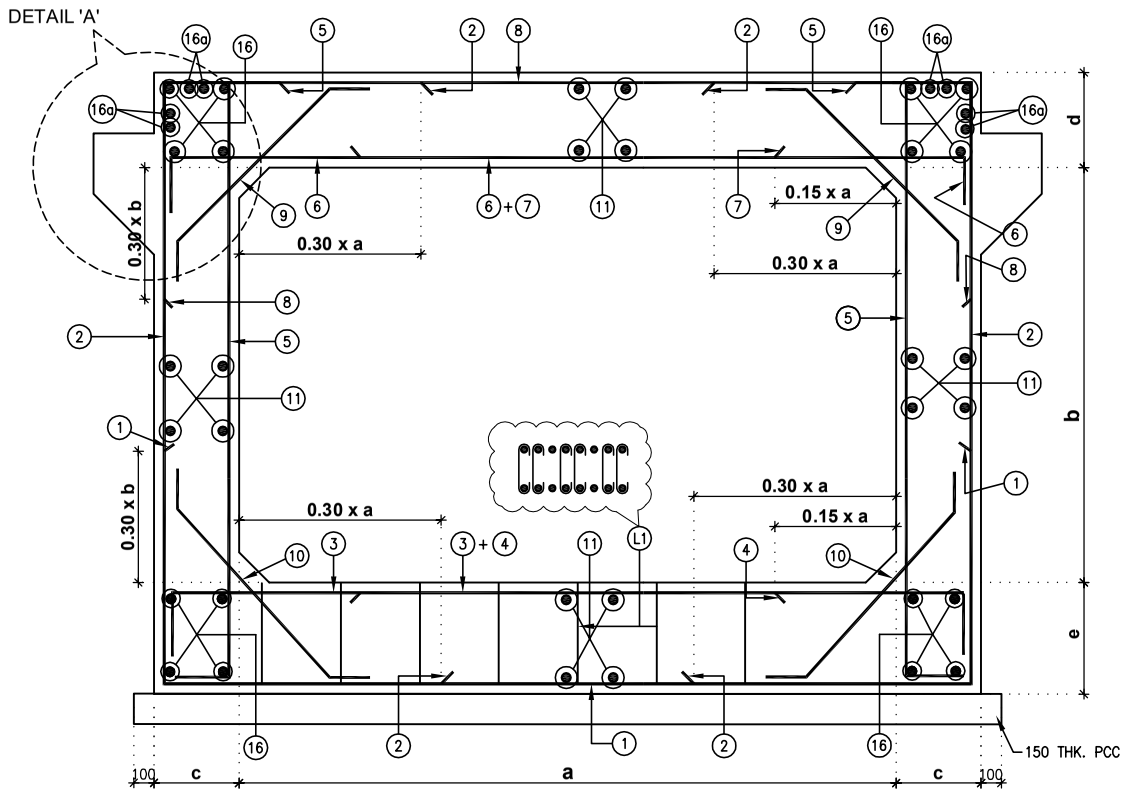

REINFORCEMENT DETAILS OF SINGLE CELL BOX CULVERT
SCALE-1:25

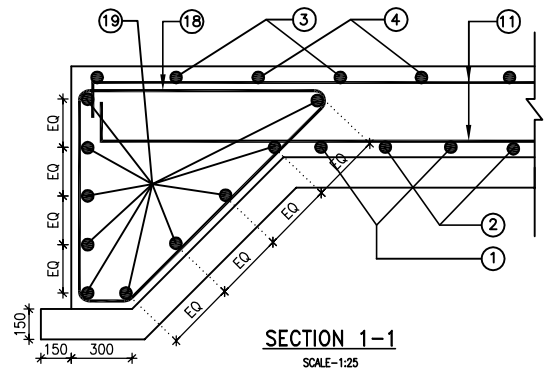

SECTION 1-1
SCALE-1:25

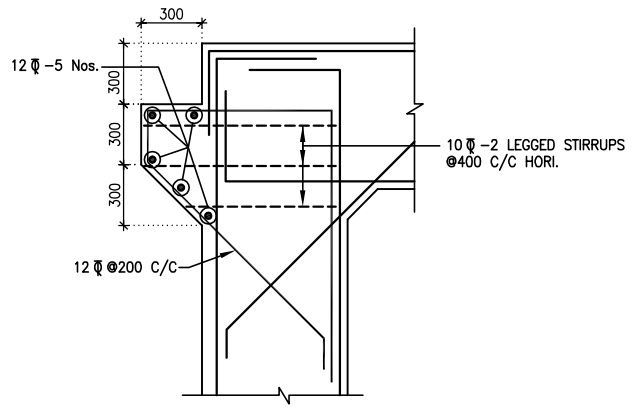

DETAIL AT 'A'
SCALE-1:25
THIS REINF. IS NOT INCLUDED IN BAR BENDING SCHEDULE

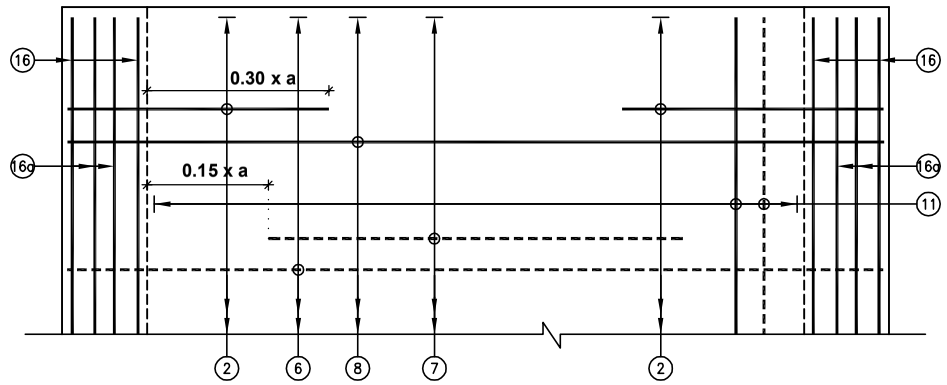

REINFORCEMENT DETAILS PLAN OF TOP SLAB SCALE-1:25
(BAR MARK 5, 16a KERB AND HAUNCH LINE NOT SHOWN IN PLAN)

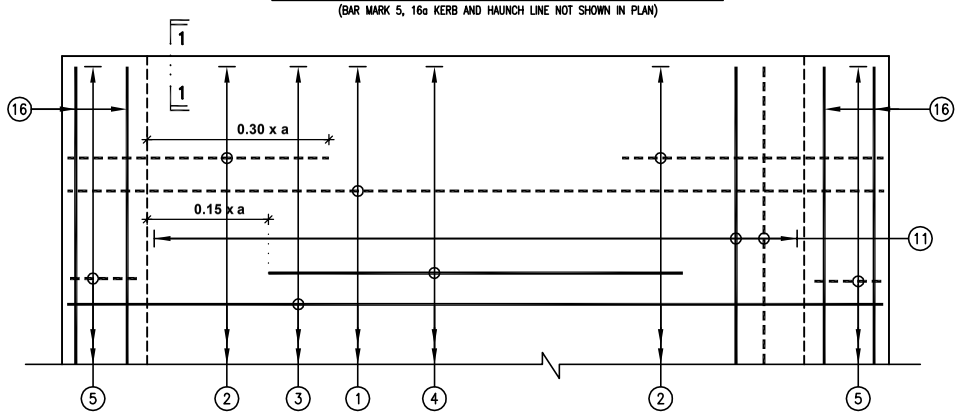

REINFORCEMENT DETAILS PLAN OF BOTTOM SLAB SCALE-1:25
(HAUNCH LINE NOT SHOWN IN PLAN)

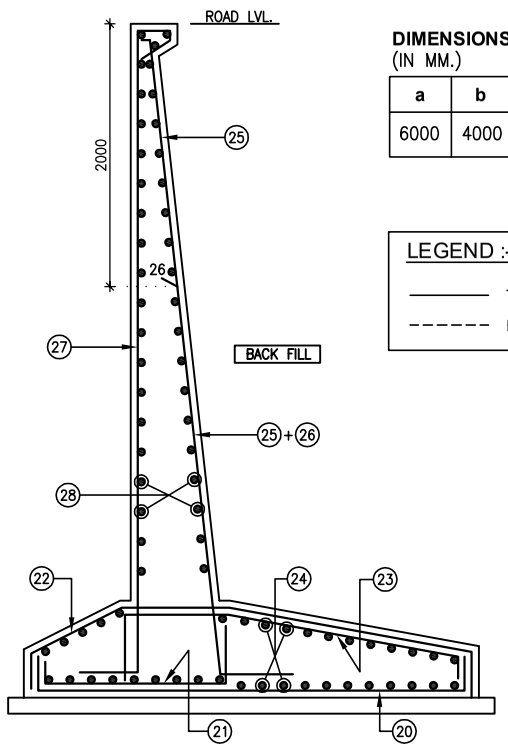

REINF. DETAILS OF RETAINING WALL

DIMENSIONS DETAILS
(IN MM.)

a	b	c	d	e
6000	4000	500	500	550

LEGEND :-

——— TOP FACE BARS / OUTER FACE BAR

- - - - - - BOTTOM FACE BARS / INNER FACE BAR

SCHEDULE OF REINFORCEMENT (TMT Fe:500 D GRADE REIN.)

MK. OF BAR	SHAPE OF BAR	DIA. OF BAR	SPACING IN MM.	LENGTH IN METER	NOS. OF BARS	TOTAL LENGTH IN MT.	WEIGHT /RMT. IN KG.	TOTAL WEIGHT IN KG.
1	1675, 6850, 1675	16	200	10.200	120	1224.00	1.578	1932
2	2225, 4925, 2225	16	200	9.375	120x2= 240	2250.00	1.578	3551
3	450, 6850, 450	16	200	7.750	120	930.00	1.578	1468
4	4200	16	200	4.200	120	504.00	1.578	795
5	200, 4925, 150	12	100	5.275	240x2=480	2532.00	0.888	2248
6	300, 6850, 300	16	200	7.450	120	894.00	1.578	1411
7	4200	16	200	4.200	120	504.00	1.578	795
8	1650, 6850, 1650	16	200	10.150	120	1218.00	1.578	1922
9	200, 1380, 200	10	200	1.780	121x2= 242	430.76	0.620	267
10	200, 1380, 200	10	200	1.780	121x2= 242	430.76	0.620	267
11	150, 23900, 150	10	150	24.200	(40+27)x4 =268	6485.60	0.62	4021
16	200, 23900, 200	10	–	24.200	16	387.20	0.620	240
16a	200, 23900, 200	10	–	24.200	8	193.60	0.620	120
18	1100, 200, 1300, 1556, 75	10	150	4.256	47x2=94	400.06	0.620	248
L1	400	8	300	0.550	80x20=1600	880.00	0.395	348
19	200, 6900, 200	10	--	7.300	20	146.00	0.620	91
20	225, 5050, 225	16	200	5.500	31x4=124	682.00	1.578	1076
21	225, 2075, 500	16	200	2.800	31x4=124	347.20	1.578	547
22	225, 1460, 650, 3000, 225	16	200	5.560	31x4=124	689.44	1.578	1088
23	500, 650, 3000, 225	16	200	4.375	31x4=124	542.50	1.578	856
24	150, 6200	12	200	6.200	23x2x4= 184	1140.80	0.888	1013
25	150, 6150, 350	16	200	6.650	31x4=124	824.6	1.578	1301
26	150, 4150, 350	20	200	4.650	31x4=124	576.60	2.470	1424
27	150, 6150, 50, 400, 350	16	200	7.100	31x4=124	880.40	1.578	1389
28	6200	12	200	6.200	28x2x4= 224	1388.80	0.888	1233
						TOTAL		29651
						ADD 2.5% WASTAGE AND LAP		741
						TOTAL IN KG.		**30392**

* BAR MK '12', '13', '14', '15' & '17' ARE NOT IN USED.

NOTES:-

(1) ALL DIMENSIONS ARE IN MILLIMETER.
(2) DO NOT SCALE THIS DRAWING FOLLOW ONLY WRITTEN DIMENSIONS.
(3) THIS DRAWING MUST BE READ IN CONJUNCTION WITH ALL OTHER RELEVANT DRAWINGS.
(4) ϕ INDICATES TMT Fe:500 D REINFORCEMENT AND CONFORMING TO IS: 1786 (INCLUDING LATEST AMMENDMENTS.)
(5) CONCRETE MIX SHALL BE M:40 FOR RCC BOX & RETAINING WALL.
(6) CLEAR COVER TO ANY REINFORCEMENT SHALL BE 75 MM FOR BOTTOM SLAB & WALL AND 50 MM FOR TOP SLAB & RETAINING WALL.
(7) NUMBER OF BAR SHOULD NOT BE COUNTED BUT NUMBER OF BAR AND SPACING INDICATED SHALL BE ADOPTED.
(8) LAP IF REQUIRED SHALL BE 87 x DIA. OF BARS.
(9) SCHEDULE OF REINFORCEMENT IS ONLY FOR GUIDANCE AND SHALL BE VARIFIED BEFORE CUTTING / BENDING THE BAR.
(10) DISTRIBUTION REINFORCEMENT SHALL BE SECURELY TIED WITH THE MAIN REINFORCEMENT AT ALL JOINTS.
(11) SUITABLE SUPPORT SYSTEM SHALL BE PROVIDED BETWEEN ROWS OF MAIN BARS TO MAINTAIN THERE CORRECT PLACING.
(12) BACK FILLING BEHIND THE BOX SHALL BE WITH MATERIAL HAVING ϕ=30° AND C=0 (ZERO).
(13) NET & GROSS S.B.C. SHOULD NOT BE LESS THAN 15.00 & 19.00 T/SQ.MT.

REV.	DATE	REVISIONS

CLIENT:
NATIONAL HIGHWAYS & INFRASTRUCTURE DEVELOPMENT CORPORATION LTD.
PTI BUILDING, 4 PARLIAMENT STREET
SANSAD MARG AREA, NEW DELHI - 110001

DESIGN CONSULTANT:
ANANDJIWALA INFRA ADVISORY
9, Shivranjani Shopping Center, On 132 Feet Ring Road
Nr. Shivranjani Cross Road, Satellite, Ahmedabad - 380 015
Email: anandjiwalainfra@gmail.com

PROJECT:
CONSULTANCY SERVICES FOR FEASIBILITY STUDY, PREPARATION OF DETAILED PROJECT REPORT AND PROVIDING PRE-CONSTRUCTION SERVICES FOR UPGRADATION OF EXISTING 2 LANE HIGHWAY TO 4 LANE WITH PAVED SHOULDER CONFIGURATION (NH-144A) FROM KM 26.350 (KHATI CHOWK) TO KM 30.097 (HANUMAN CHOWK) OF JAMMU - AKHNOOR SECTION IN THE UNION TERRITORY OF JAMMU & KASHMIR ON EPC BASIS

SCALE AT A3 SIZE DRAWING

TITLE:
REINFORCEMENT DRAWING OF SINGLE CELL BOX CULVERT 6.0x4.0 m WITHOUT CUSHION AT CH: 30+217

CLIENT APPROVAL:	SIGNATURE:

DWG NO:-

DRAWN:	CHECKED:	DESIGNED:	APPROVED:
LK	SJ	SC	LA

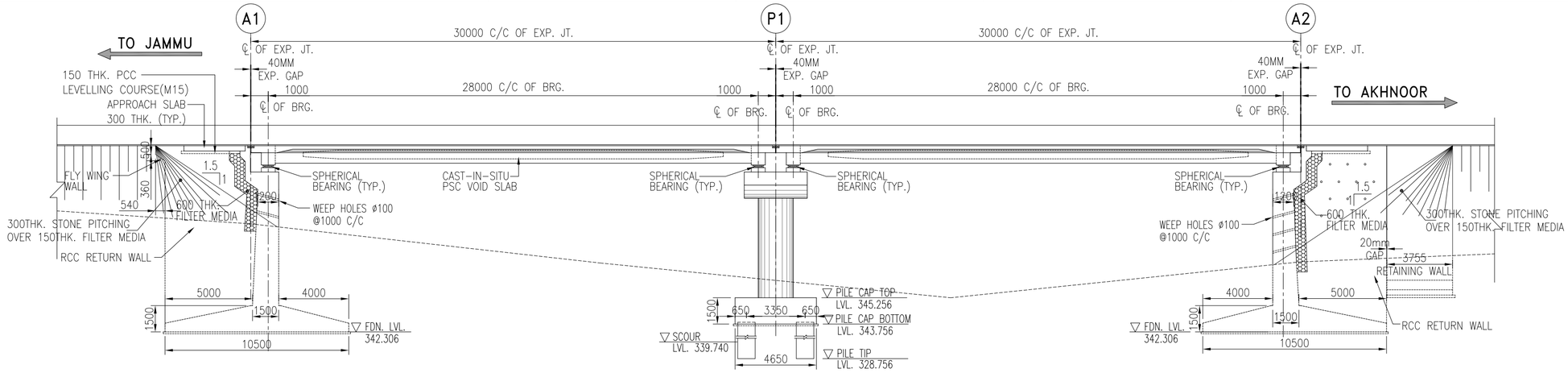

FRL	353.000	353.000	353.000	353.000	353.000
GROUND LVL.	348.476	346.236	345.246	344.256	346.306
CHAINAGE	29+120.000	29+140.000	29+150.000	29+160.000	29+180.000

LONGITUDINAL ELEVATION

(SCALE:– 1:200)

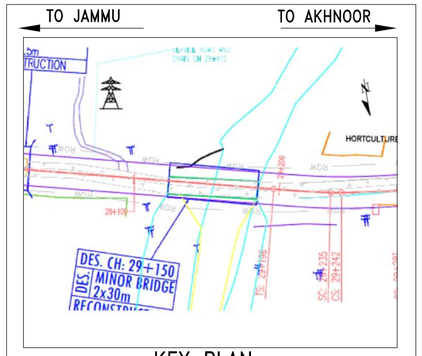

KEY PLAN

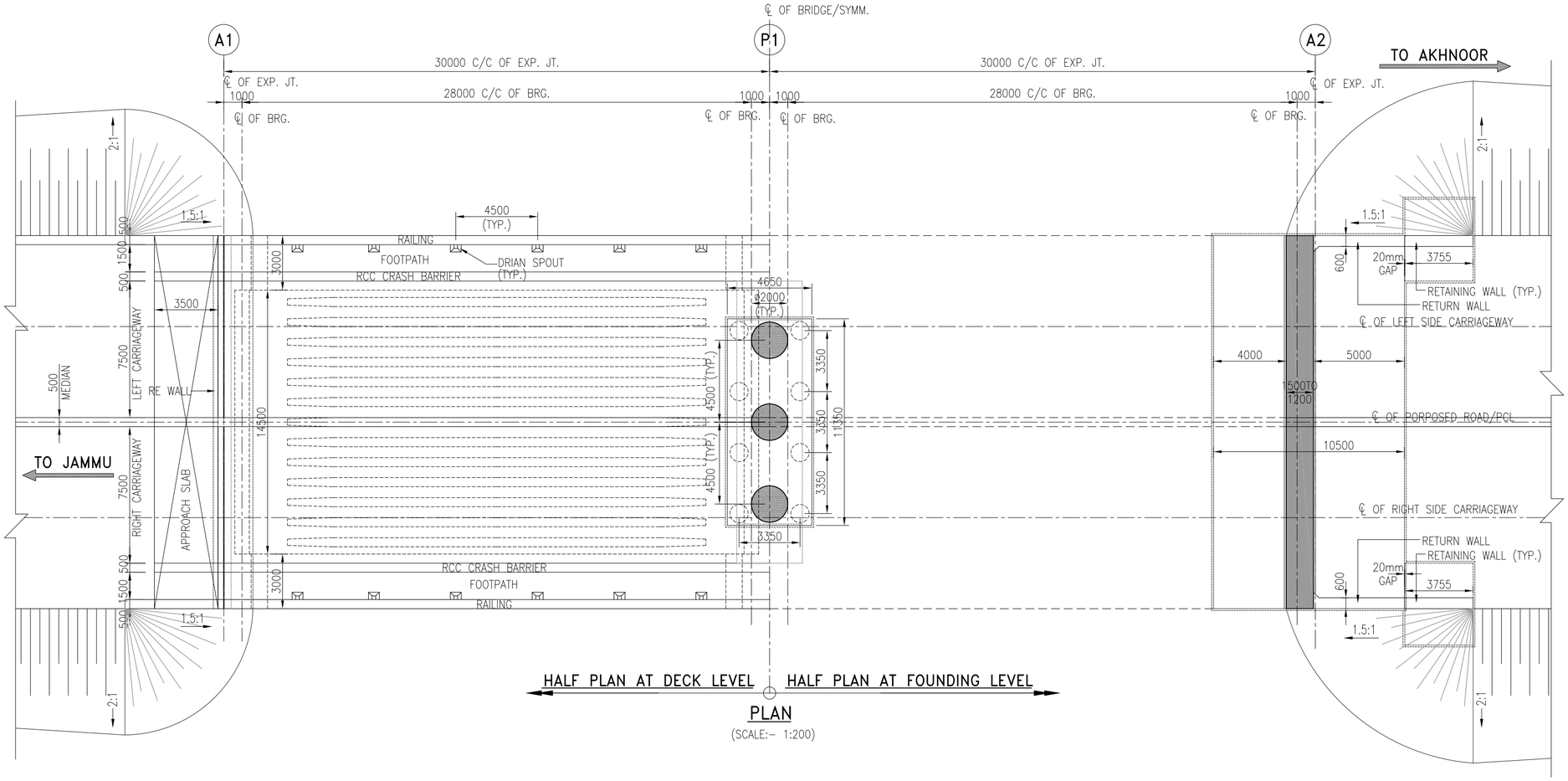

HALF PLAN AT DECK LEVEL | HALF PLAN AT FOUNDING LEVEL

PLAN

(SCALE:– 1:200)

REFERENCE DRAWINGS:

1. PSC VOID SLAB DIMEN. DETAILS :–NHIDCL/JA/STR/MNB/29+150/NU/401

NOTES:

1. ALL DIMENSIONS ARE IN mm. UNLESS OTHERWISE MENTIONED. ONLY WRITTEN DIMENSIONS ARE TO BE FOLLOWED.NO DIMENSION IS TO BE SCALED.
2. THE BRIDGE HAS BEEN DESIGNED FOR 4–LANE (2+2 LANE) WITH 70RW + 70RW, 4–LANES OF IRC CLASS A LOADING OR SV LOADING + 70RW WHICHEVER IS GOVERNS.
3. ALL REINFORCEMENT SHALL BE GRADE TMT BARS OF DESIGNATION Fe500 CONFORMING TO IS:1786 STANDARD WITH A MINIMUM YIELD STRENGTH OF 500 N/sq.mm.
4. WEARING COAT SHALL BE 50MM THK. BITUMINOUS CONCRETE WITH 3MM ASPHALT TO SEAL.
5. BACK FILLING SHALL CONSIST OF SELECTED EARTH CONFORMING TO APPENDIX: 6 OF IRC:78–2014 HAVING PROPERTIES C=0, ø = 35° & γd = 20KN/Cum.
6. THE DIMENSIONS AND LEVELS SHOWN IN THIS DRAWING ARE TENTATIVE. FOR DETAILS REFER RESPECTIVE STRUCTURAL & HIGHWAY DETAILED DRAWINGS.
7. CONCRETE SHALL BE DESIGN MIX AND 28 DAYS CHARACTERISTIC STRENGTH FOR VARIOUS COMPONENTS SHALL BE AS UNDER :

CAST–IN–SITU PSC VOID SLAB	M 50
CONCEALED BEAM	M 50
CRASH BARRIER	M 40
ABUT./PIER CAP	M 35
ABUT./PIER SHAFT	M 35
PILE & PILE CAP	M 35
APPROCH SLAB	M 30
PCC LEVELLING COURSE	M 15

8. STRIP SEAL TYPE EXPANSION JOINTS OF PROVEN QUALITY SHALL BE PROVIDED AS PER IRC : SP:69–2005.
9. CLEAR COVER TO OUTERMOST STEEL SHALL BE 75mm FOR EARTHEN FACE & 50MM FOR INNERFACE.
10. FOR DETAILS OF CRASH BARRIER, DRAINAGE SPOUT & APPROACH SLAB REFER MISCELLANEOUS DRAWINGS.
12. ASSUMED SBC OF SOIL AT ABUTMENT FOUNDING LEVEL IS 30.0t/m².
13. THE SAFE LOAD CAPACITY OF PILE:
    VERTICAL CAPACITY FOR PIER = 400T
    LATERAL CAPACITY FOR PIER = 40T
14. HYDRAULIC DATA FOR DESIGN OF BRIDGE.
    DESIGN DISCHARGE – cumecs
    HFL – 350.545 m
    MAX. VELOCITY – 3.5 m/sec
15. THE BRIDGE LIES IN SEISMIC ZONE – IV

REV	DATE	DESCRIPTION	DESIGNED	DRAWN	CHECKED	APPROVED
R0	27.08.21	ISSUED FOR APPROVAL	BJS	MPT	GMS	GMS

CLIENT:
NATIONAL HIGHWAYS & INFRASTRUCTURE DEVELOPMENT CORPORATION LTD.
PTI BUILDING, 4 PARLIAMENT STREET SANSAD MARG AREA, NEW DELHI-110001

DESIGN CONSULTANTS :
ANANDJIWALA INFRA ADVISORY
9, SHIVRANJANI SHOPPING CENTER, ON 132 FEET RING ROAD, NR. SHIVRANJANI CRROSS ROAD, SATELLITE, AHMEDABAD-380015
Email: anandjiwalainfra@gmail.com

PROJECT :
CONSULTANCY SERVICES FOR FEASIBILITY STUDY, PREPARATION OF DETAILED PROJECT REPORT AND PROVIDING PRE-CONSTRUCTION SERVICES FOR UPGRADATION OF EXISTING 2-LANE HIGHWAY TO 4-LANE WITH PAVED SHOULDER CONFIGURATION (NH-144A) FROM KM 26.350 (KHATI CHOWK) TO KM 30.097 (HANUMAN CHOWK) OF JAMMU-AKHNOOR SECTION IN THE UNION TERRITORY OF JAMMU & KASHMIR ON EPC BASIS

DESIGNED	BJS	
DRAWN	MPT	
CHECKED	GMS	
APPROVED	GMS	
DATE 27.08.2021	SCALE: AS SHOWN	

TITLE : RECONSTRUCTION OF MINOR BRIDGE AT DESIGN CH:29+150.000 GENERAL ARRANGEMENT DRAWING FOR 2x30.0M SPAN

REV. R0
SIZE A2

DRAWING NO : NHIDCL/JA/STR/MNB/29+150/GA/101

SHEET 01 OF 02

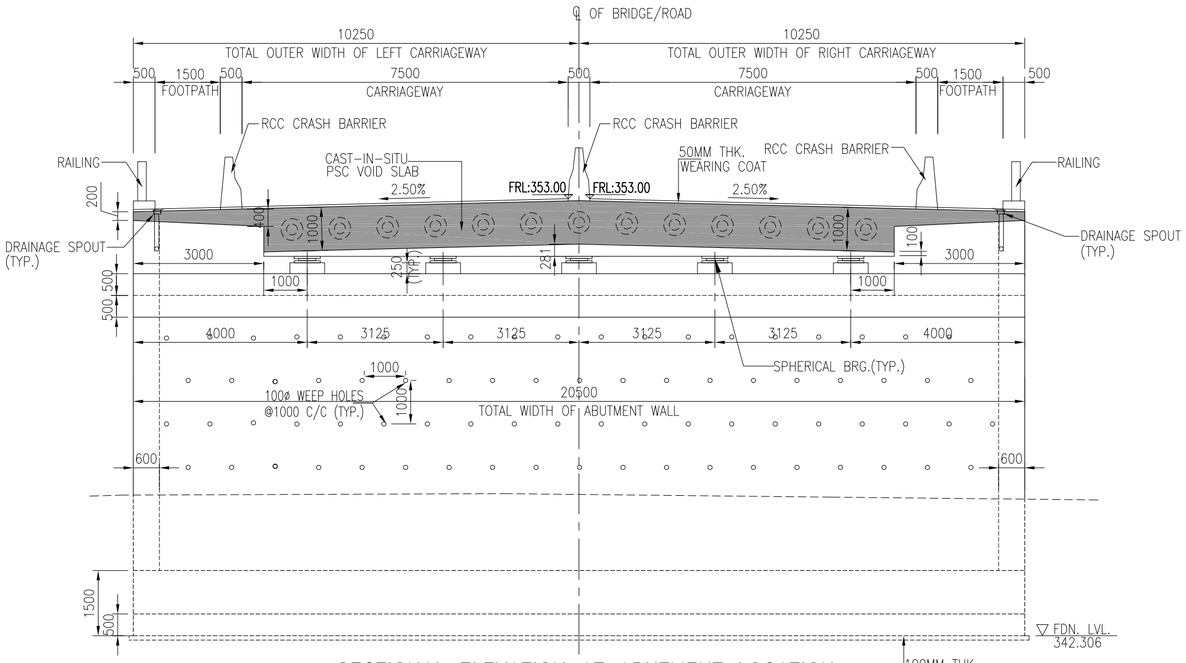

SECTIONAL ELEVATION AT ABUTMENT LOCATION

(SCALE:- 1:100)

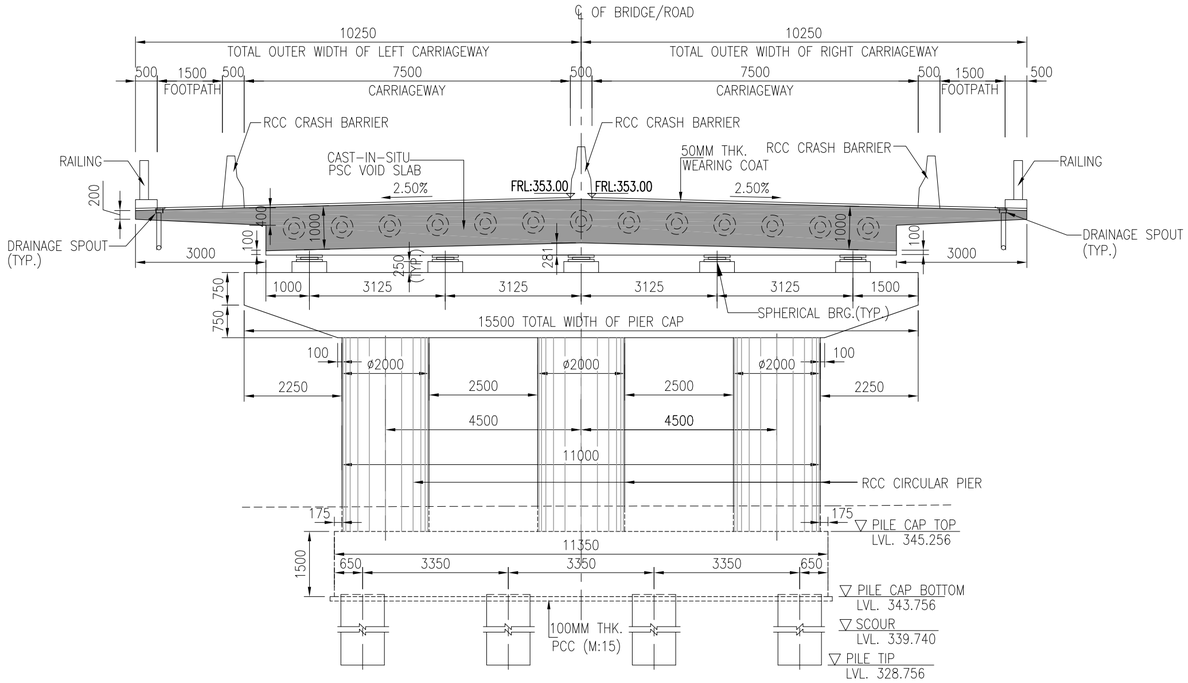

SECTIONAL ELEVATION AT PIER-P1 LOCATION

(SCALE:- 1:100)

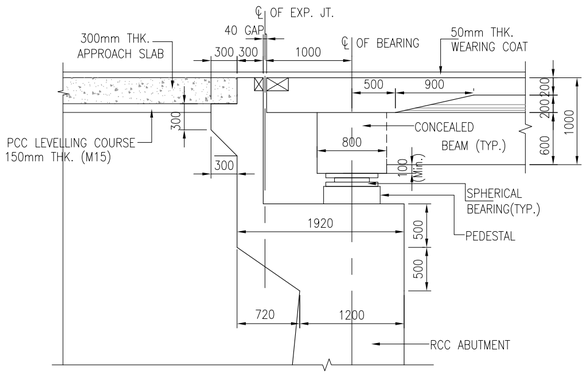

DETAILS AT ABUTMENT CAP

(SCALE 1:50)

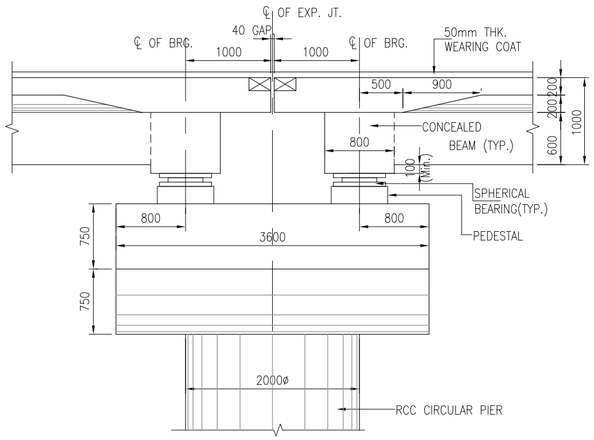

DETAILS AT ABUTMENT CAP

(SCALE 1:50)

REFERENCE DRAWINGS:

1. PSC VOID SLAB DIMEN. DETAILS :-NHIDCL/JA/STR/MNB/29+150/NU/401

NOTES:

1. ALL DIMENSIONS ARE IN mm. UNLESS OTHERWISE MENTIONED. ONLY WRITTEN DIMENSIONS ARE TO BE FOLLOWED.NO DIMENSION IS TO BE SCALED.
2. FOR ALL OTHER NOTES REFER SHEET 01 OF 02.

REV	DATE	DESCRIPTION	DESIGNED	DRAWN	CHECKED	APPROVED
R0	27.08.21	ISSUED FOR APPROVAL	BJS	MPT	GMS	GMS

CLIENT:

NATIONAL HIGHWAYS & INFRASTRUCTURE DEVELOPMENT CORPORATION LTD.

PTI BUILDING, 4 PARLIAMENT STREET
SANSAD MARG AREA, NEW DELHI-110001

DESIGN CONSULTANTS :

ANANDJIWALA INFRA ADVISORY

9, SHIVRANJANI SHOPPING CENTER, ON 132 FEET RING ROAD, NR. SHIVRANJANI CRROSS ROAD, SATELLITE, AHMEDABAD-380015
Email: anandjiwalainfra@gmail.com

PROJECT :

CONSULTANCY SERVICES FOR FEASIBILITY STUDY, PREPARATION OF DETAILED PROJECT REPORT AND PROVIDING PRE-CONSTRUCTION SERVICES FOR UPGRADATION OF EXISTING 2-LANE HIGHWAY TO 4-LANE WITH PAVED SHOULDER CONFIGURATION (NH-144A) FROM KM 26.350 (KHATI CHOWK) TO KM 30.097 (HANUMAN CHOWK) OF JAMMU-AKHNOOR SECTION IN THE UNION TERRITORY OF JAMMU & KASHMIR ON EPC BASIS

DESIGNED	BJS
DRAWN	MPT
CHECKED	GMS
APPROVED	GMS
DATE 27.08.2021	SCALE: AS SHOWN

TITLE : RECONSTRUCTION OF MINOR BRIDGE AT DESIGN CH:29+150.000 GENERAL ARRANGEMENT DRAWING FOR 2x30.0M SPAN

REV. R0

SIZE A2

DRAWING NO :

NHIDCL/JA/STR/MNB/29+150/GA/101

SHEET 02 OF 02

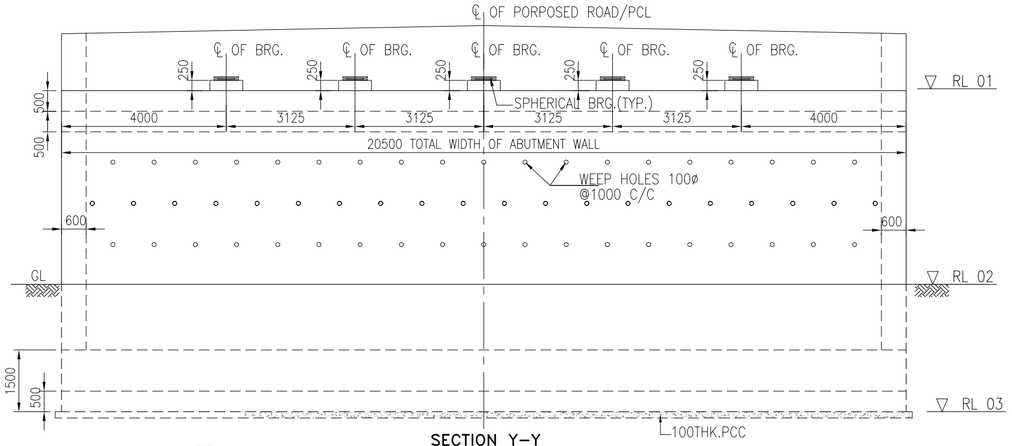

SECTION Y–Y
(SCALE 1:75)

ABUTMENT LOCATION	RL 01	RL 02	RL 03
A1	351.225	348.476	342.306
A2	351.225	346.306	342.306

* THESE LEVELS ARE WORKEDOUT WITH ASSUMPTION OF 250mm THICKNESS OF MIN. PEDESTAL & 200mm THICKNESS OF BEARING.

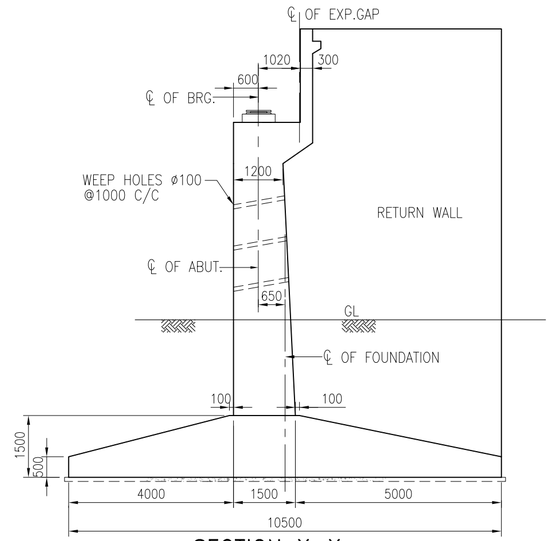

SECTION X–X
(SCALE 1:100)

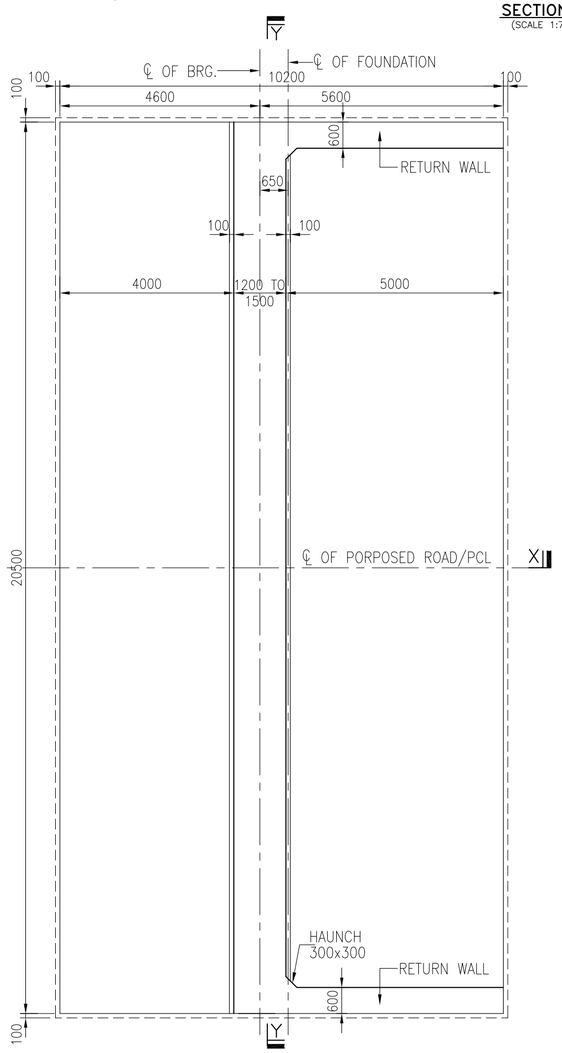

FOUNDATION PLAN
FOR ABUTMENT
(SCALE 1:100)

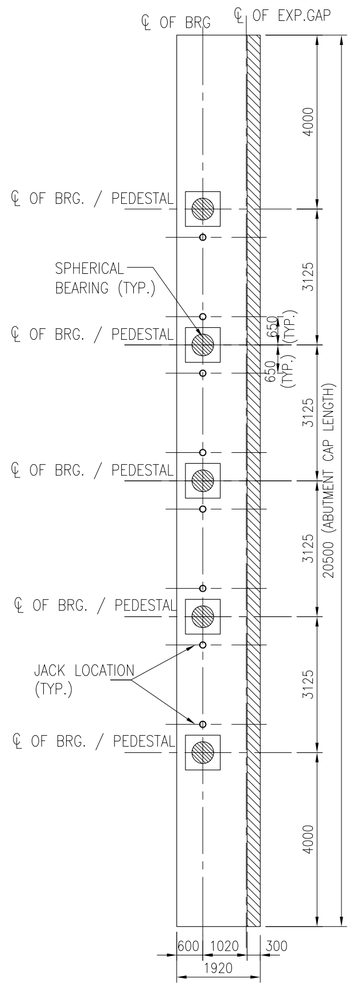

PLAN OF THE ABUTMENT
CAP SHOWING BEARING,
PEDESTAL & JACK LOCATION
(SCALE 1:100)

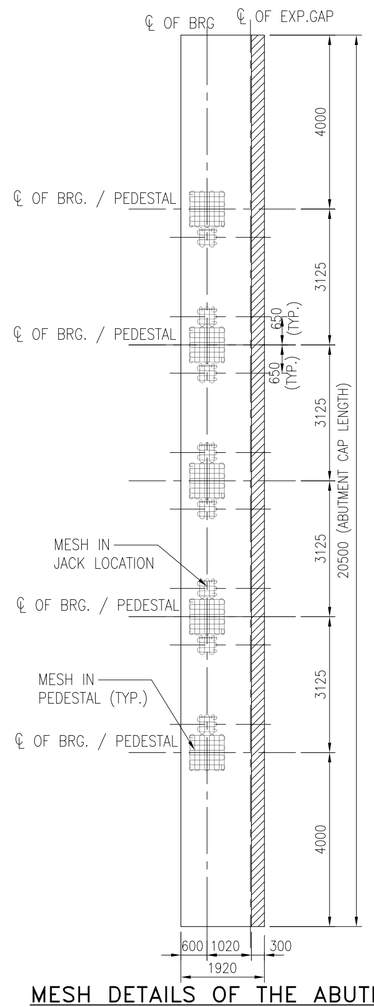

MESH DETAILS OF THE ABUTMENT
CAP SHOWING BEARING, PEDESTAL
& JACK LOCATION
(SCALE 1:100)

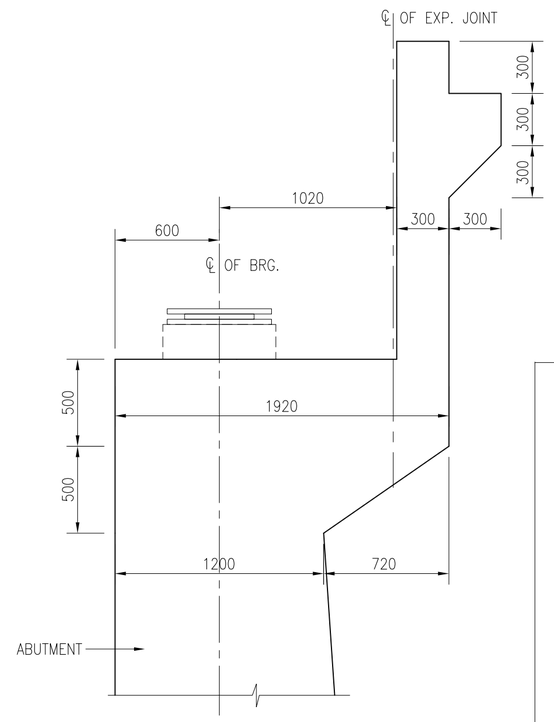

DIMENSION DETAIL OF ABUTMENT A1&A2
(SCALE 1:25)

NOTES:

1. ALL DIMENSIONS ARE IN mm. UNLESS OTHERWISE MENTIONED. ONLY WRITTEN DIMENSIONS ARE TO BE FOLLOWED.NO DIMENSION IS TO BE SCALED.
2. ALL UNTENSIONED REINFORCEMENT SHALL BE GRADE TMT BARS OF DESIGNATION Fe 500 CONFORMING TO IS:1786 STANDARD WITH A MINIMUM YIELD STRENGTH OF 500 N/sq.mm.
3. THE CONCRETE SHALL BE DESIGN MIX AND 28 DAYS CHARACTERISTIC STRENGTH FOR VARIOUS COMPONENTS SHALL BE AS UNDER.

   PRECAST RCC GIRDER---------- M 40
   RCC DECK SLAB ----------M 40
   CRASH BARRIER ---------- M 40
   SUBSTRUCTURE ---------- M 35
   FOUNDATION ---------- M 35
   PCC LEVELLING COURSE ---------- M 15
4. THE BRIDGE LIES IN SEISMIC ZONE – II
5. LAP LENTH OF THE STEEL SHALL BE PROVIDED AS BELOW :
   LAP LENGTH = α x ANCHORAGE LENGTH
   ANCHORAGE LENGTH = BAR DIA (ø)
   α =1.00 WHERE <25% LAPPED BAR RELATIVE TO TOTAL CROSS SECTIONAL AREA.
   α =1.15 WHERE 33% LAPPED BAR RELATIVE TO TOTAL CROSS SECTIONAL AREA.
   α =1.40 WHERE 50% LAPPED BAR RELATIVE TO TOTAL CROSS SECTIONAL AREA.

GRADE OF CONCRETE	M25	M30	M35	M40	M45	M50
k	47	40	36	34	32	29

6. NOTE MORE THAN 50% OF REINFORCEMENT SHALL BE LAPPED AT ANY LOCATION.
7. THE COVER TO OUTERMOST REINFORCEMENT FOR EARTH FACE COMPONENETS SHALL BE 75mm AND FOR OTHER COMPONENTS 50mm.
8. THE SBC OF STRATA AT THE GIVEN FOUNDING LEVEL IS TAKEN AS 30.0 T/Sqm BASED ON GEOTECH REPORT. & SBC SHALL BE ENSURED ON SITE BE FOR EXECUTION OF WORK.

REFERENCE DRAWINGS:–

1. GENERAL ARRANGEMENT DRAWING:–NHIDCL/JA/STR/MNB/29+150/GA/101(2–SHTS)
2. REINF. DETAILS OF ABUTMENT: –NHIDCL/JA/STR/MNB/29+150/NU/202(2–SHTS)

REV	DATE	DESCRIPTION	DESIGNED	DRAWN	CHECKED	APPROVED
R0	27.08.21	ISSUED FOR APPROVAL	VJ	MPT	GMS	GMS

CLIENT:
NATIONAL HIGHWAYS & INFRASTRUCTURE DEVELOPMENT CORPORATION LTD.
PTI BUILDING, 4 PARLIAMENT STREET
SANSAD MARG AREA, NEW DELHI-110001

DESIGN CONSULTANTS :
ANANDJIWALA INFRA ADVISORY
9, SHIVRANJANI SHOPPING CENTER, ON 132 FEET RING ROAD, NR. SHIVRANJANI CRROSS ROAD, SATELLITE, AHMEDABAD-380015
Email: anandjiwalainfra@gmail.com

PROJECT :
CONSULTANCY SERVICES FOR FEASIBILITY STUDY, PREPARATION OF DETAILED PROJECT REPORT AND PROVIDING PRE-CONSTRUCTION SERVICES FOR UPGRADATION OF EXISTING 2-LANE HIGHWAY TO 4-LANE WITH PAVED SHOULDER CONFIGURATION (NH-144A) FROM KM 26.350 (KHATI CHOWK) TO KM 30.097 (HANUMAN CHOWK) OF JAMMU-AKHNOOR SECTION IN THE UNION TERRITORY OF JAMMU & KASHMIR ON EPC BASIS

DESIGNED	VJ
DRAWN	MPT
CHECKED	GMS
APPROVED	GMS
DATE	27.08.2021
SCALE:	AS SHOWN

TITLE : RECONSTRUCTION OF MINOR BRIDGE AT DESIGN CH:29+150.000 DIMENSIONAL DETAILS OF ABUTMENT - A1 & A2

REV. R0
SIZE A2

DRAWING NO : NHIDCL/JA/STR/MNB/29+150/NU/201

SHEET 01 OF 01

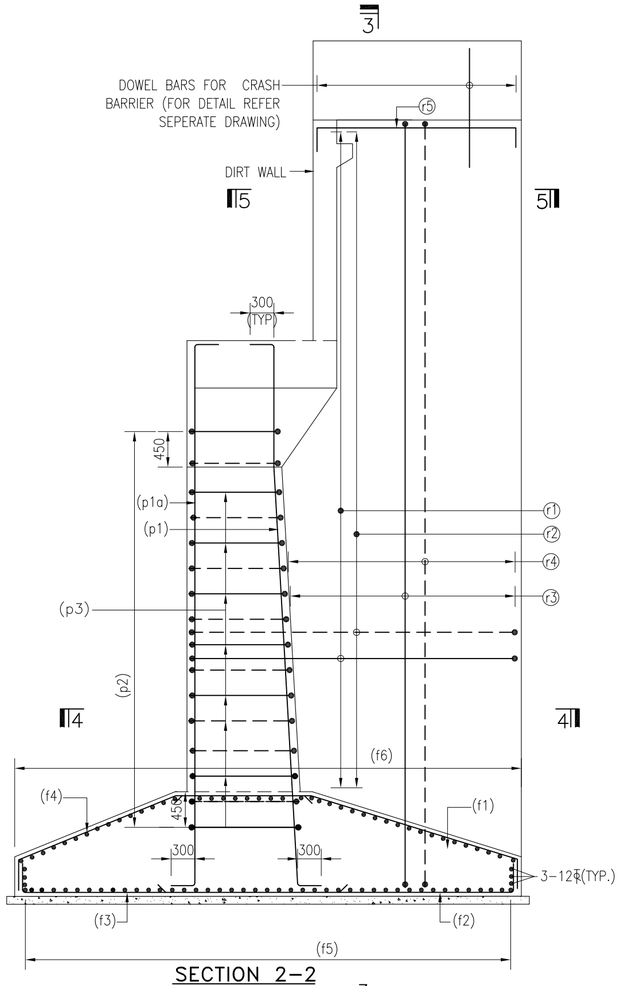

SECTION 2–2
(SCALE 1:50)

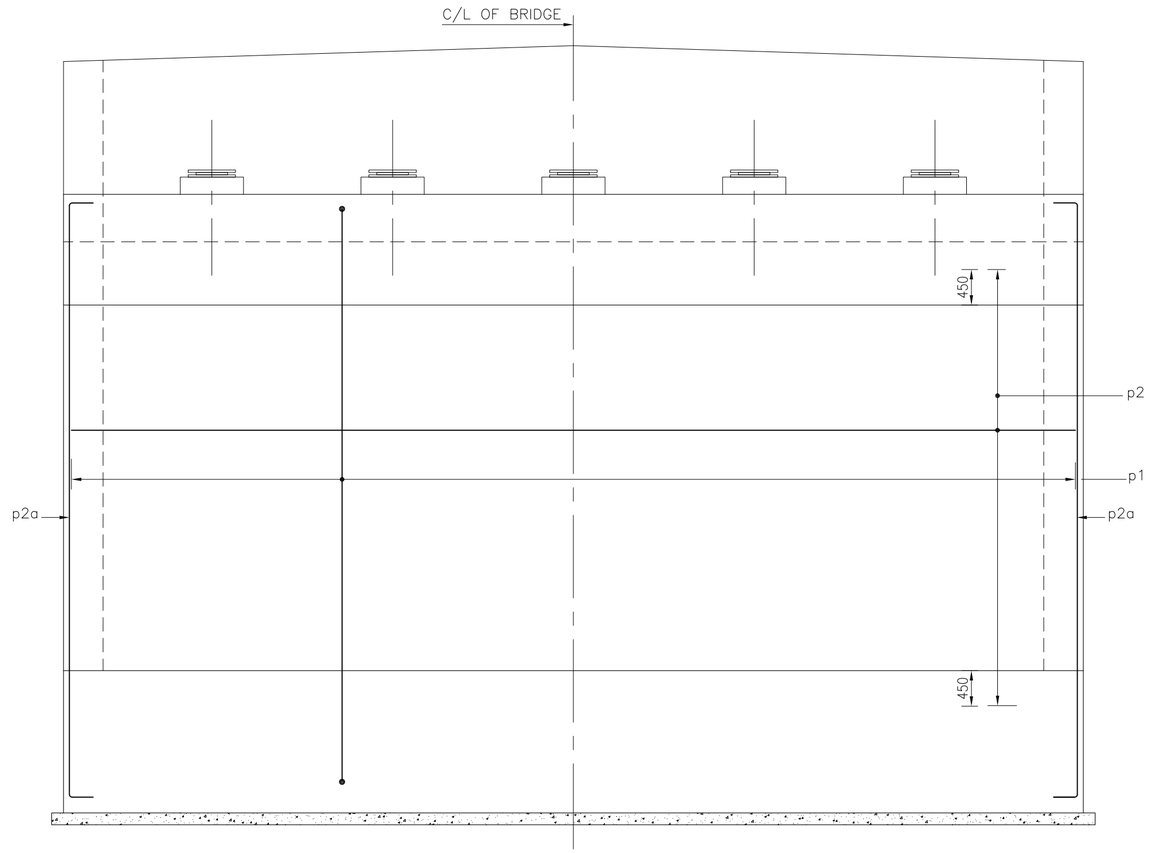

SECTION 1–1
(SCALE 1:50)

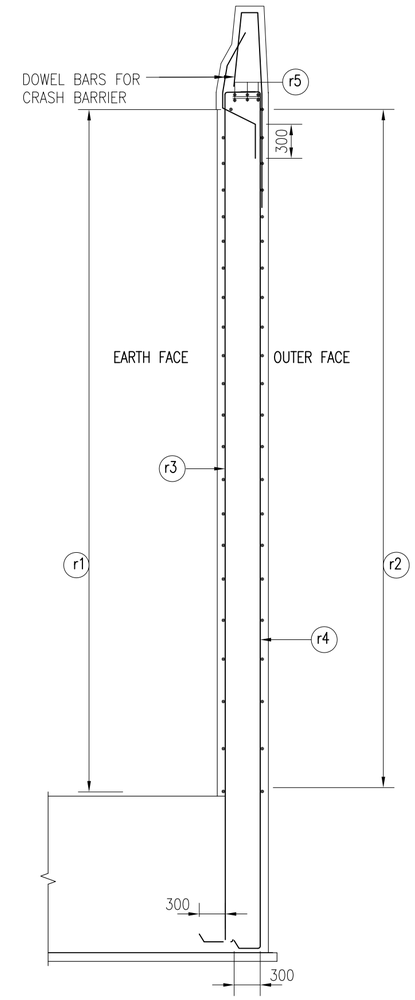

SECTION 3–3
(SCALE 1:50)

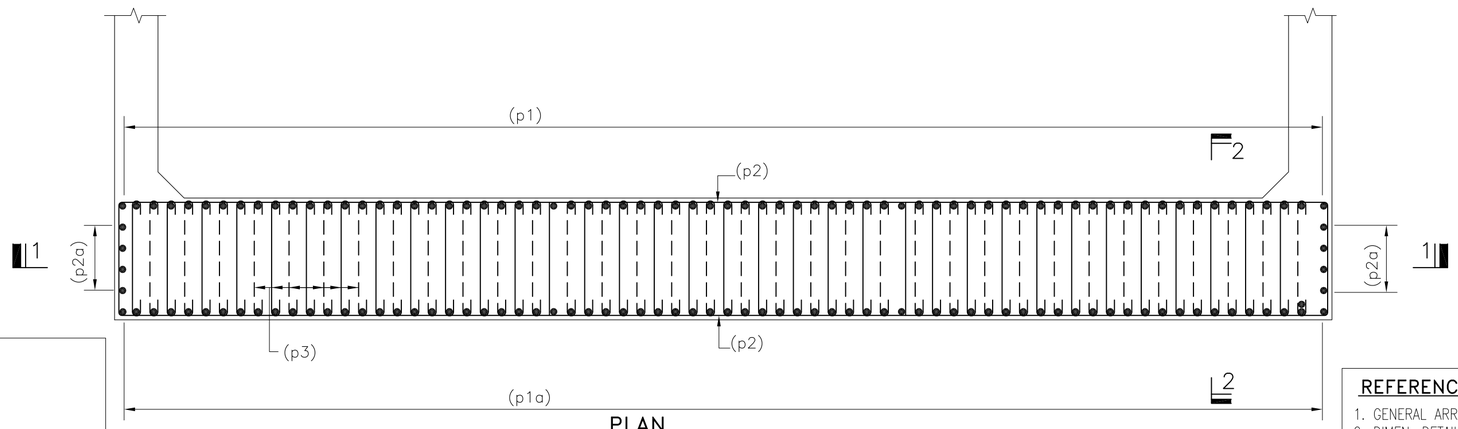

PLAN
(SCALE 1:50)

NOTES:

1. ALL DIMENSIONS ARE IN MILLIMETRES, UNLESS OTHERWISE MENTIONED. ONLY WRITTEN DIMENSIONS SHALL BE FOLLOWED.
2. FOR ALL OTHER NOTES REFER DRAWING NO.–NHIDCL/JA/STR/MNB/29+150/NU/201

REFERENCE DRAWINGS:–

1. GENERAL ARRANGEMENT DRAWING: –NHIDCL/JA/STR/MNB/29+150/GA/101(2–SHTS)
2. DIMEN. DETAILS OF ABUTMENT: –NHIDCL/JA/STR/MNB/29+150/NU/201
3. REINF. DETAILS OF ABUTMENT: –NHIDCL/JA/STR/MNB/29+150/NU/202(2 OF 2)

REV	DATE	DESCRIPTION	DESIGNED	DRAWN	CHECKED	APPROVED
R0	27.08.21	ISSUED FOR APPROVAL	VJ	MPT	GMS	GMS

CLIENT:
NATIONAL HIGHWAYS & INFRASTRUCTURE DEVELOPMENT CORPORATION LTD.
PTI BUILDING, 4 PARLIAMENT STREET SANSAD MARG AREA, NEW DELHI-110001

DESIGN CONSULTANTS :
ANANDJIWALA INFRA ADVISORY
9, SHIVRANJANI SHOPPING CENTER, ON 132 FEET RING ROAD, NR. SHIVRANJANI CRROSS ROAD, SATELLITE, AHMEDABAD-380015
Email: anandjiwalainfra@gmail.com

PROJECT :
CONSULTANCY SERVICES FOR FEASIBILITY STUDY, PREPARATION OF DETAILED PROJECT REPORT AND PROVIDING PRE-CONSTRUCTION SERVICES FOR UPGRADATION OF EXISTING 2-LANE HIGHWAY TO 4-LANE WITH PAVED SHOULDER CONFIGURATION (NH-144A) FROM KM 26.350 (KHATI CHOWK) TO KM 30.097 (HANUMAN CHOWK) OF JAMMU-AKHNOOR SECTION IN THE UNION TERRITORY OF JAMMU & KASHMIR ON EPC BASIS

DESIGNED	VJ
DRAWN	MPT
CHECKED	GMS
APPROVED	GMS
DATE	27.08.2021
SCALE:	AS SHOWN

TITLE : RECONSTRUCTION OF MINOR BRIDGE AT DESIGN CH:29+150.000 REINFORCEMENT DETAILS OF ABUTMENT - A1 & A2

REV. R0
SIZE A2

DRAWING NO : NHIDCL/JA/STR/MNB/29+150/NU/202

SHEET 01 OF 02

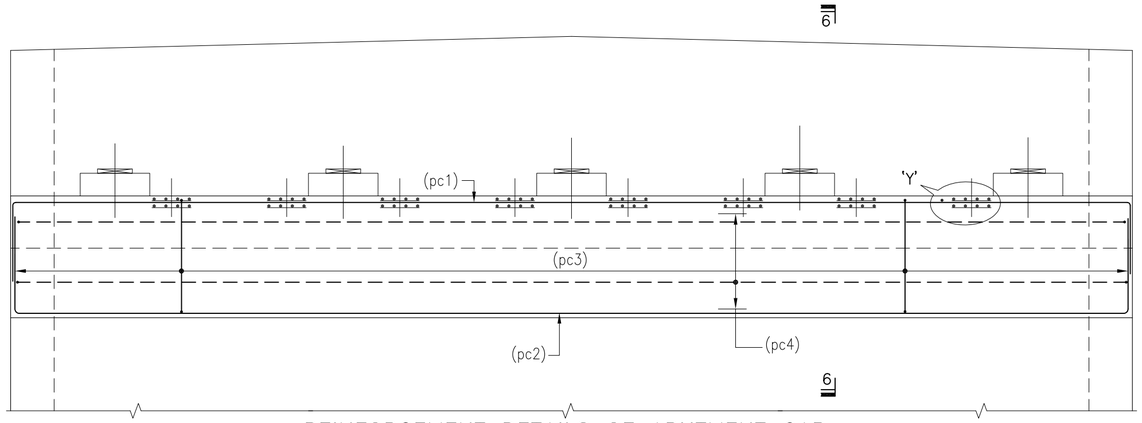

REINFORCEMENT DETAILS OF ABUTMENT CAP

(SCALE 1:50)

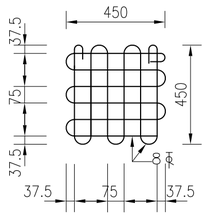

DETAIL OF MESH

(UNDER JACK LOCATION)
(TYPE A)
SCALE 1:20

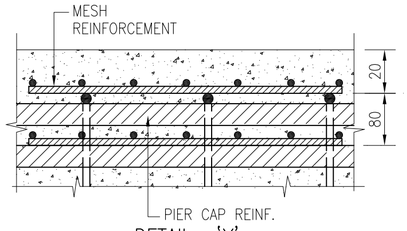

DETAIL 'Y'

SCALE 1:5

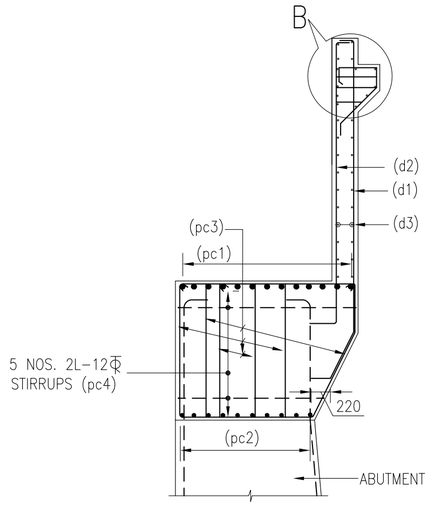

SECTION 6–6

(SCALE 1:50)

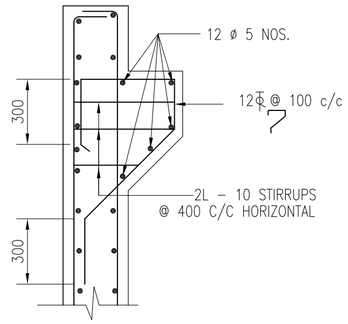

DETAIL AT B

(SCALE 1:20)

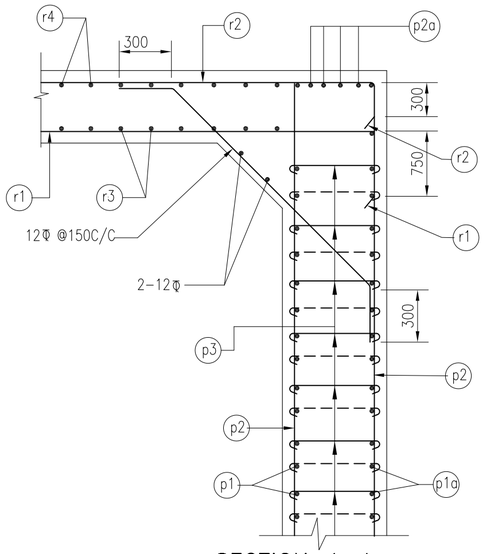

SECTION 4–4

JUNCTION DETAILS OF RCC
ABUTMENT AND SOLID RETURN WALL
(SCALE 1:50)

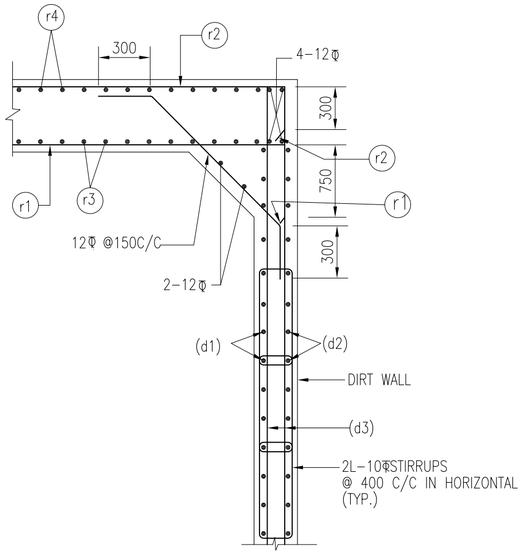

SECTION 5–5

JUNCTION DETAILS OF RCC
RETURN AND DIRT WALL
(SCALE 1:50)

SCHEDULE OF REINFORCEMENT

SL. No.	Bar Mark	Bar Shape	ABUTMENT A1 Bar dia	ABUTMENT A1 Nos / Spacing
1	p1		25Φ	125 NOS.
2	p1a		16Φ	125 NOS.
3	p2		12Φ	@ 100 c/c
4	p2a		12Φ	2x7=14 NOS.
5	p3		10Φ	ALTERNATE BARS IN EACH LAYER STAGGERED VERTI.
6	pc1		16Φ	@ 125 c/c
7	pc2		16Φ	@ 125 c/c
8	pc3		12Φ	6L- 200 C/C
9	pc4		12Φ	5-NOS 2L-STIRRUPS
10	r1		20Φ	@ 100 c/c
11	r2		12Φ	@ 100 c/c
12	r3		20Φ	@ 100 c/c
13	r4		12Φ	@ 100 c/c
14	r5		20Φ	05 NOS.
15	f1		25Φ	@ 100 c/c
16	f2		12Φ	@ 100 c/c
17	f3		25Φ	@ 100 c/c
18	f4		12Φ	@ 100 c/c
19	f5		12Φ	@ 150 c/c
20	f6		12Φ	@ 150 c/c
21	d1		12Φ	@ 100 c/c
22	d2		10Φ	@ 150 c/c
23	d3		10Φ	@ 200 c/c

REFERENCE DRAWINGS:–

1. GENERAL ARRANGEMENT DRAWING: –NHIDCL/JA/STR/MNB/29+150/GA/101(2–SHTS)
2. DIMEN. DETAILS OF ABUTMENT: –NHIDCL/JA/STR/MNB/29+150/NU/201
3. REINF. DETAILS OF ABUTMENT: –NHIDCL/JA/STR/MNB/29+150/NU/202(1 OF 2)

REV	DATE	DESCRIPTION	DESIGNED	DRAWN	CHECKED	APPROVED
R0	27.08.21	ISSUED FOR APPROVAL	VJ	MPT	GMS	GMS

CLIENT:
NATIONAL HIGHWAYS & INFRASTRUCTURE DEVELOPMENT CORPORATION LTD.
PTI BUILDING, 4 PARLIAMENT STREET
SANSAD MARG AREA, NEW DELHI-110001

DESIGN CONSULTANTS :
ANANDJIWALA INFRA ADVISORY
9, SHIVRANJANI SHOPPING CENTER, ON 132 FEET RING ROAD, NR. SHIVRANJANI CRROSS ROAD, SATELLITE, AHMEDABAD-380015
Email: anandjiwalainfra@gmail.com

PROJECT :
CONSULTANCY SERVICES FOR FEASIBILITY STUDY, PREPARATION OF DETAILED PROJECT REPORT AND PROVIDING PRE-CONSTRUCTION SERVICES FOR UPGRADATION OF EXISTING 2-LANE HIGHWAY TO 4-LANE WITH PAVED SHOULDER CONFIGURATION (NH-144A) FROM KM 26.350 (KHATI CHOWK) TO KM 30.097 (HANUMAN CHOWK) OF JAMMU-AKHNOOR SECTION IN THE UNION TERRITORY OF JAMMU & KASHMIR ON EPC BASIS

DESIGNED	VJ	
DRAWN	MPT	
CHECKED	GMS	
APPROVED	GMS	
DATE 27.08.2021	SCALE: AS SHOWN	

TITLE : RECONSTRUCTION OF MINOR BRIDGE AT DESIGN CH:29+150.000 REINFORCEMENT DETAILS OF ABUTMENT - A1 & A2

REV. R0
SIZE A2

DRAWING NO : NHIDCL/JA/STR/MNB/29+150/NU/202

SHEET 02 OF 02

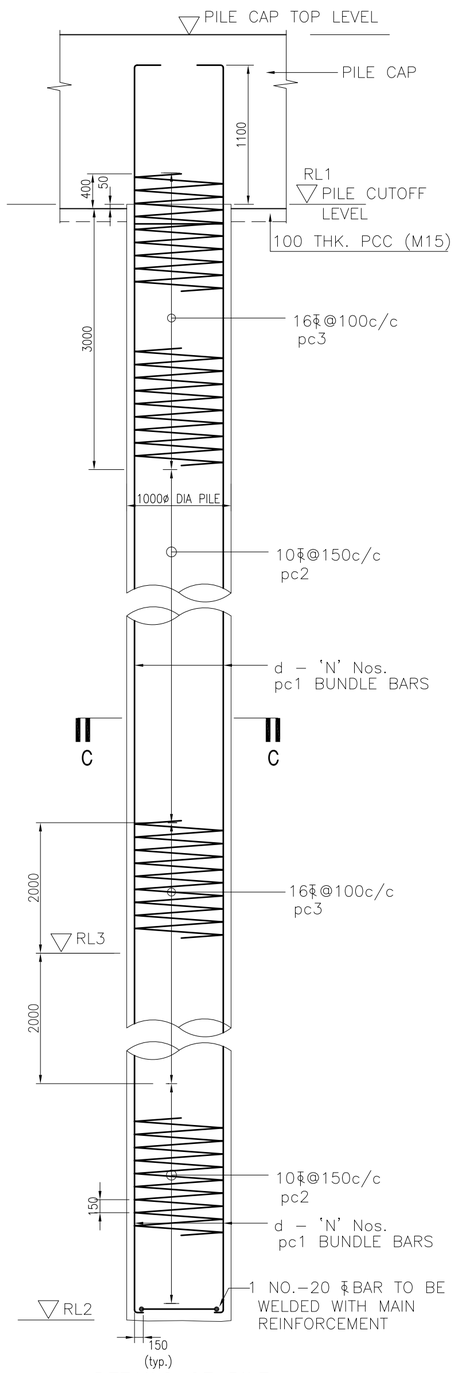

DETAILS OF PILE

SCALE 1:50

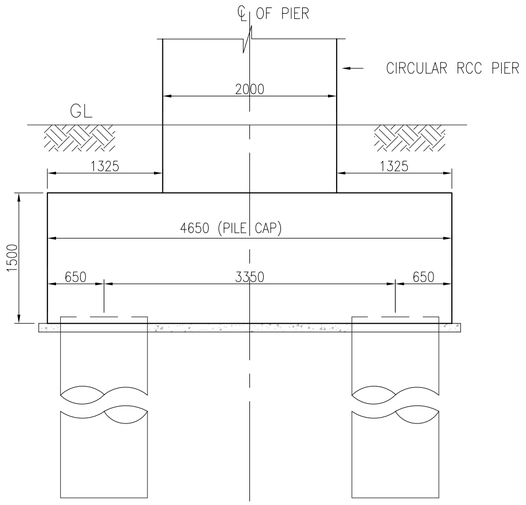

SECTION A-A

(SCALE 1:50)

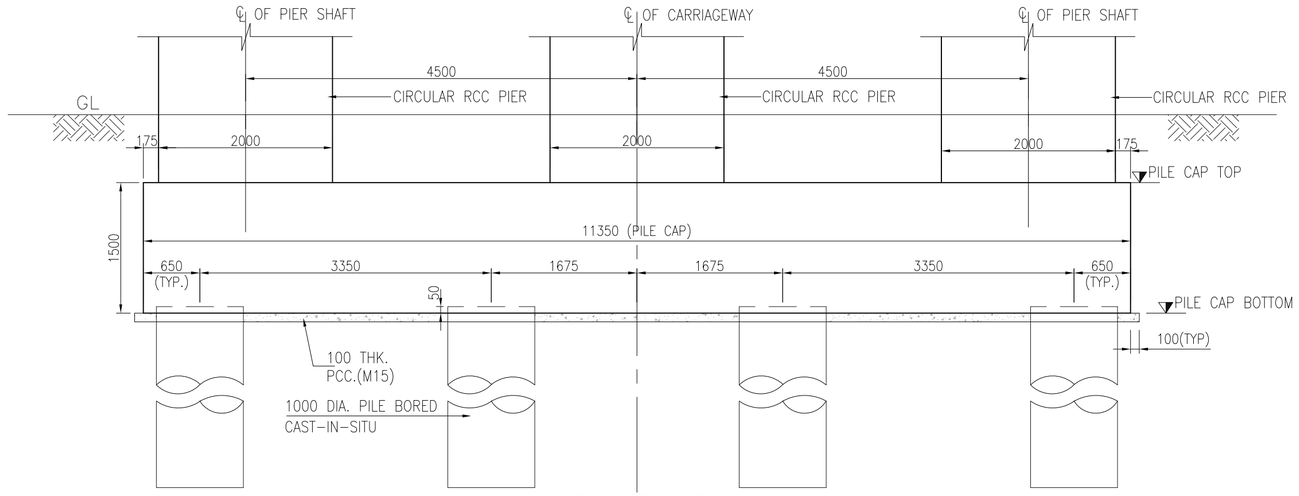

SECTION B-B

(SCALE 1:50)

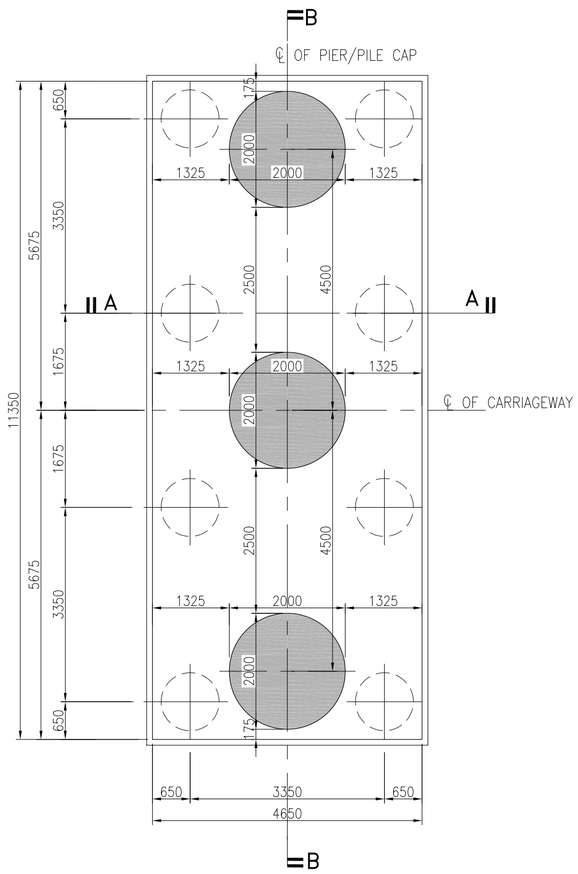

DIMENSION DETAILS OF PILE CAP

(SCALE 1:75)

PILE REINFORCEMENT

PIER LOCATION	d ϕ	'N' NOS.	RL1	RL2	RL3 (LEVEL OF SCOUR)
P1	25	2x13=26 BUNDLE BARS	343.806	328.756	339.740

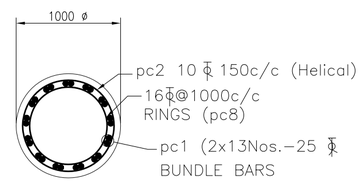

SECTION C–C

SCALE: 1:50

NOTES:–

1. ALL DIMENSIONS ARE IN MILLIMETRES & LEVELS ARE IN METRES UNLESS OTHERWISE MENTIONED. ONLY WRITTEN DIMENSIONS SHALL BE FOLLOWED.
2. GRADE OF CONCRETE M35 FOR PILE & PILE CAP & M15 FOR PCC LEVELLING COURSE. REINFORCEMENT SHALL BE GRADE TMT BARS OF DESIGNATION Fe500 CONFORMING TO IS:1786 STANDARD WITH A MINIMUM YIELD STRENGTH OF 500 N/sq.mm.
3. CLEAR COVER TO PILE REINFORCEMENT SHALL BE 75mm.
4. PILE SHALL BE INSTALLED USING BENTONITE SLURRY OF PROPER CONSISTENCY & WITH THE SAME TYPE OF EQUIPMENT & CONSTRUCTION PROCEDURE THAT ARE PROPOSED TO BE ADOPTED FOR THE WORKING PILES.
5. CONCRETING FOR PILE SHALL BE CARRIED OUT IN A SINGLE CONTINUOUS OPERATION. NO CONSTRUCTION JOINTS SHALL BE PERMITTED IN A PILE. TREMIE CONCRETING SHALL BE RESORTED TO THE TOTAL TIME OF TREMIE CONCRETING IS TO BE RESTRICTED WITHIN 4 HOURS FROM START TO COMPLETION.THIS MAY BE EXCEEDED TO MAXIMUM 6 HOURS SUBJECT TO APPROVAL FROM IC.
6. THE PILE BORING, BORE STABILISATION, CONCRETING ..etc. SHALL BE CARRIED OUT STRICTLY IN ACCORDANCE WITH CLAUSE 1107 OF THE MoRT&H SPECIFICATION.
7. TEMPORARY STEEL CASING WITH NECESSARY GUIDE COLLAR MAY BE PROVIDED DOWN TO 3.0m BELOW GROUND LEVEL AS PER THE SITE REQUIREMENT FOR CONSTRUCTION PURPOSE.
8. THE BOTTOM OF THE HOLE SHALL BE THOROUGHLY CLEANED BY EMPLOYING SUITABLE MEANS AND LEVELS TAKEN INCLUDING AT THE BOREHOLE BOTTOM TO CONFIRM CORRECTNESS OF THE SHAFT LENGTH.
9. THE PERMISSIBLE TOLERANCES IN PILE INSTALLATION SHALL CONFORM TO CLAUSE 1116 OF Mort&H SPECIFICATION AND CLAUSE 709 OF IRC:78–2014.
11. THE TRIMMING OF PILE HEAD SHALL BE COMPLETED BETWEEN 4 TO 7 DAYS OF CASTING AND SHALL BE DONE CAREFULLY & CAUTIOUSLY TO AVOID DAMAGE TO THE REST OF THE PILE.
12. SLUMP FOR PILE CONCRETING SHALL BE 150mm TO 200mm AS PER MoRT&H & IRC SPECIFICATION.
13. ALTERNATIVELY BAR SPLICE COUPLER CAN ALSO BE USED FOR REBAR LAPPING & SPLICING. LAP LENGTH OF THE REINFORCEMENT SHALL BE 56 TIMES THE DIA OF BAR.
14. PILES SHALL BE VERTICAL, BORED CAST–IN–SITU.
15. THE TIP LEVEL OF PILE SHOWN IS AS PER GEOTECH REPORT. THE SOIL OBTAINED AT THE TERMINATION DEPTH IS VISUALLY EXAMINED AND CROSS CHECKED AGAINST THE SOIL PROFILE LOG BEFORE TERMINATING THE PILES.
16. THE SAFE LOAD CAPACITY OF PILE:
    VERTICAL CAPACITY = 400T
    LATERAL CAPACITY = 40T

REFERENCE DRAWINGS:–

1. GENERAL ARRANGEMENT DRAWING :–NHIDCL/JA/STR/MNB/29+150/GA/101
2. REIN. DETAILS OF PILE CAP PIER–P1 :–NHIDCL/JA/STR/MNB/29+150/NU/302
3. DIMEN. DETAILS OF PIER–P1 :–NHIDCL/JA/STR/MNB/29+150/NU/303
4. REIN. DETAILS OF PIER–P1 :–NHIDCL/JA/STR/MNB/29+150/NU/304

REV	DATE	DESCRIPTION	DESIGNED	DRAWN	CHECKED	APPROVED
R0	27.08.21	ISSUED FOR APPROVAL	BJS	BJP	GMS	GMS

CLIENT: NATIONAL HIGHWAYS & INFRASTRUCTURE DEVELOPMENT CORPORATION LTD.
PTI BUILDING, 4 PARLIAMENT STREET SANSAD MARG AREA, NEW DELHI-110001

DESIGN CONSULTANTS : ANANDJIWALA INFRA ADVISORY
9, SHIVRANJANI SHOPPING CENTER, ON 132 FEET RING ROAD, NR. SHIVRANJANI CRROSS ROAD, SATELLITE, AHMEDABAD-380015
Email: anandjiwalainfra@gmail.com

PROJECT : CONSULTANCY SERVICES FOR FEASIBILITY STUDY, PREPARATION OF DETAILED PROJECT REPORT AND PROVIDING PRE-CONSTRUCTION SERVICES FOR UPGRADATION OF EXISTING 2-LANE HIGHWAY TO 4-LANE WITH PAVED SHOULDER CONFIGURATION (NH-144A) FROM KM 26.350 (KHATI CHOWK) TO KM 30.097 (HANUMAN CHOWK) OF JAMMU-AKHNOOR SECTION IN THE UNION TERRITORY OF JAMMU & KASHMIR ON EPC BASIS

DESIGNED	BJS
DRAWN	BJP
CHECKED	GMS
APPROVED	GMS
DATE	27.08.2021
SCALE:	AS SHOWN

TITLE : RECONSTRUCTION OF MINOR BRIDGE AT DESIGN CH:29+150.000 DIMENSIONAL DETAILS OF PILE & PILE CAP FOR PIER-P1

REV. R0

SIZE A2

DRAWING NO : NHIDCL/JA/STR/MNB/29+150/NU/301

SHEET 01 OF 01

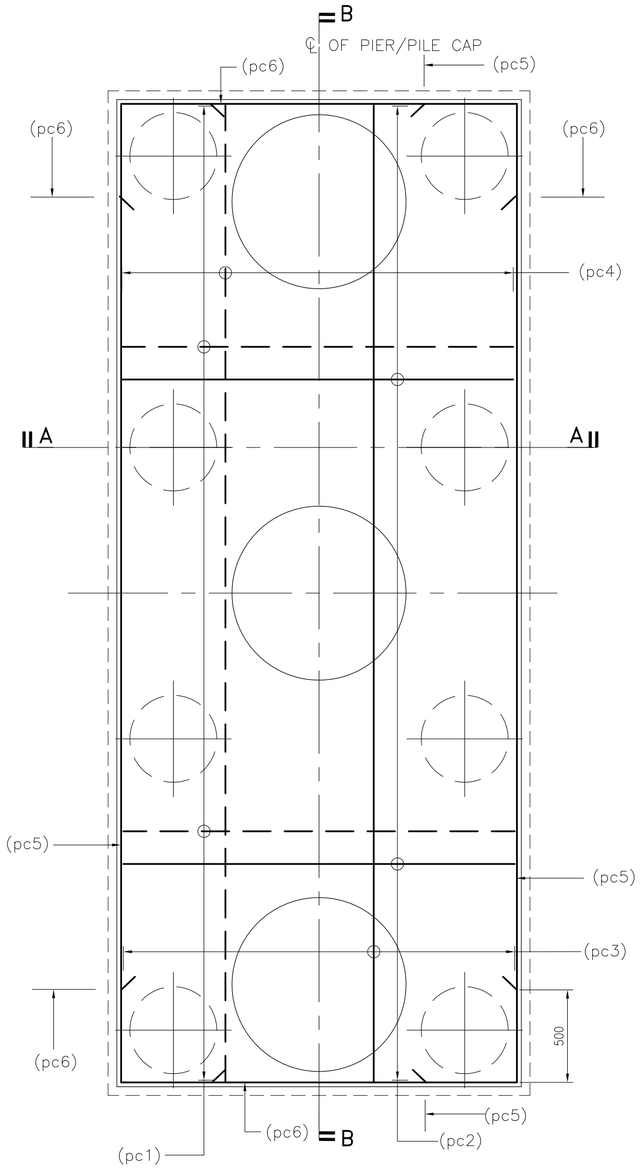

REINFORCEMENT DETAILS OF PILE CAP
(SCALE 1:50)

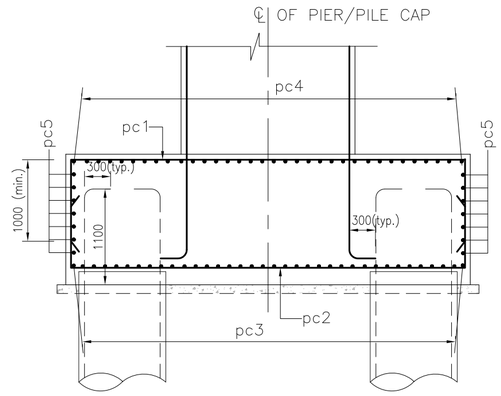

SECTION A-A
SCALE: 1:50

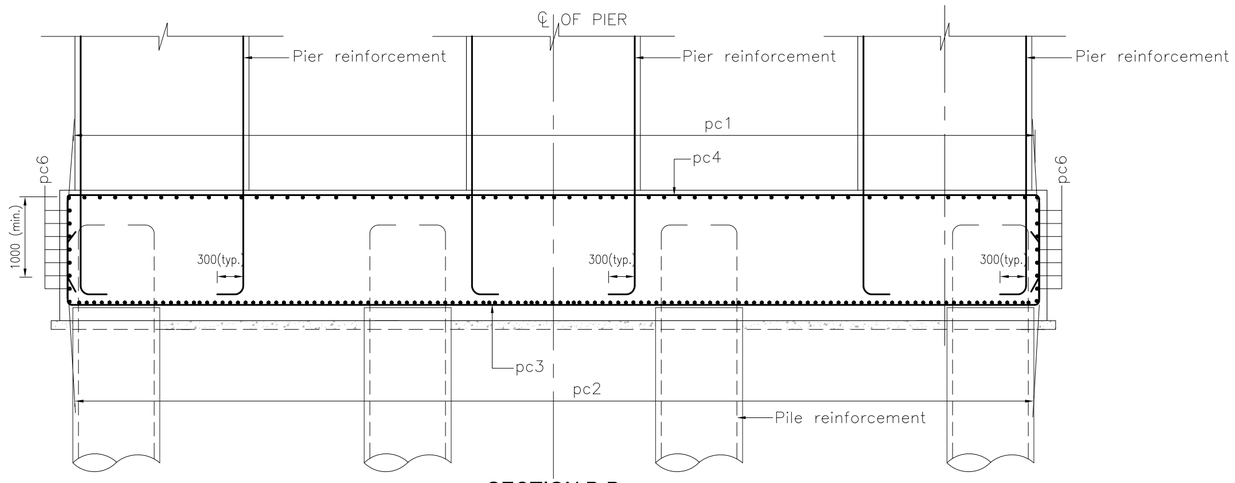

SECTION B-B
SCALE: 1:50

SCHEDULE OF REINFORCEMENT

SL. No.	Bar Mark	Bar Shape	Bar dia	Nos/Spacing
1	pc1	1000 1000	12Φ	100 C/C
2	pc2	1000 1000	20Φ	100 C/C
3	pc3	1000 1000	20Φ	100 C/C
4	pc4	1000 1000	12Φ	100 C/C
5	pc5	500 500	12Φ	150 C/C
6	pc6	500 500	12Φ	150 C/C

LEGEND:-

TOP REINFORCEMENT
BOTTOM REINFORCEMENT
TYP. = TYPICAL
PCC = PLAIN CEMENT CONCRETE.

NOTES:

1. ALL DIMENSIONS ARE IN MILLIMETRES AND LEVELS ARE IN METRES UNLESS NOTED OTHERWISE.
2. FOR ALL OTHER NOTES REFER DRAWING NO. -NHIDCL/JA/STR/MNB/29+150/NU/301

REFERENCE DRAWINGS:-

1. GENERAL ARRANGEMENT DRAWING :-NHIDCL/JA/STR/MNB/29+150/GA/101
2. DIMEN. DETAILS OF PILE & PILECAP PIER-P1 :-NHIDCL/JA/STR/MNB/29+150/NU/301
3. DIMEN. DETAILS OF PIER-P1 :-NHIDCL/JA/STR/MNB/29+150/NU/303
4. REIN. DETAILS OF PIER-P1 :-NHIDCL/JA/STR/MNB/29+150/NU/304

REV	DATE	DESCRIPTION	DESIGNED	DRAWN	CHECKED	APPROVED
R0	27.08.21	ISSUED FOR APPROVAL	BJS	BJP	GMS	GMS

CLIENT:
NATIONAL HIGHWAYS & INFRASTRUCTURE DEVELOPMENT CORPORATION LTD.
PTI BUILDING, 4 PARLIAMENT STREET
SANSAD MARG AREA, NEW DELHI-110001

DESIGN CONSULTANTS :
ANANDJIWALA INFRA ADVISORY
9, SHIVRANJANI SHOPPING CENTER, ON 132 FEET RING ROAD, NR. SHIVRANJANI CRROSS ROAD, SATELLITE, AHMEDABAD-380015
Email: anandjiwalainfra@gmail.com

PROJECT :
CONSULTANCY SERVICES FOR FEASIBILITY STUDY, PREPARATION OF DETAILED PROJECT REPORT AND PROVIDING PRE-CONSTRUCTION SERVICES FOR UPGRADATION OF EXISTING 2-LANE HIGHWAY TO 4-LANE WITH PAVED SHOULDER CONFIGURATION (NH-144A) FROM KM 26.350 (KHATI CHOWK) TO KM 30.097 (HANUMAN CHOWK) OF JAMMU-AKHNOOR SECTION IN THE UNION TERRITORY OF JAMMU & KASHMIR ON EPC BASIS

DESIGNED	BJS
DRAWN	BJP
CHECKED	GMS
APPROVED	GMS
DATE 27.08.2021	SCALE: AS SHOWN

TITLE :
RECONSTRUCTION OF MINOR BRIDGE AT DESIGN CH:29+150.000 REINFORCEMENT DETAILS OF PILE & PILE CAP FOR PIER-P1

REV. R0
SIZE A2

DRAWING NO :
NHIDCL/JA/STR/MNB/29+150/NU/302

SHEET 01 OF 01

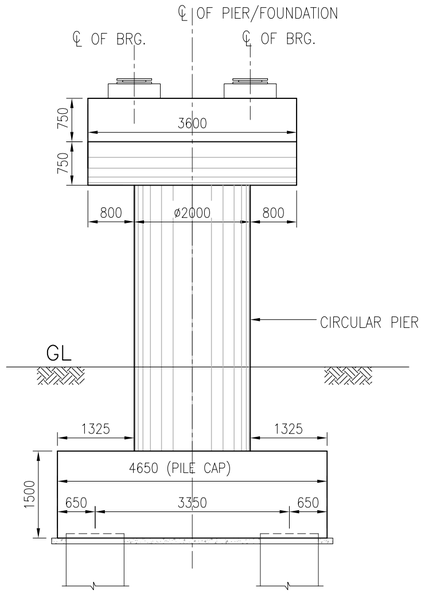

SECTION X–X
(SCALE 1:75)

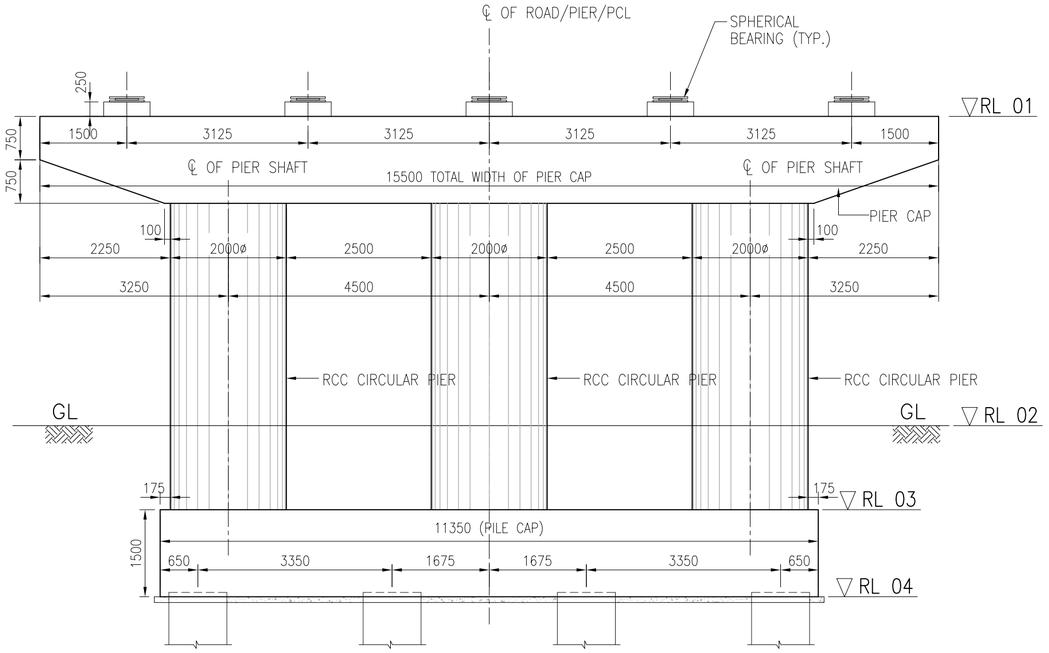

SECTION Y–Y
(SCALE 1:75)

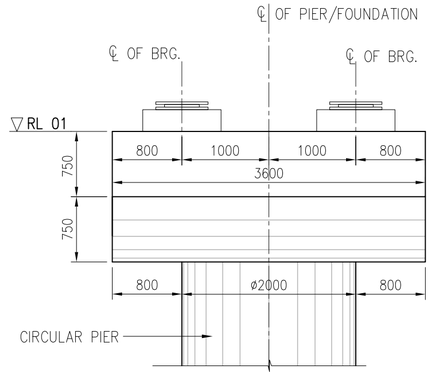

SECTION A–A
(SCALE 1:50)

PIER LOCATION	RL 01	RL 02	RL 03	RL 04
P1	351.225	345.746	345.256	343.756

* THESE LEVEL ARE WORKED OUT WITH ASSUMPTION OF 250mm THICKNESS OF MIN. PEDESTAL & 200mm THICKNESS FOR BEARING.

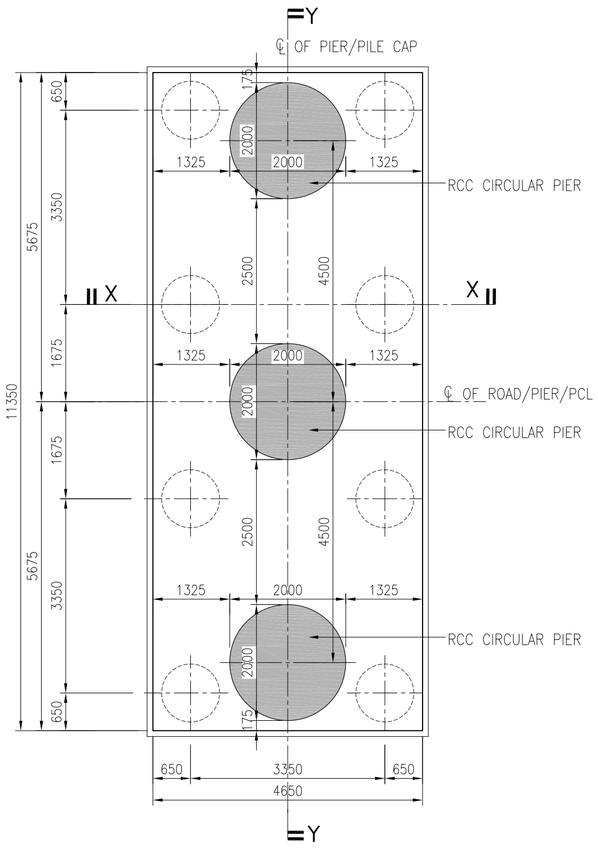

FOUNDATION PLAN FOR PIER
(SCALE 1:75)

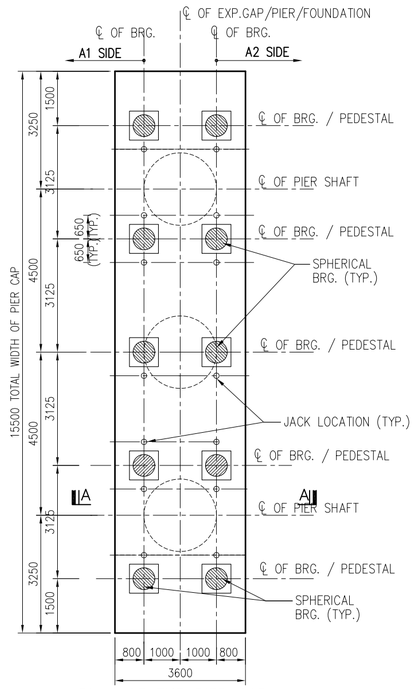

PLAN OF THE PIER CAP
(SCALE 1:100)

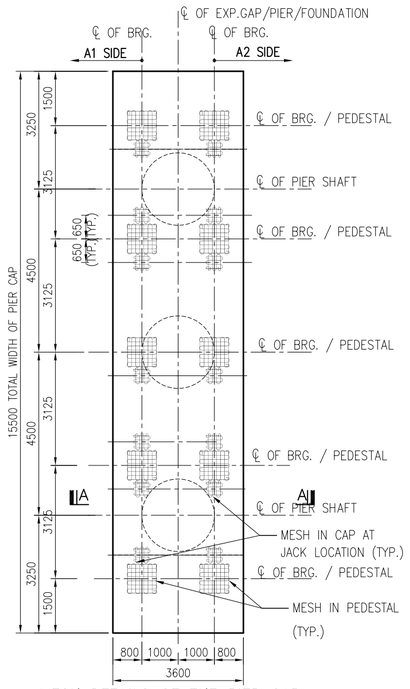

MESH DETAILS OF THE PIER CAP
(SCALE 1:100)

NOTES:

1. ALL DIMENSIONS ARE IN mm. UNLESS OTHERWISE MENTIONED. ONLY WRITTEN DIMENSIONS ARE TO BE FOLLOWED.NO DIMENSION IS TO BE SCALED.
2. ALL UNTENSIONED REINFORCEMENT SHALL BE GRADE TMT BARS OF DESIGNATION Fe 500 CONFORMING TO IS:1786 STANDARD WITH A MINIMUM YIELD STRENGTH 500 N/sq.mm.
3. THE CONCRETE SHALL BE DESIGN MIX AND 28 DAYS CHARACTERISTIC STRENGTH FOR VARIOUS COMPONENTS SHALL BE AS UNDER.
   PIER CAP ---------- M 35
   SUBSTRUCTURE ---------- M 35
   FOUNDATION ---------- M 35
   PCC LEVELLING COURSE ---------- M 15
4. THE BRIDGE LIES IN SEISMIC ZONE – IV
5. LAP LENTH OF THE STEEL SHALL BE PROVIDED AS BELOW :
   LAP LENGTH = α x k x BAR DIA (ø)
   ANCHORAGE LENGTH = k x BAR DIA (ø)
   α =1.00 WHERE <25% LAPPED BAR RELATIVE TO TOTAL CROSS SECTIONAL AREA.
   α =1.15 WHERE 33% LAPPED BAR RELATIVE TO TOTAL CROSS SECTIONAL AREA.
   α =1.40 WHERE 50% LAPPED BAR RELATIVE TO TOTAL CROSS SECTIONAL AREA.
   α =1.50 WHERE >50% LAPPED BAR RELATIVE TO TOTAL CROSS SECTIONAL AREA.

GRADE OF CONCRETE	M25	M30	M35	M40	M45	M50
k	47	40	36	34	32	29

6. THE COVER TO OUTERMOST REINFORCEMENT IN SUBSTRUCTURE AND FOOTING SHALL BE 50 AND 75mm RESPECTIVELY.

REFERENCE DRAWINGS:–

1. GENERAL ARRANGEMENT DRAWING :–NHIDCL/JA/STR/MNB/29+150/GA/101(2–SHTS)
2. DIMEN. DETAILS OF PILE & PILE CAP PIER–P1 :–NHIDCL/JA/STR/MNB/29+150/NU/301
3. REIN. DETAILS OF PILE CAP PIER–P1 :–NHIDCL/JA/STR/MNB/29+150/NU/302
4. REIN. DETAILS OF PIER–P1 :–NHIDCL/JA/STR/MNB/29+150/NU/304

REV	DATE	DESCRIPTION	DESIGNED	DRAWN	CHECKED	APPROVED
R0	27.08.21	ISSUED FOR APPROVAL	BJS	BJP	GMS	GMS

CLIENT:
NATIONAL HIGHWAYS & INFRASTRUCTURE DEVELOPMENT CORPORATION LTD.
PTI BUILDING, 4 PARLIAMENT STREET SANSAD MARG AREA, NEW DELHI-110001

DESIGN CONSULTANTS :
ANANDJIWALA INFRA ADVISORY
9, SHIVRANJANI SHOPPING CENTER, ON 132 FEET RING ROAD, NR. SHIVRANJANI CRROSS ROAD, SATELLITE, AHMEDABAD-380015
Email: anandjiwalainfra@gmail.com

PROJECT :
CONSULTANCY SERVICES FOR FEASIBILITY STUDY, PREPARATION OF DETAILED PROJECT REPORT AND PROVIDING PRE-CONSTRUCTION SERVICES FOR UPGRADATION OF EXISTING 2-LANE HIGHWAY TO 4-LANE WITH PAVED SHOULDER CONFIGURATION (NH-144A) FROM KM 26.350 (KHATI CHOWK) TO KM 30.097 (HANUMAN CHOWK) OF JAMMU-AKHNOOR SECTION IN THE UNION TERRITORY OF JAMMU & KASHMIR ON EPC BASIS

DESIGNED	BJS	
DRAWN	BJP	
CHECKED	GMS	
APPROVED	GMS	
DATE 27.08.2021	SCALE: AS SHOWN	

TITLE : RECONSTRUCTION OF MINOR BRIDGE AT DESIGN CH:29+150.000 DIMENSIONAL DETAILS OF PIER-P1

REV. R0
SIZE A2

DRAWING NO : NHIDCL/JA/STR/MNB/29+150/NU/303

SHEET 01 OF 01

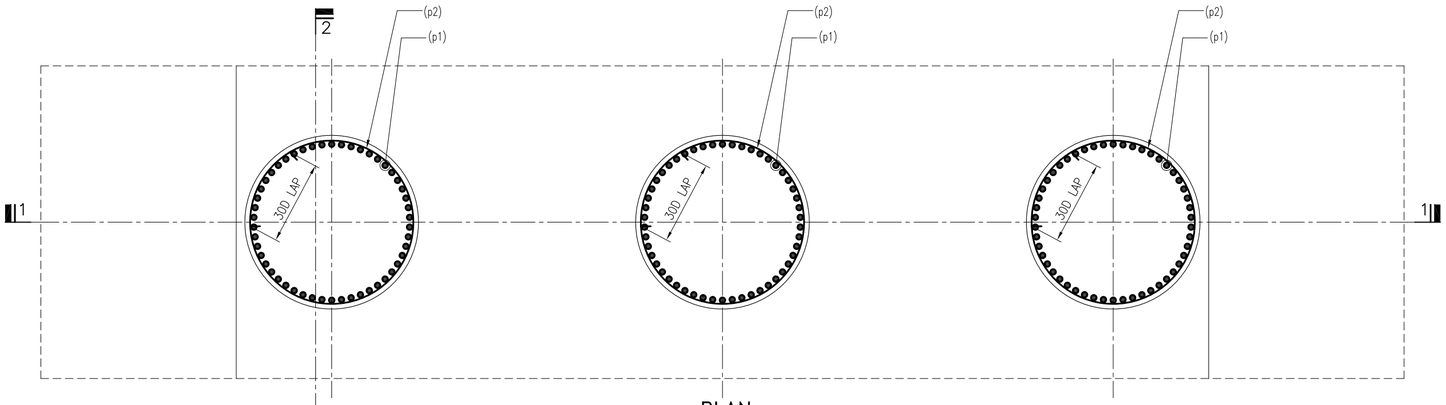

PLAN
(N.T.S.)

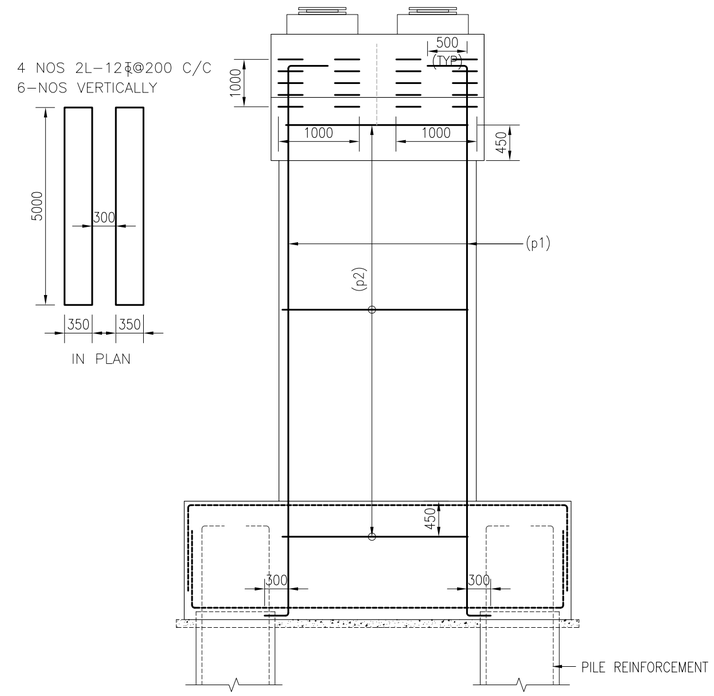

SECTION 2-2
(N.T.S.)

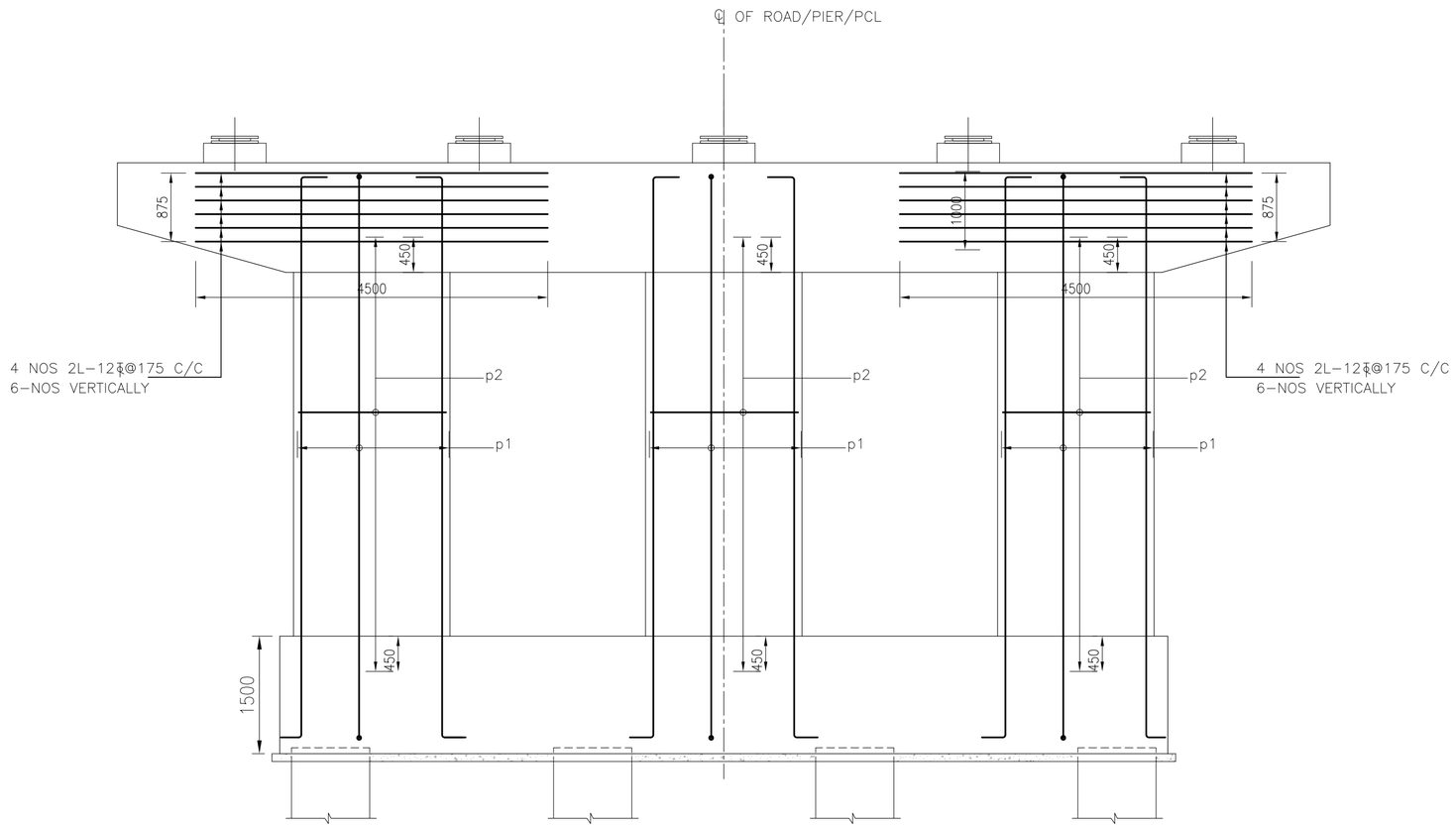

NOTES:

1. ALL DIMENSIONS ARE IN MILLIMETRES, UNLESS OTHERWISE MENTIONED. ONLY WRITTEN DIMENSIONS SHALL BE FOLLOWED.
2. FOR ALL OTHER NOTES REFER DRAWING NO.-NHIDCL/JA/STR/MNB/29+150/NU/303

REFERENCE DRAWINGS:-

1. GENERAL ARRANGEMENT DRAWING :-NHIDCL/JA/STR/MNB/29+150/GA/101(2-SHTS)
2. DIMEN. DETAILS OF PIER-P1 :-NHIDCL/JA/STR/MNB/29+150/NU/303
3. REINFT. DETAILS OF PIER-P1 :-NHIDCL/JA/STR/MNB/29+150/NU/302(02 OF 02)

REV	DATE	DESCRIPTION	DESIGNED	DRAWN	CHECKED	APPROVED
R0	27.08.21	ISSUED FOR APPROVAL	BJS	BJP	GMS	GMS

CLIENT:
NATIONAL HIGHWAYS & INFRASTRUCTURE DEVELOPMENT CORPORATION LTD.
PTI BUILDING, 4 PARLIAMENT STREET SANSAD MARG AREA, NEW DELHI-110001

DESIGN CONSULTANTS :
ANANDJIWALA INFRA ADVISORY
9, SHIVRANJANI SHOPPING CENTER, ON 132 FEET RING ROAD, NR. SHIVRANJANI CRROSS ROAD, SATELLITE, AHMEDABAD-380015
Email: anandjiwalainfra@gmail.com

PROJECT :
CONSULTANCY SERVICES FOR FEASIBILITY STUDY, PREPARATION OF DETAILED PROJECT REPORT AND PROVIDING PRE-CONSTRUCTION SERVICES FOR UPGRADATION OF EXISTING 2-LANE HIGHWAY TO 4-LANE WITH PAVED SHOULDER CONFIGURATION (NH-144A) FROM KM 26.350 (KHATI CHOWK) TO KM 30.097 (HANUMAN CHOWK) OF JAMMU-AKHNOOR SECTION IN THE UNION TERRITORY OF JAMMU & KASHMIR ON EPC BASIS

DESIGNED	BJS
DRAWN	BJP
CHECKED	GMS
APPROVED	GMS
DATE	27.08.2021
SCALE:	AS SHOWN

TITLE :
RECONSTRUCTION OF MINOR BRIDGE AT DESIGN CH:29+150.000 REINFORCEMENT DETAILS OF PIER-P1

REV. R0
SIZE A2

DRAWING NO :
NHIDCL/JA/STR/MNB/29+150/NU/304

SHEET 01 OF 02

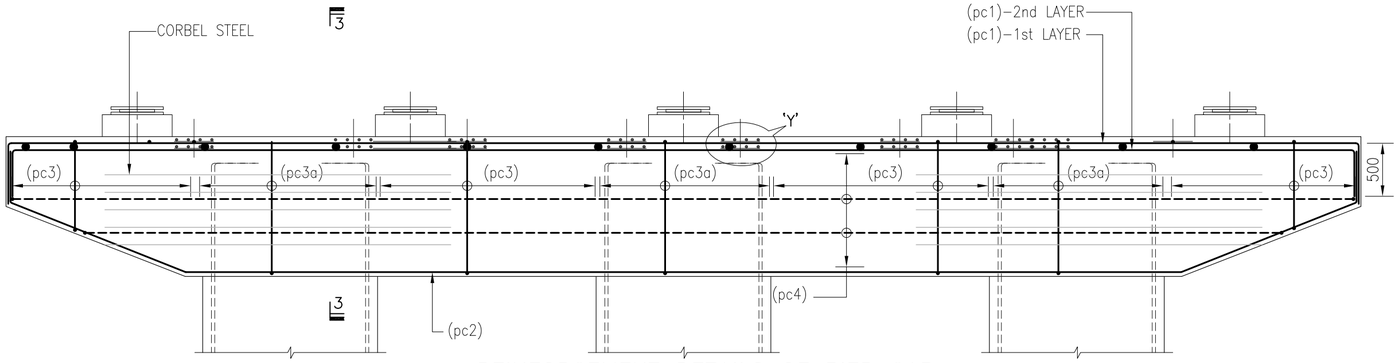

REINFORCEMENT DETAILS OF PIER CAP

(FOR CORBEL STEEL REFER DRAWING NO.302_SH:-1)

(N.T.S.)

SCHEDULE OF REINFORCEMENT

Sr.No.	Bar Mark	Bar Shape	Bar dia	Nos / Spacing
1	p1		25Φ	50 NOS. IN EACH PIER
2	p2	300	20Φ	100 C/C
3	pc1	500 500	20Φ	27X2=54 NOS. in 2-Layers
4	pc2	1100 1100	20Φ	35 NOS.
5	pc3		12Φ	8L- 125 C/C
6	pc3a		12Φ	8L- 150 C/C
7	pc4		16Φ	13-NOS 2L-STIRRUPS

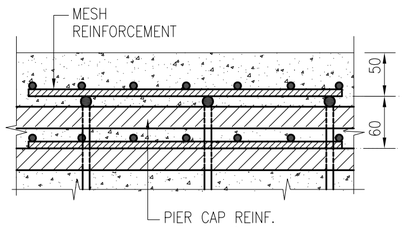

DETAIL 'Y'

(N.T.S.)

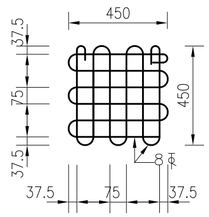

DETAIL OF MESH

(UNDER JACK LOCATION)

(TYPE A)

(N.T.S.)

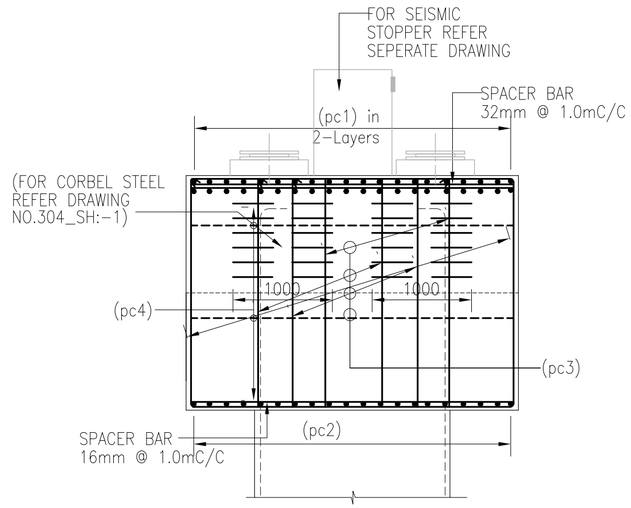

SECTION 3-3

(N.T.S.)

NOTES:

1. ALL DIMENSIONS ARE IN MILLIMETRES, UNLESS OTHERWISE MENTIONED. ONLY WRITTEN DIMENSIONS SHALL BE FOLLOWED.
2. FOR ALL OTHER NOTES REFER DRAWING NO.-NHIDCL/JA/STR/MNB/29+150/NU/303

REFERENCE DRAWINGS:-

1. GENERAL ARRANGEMENT DRAWING :-NHIDCL/JA/STR/MNB/29+150/GA/101(2-SHTS)
2. DIMEN. DETAILS OF PIER-P1 :-NHIDCL/JA/STR/MNB/29+150/NU/303
3. REINFT. DETAILS OF PIER-P1 :-NHIDCL/JA/STR/MNB/29+150/NU/302(01 OF 02)

REV	DATE	DESCRIPTION	DESIGNED	DRAWN	CHECKED	APPROVED
R0	27.08.21	ISSUED FOR APPROVAL	BJS	BJP	GMS	GMS

CLIENT:

NATIONAL HIGHWAYS & INFRASTRUCTURE DEVELOPMENT CORPORATION LTD.

PTI BUILDING, 4 PARLIAMENT STREET
SANSAD MARG AREA, NEW DELHI-110001

DESIGN CONSULTANTS :

ANANDJIWALA INFRA ADVISORY

9, SHIVRANJANI SHOPPING CENTER, ON 132 FEET RING ROAD, NR. SHIVRANJANI CRROSS ROAD, SATELLITE, AHMEDABAD-380015
Email: anandjiwalainfra@gmail.com

PROJECT :

CONSULTANCY SERVICES FOR FEASIBILITY STUDY, PREPARATION OF DETAILED PROJECT REPORT AND PROVIDING PRE-CONSTRUCTION SERVICES FOR UPGRADATION OF EXISTING 2-LANE HIGHWAY TO 4-LANE WITH PAVED SHOULDER CONFIGURATION (NH-144A) FROM KM 26.350 (KHATI CHOWK) TO KM 30.097 (HANUMAN CHOWK) OF JAMMU-AKHNOOR SECTION IN THE UNION TERRITORY OF JAMMU & KASHMIR ON EPC BASIS

DESIGNED	BJS
DRAWN	BJP
CHECKED	GMS
APPROVED	GMS
DATE	27.08.2021
SCALE:	AS SHOWN

TITLE : RECONSTRUCTION OF MINOR BRIDGE AT DESIGN CH:29+150.000 REINFORCEMENT DETAILS OF PIER-P1

REV. R0

SIZE A2

DRAWING NO :

NHIDCL/JA/STR/MNB/29+150/NU/304

SHEET 02 OF 02

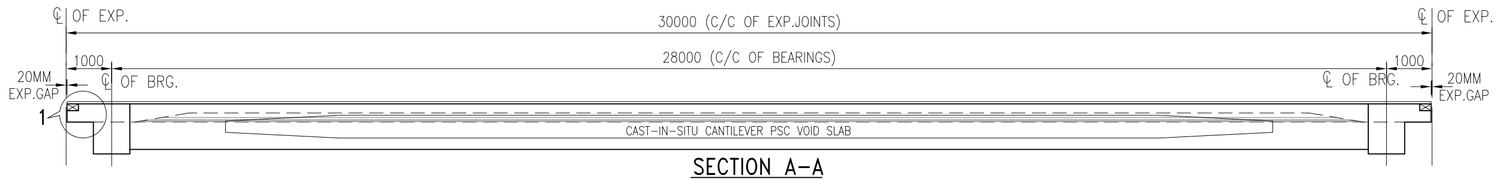

SECTION A-A
(SCALE 1:100)

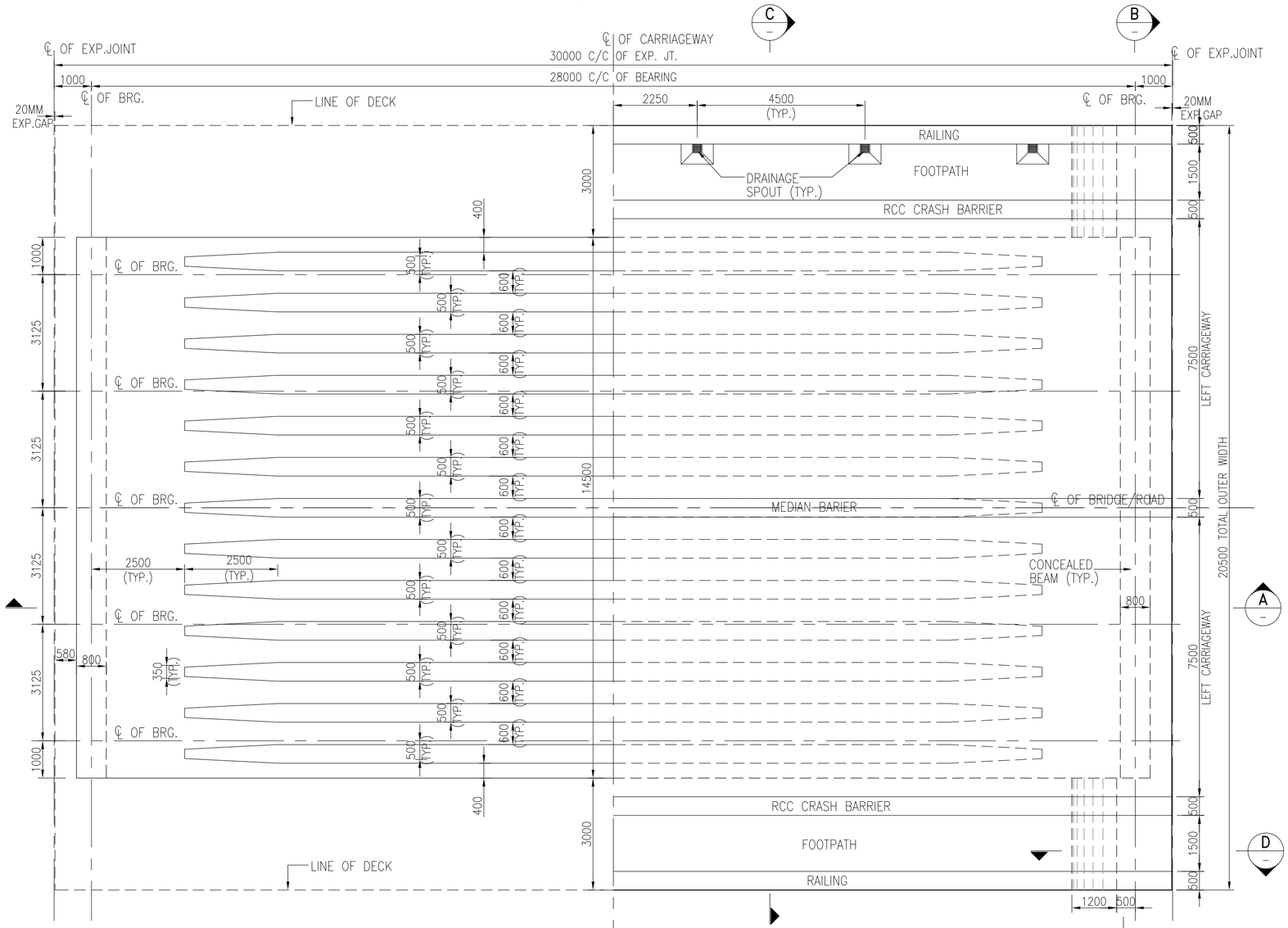

HALF PLAN AT DECK BOTTOM LVL. | HALF PLAN AT DECK TOP LVL.

PLAN
(SCALE 1:100)

NOTES:

1. ALL DIMENSIONS ARE IN mm. UNLESS OTHERWISE MENTIONED. ONLY WRITTEN DIMENSIONS ARE TO BE FOLLOWED.
2. ALL REINFORCEMENT SHALL BE GRADE TMT BARS OF DESIGNATION Fe500 CONFORMING TO IS:1786 STANDARD WITH A MINIMUM YIELD STRENGTH OF 500 N/sq.mm.
3. WEARING COAT SHALL BE 50MM THK. BITUMINOUS CONCRETE WITH 3MM ASPHALT TO SEAL.
4. THE DIMENSIONS AND LEVELS SHOWN IN THIS DRAWING ARE TENTATIVE. FOR DETAILS REFER RESPECTIVE STRUCTURAL & HIGHWAY DETAILED DRAWINGS.
5. CONCRETE SHALL BE DESIGN MIX AND 28 DAYS CHARACTERISTIC STRENGTH FOR VARIOUS COMPONENTS SHALL BE AS UNDER :

CAST-IN-SITU PSC VOID SLAB	M 50
CONCEALED BEAM	M 50
CRASH BARRIER	M 40
APPROCH SLAB	M 30
PCC LEVELLING COURSE	M 15

6. THE CLEAR COVER FOR VOID SLAB SHALL BE 40MM.
7. THE BRIDGE HAS BEEN DESIGNED FOR SINGLE LANE OF IRC CLASS 70R + CLASS A OR THREE LANES OF IRC CLASS A LOADING & SV LOADING WHICHEVER GOVERNS.
8. FOR DETAILS OF CRASH BARRIER, DRAINAGE SPOUT, KERB REFER MISCELLANEOUS DRAWINGS.

REFERENCE DRAWINGS:

1. PSC VOID SLAB CABLE PROFILE –NHIDCL/JA/STR/MNB/29+150/NU/402
2. PSC VOID SLAB REINF. DETAIL –NHIDCL/JA/STR/MNB/29+150/NU/403
3. BEARING DETAIL –NHIDCL/JA/STR/MNB/29+150/NU/501

REV	DATE	DESCRIPTION	DESIGNED	DRAWN	CHECKED	APPROVED
R0	27.08.21	ISSUED FOR APPROVAL	BJS	MPT	GMS	GMS

CLIENT:
NATIONAL HIGHWAYS & INFRASTRUCTURE DEVELOPMENT CORPORATION LTD.
PTI BUILDING, 4 PARLIAMENT STREET SANSAD MARG AREA, NEW DELHI-110001

DESIGN CONSULTANTS :
ANANDJIWALA INFRA ADVISORY
9, SHIVRANJANI SHOPPING CENTER, ON 132 FEET RING ROAD, NR. SHIVRANJANI CRROSS ROAD, SATELLITE, AHMEDABAD-380015
Email: anandjiwalainfra@gmail.com

PROJECT :
CONSULTANCY SERVICES FOR FEASIBILITY STUDY, PREPARATION OF DETAILED PROJECT REPORT AND PROVIDING PRE-CONSTRUCTION SERVICES FOR UPGRADATION OF EXISTING 2-LANE HIGHWAY TO 4-LANE WITH PAVED SHOULDER CONFIGURATION (NH-144A) FROM KM 26.350 (KHATI CHOWK) TO KM 30.097 (HANUMAN CHOWK) OF JAMMU-AKHNOOR SECTION IN THE UNION TERRITORY OF JAMMU & KASHMIR ON EPC BASIS

DESIGNED	BJS
DRAWN	MPT
CHECKED	GMS
APPROVED	GMS
DATE 27.08.2021	SCALE: AS SHOWN

TITLE : RECONSTRUCTION OF MINOR BRIDGE AT DESIGN CH:29+150.000 DIMENSION DETAILS OF CAST-IN-SITU PSC VOID SLAB FOR 30.0M SPAN

REV. R0
SIZE A2

DRAWING NO : NHIDCL/JA/STR/MNB/29+150/NU/401

SHEET 01 OF 02

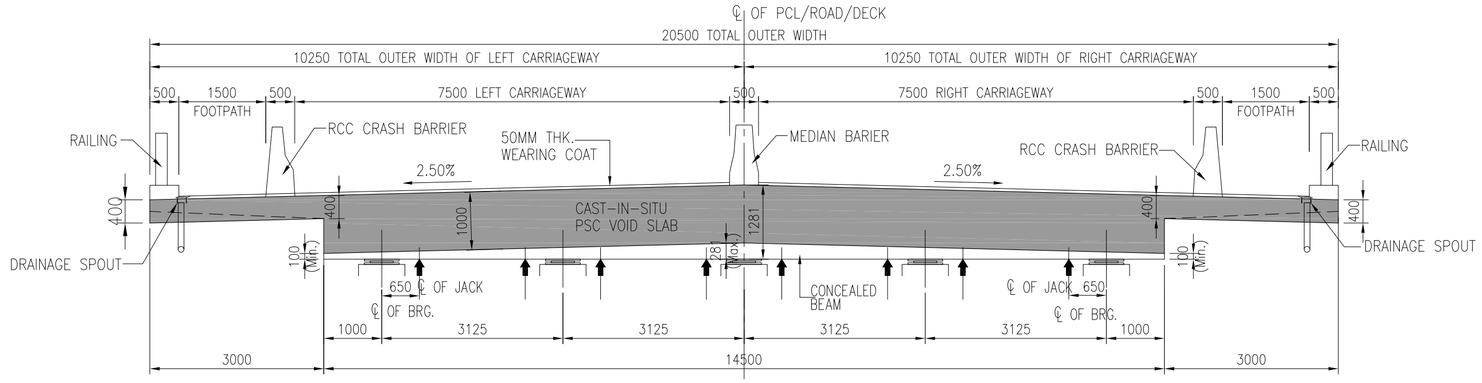

SECTION B-B

(SCALE 1:75)

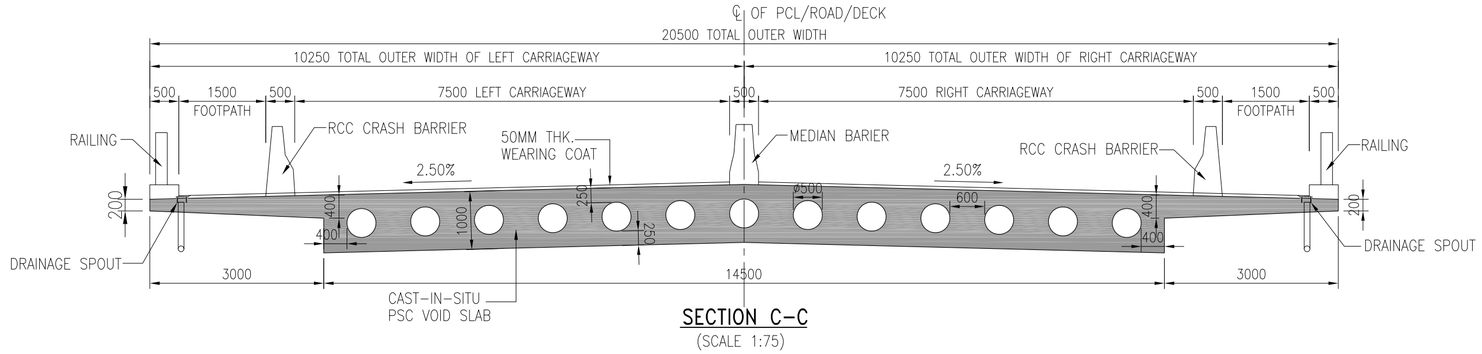

SECTION C-C

(SCALE 1:75)

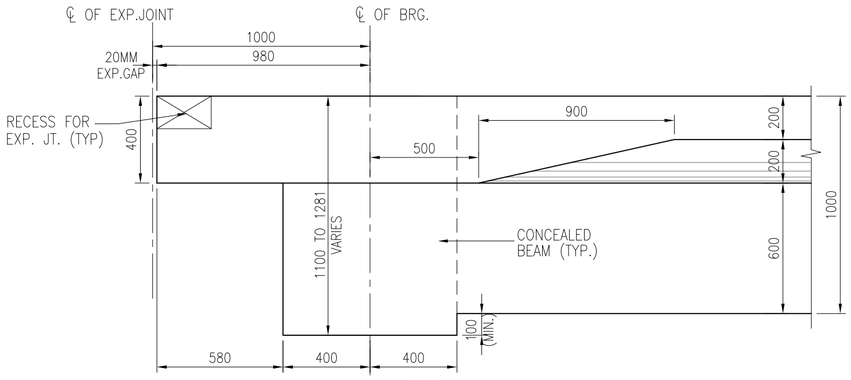

DETAIL-1

(SCALE 1:20)

(SHOWING DETAILS OF EXPANSION JOINT LOCATION)

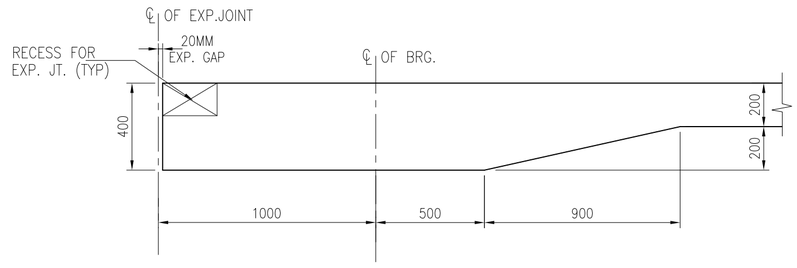

SECTION D-D

(SCALE 1:20)

NOTES:

1. FOR ALL OTHER NOTES REFER SHEET 01 OF 02.

REV	DATE	DESCRIPTION	DESIGNED	DRAWN	CHECKED	APPROVED
R0	27.08.21	ISSUED FOR APPROVAL	BJS	MPT	GMS	GMS

CLIENT:

NATIONAL HIGHWAYS & INFRASTRUCTURE DEVELOPMENT CORPORATION LTD.

PTI BUILDING, 4 PARLIAMENT STREET SANSAD MARG AREA, NEW DELHI-110001

DESIGN CONSULTANTS :

ANANDJIWALA INFRA ADVISORY

9, SHIVRANJANI SHOPPING CENTER, ON 132 FEET RING ROAD, NR. SHIVRANJANI CRROSS ROAD, SATELLITE, AHMEDABAD-380015
Email: anandjiwalainfra@gmail.com

PROJECT :

CONSULTANCY SERVICES FOR FEASIBILITY STUDY, PREPARATION OF DETAILED PROJECT REPORT AND PROVIDING PRE-CONSTRUCTION SERVICES FOR UPGRADATION OF EXISTING 2-LANE HIGHWAY TO 4-LANE WITH PAVED SHOULDER CONFIGURATION (NH-144A) FROM KM 26.350 (KHATI CHOWK) TO KM 30.097 (HANUMAN CHOWK) OF JAMMU-AKHNOOR SECTION IN THE UNION TERRITORY OF JAMMU & KASHMIR ON EPC BASIS

DESIGNED	BJS
DRAWN	MPT
CHECKED	GMS
APPROVED	GMS
DATE	27.08.2021
SCALE:	AS SHOWN

TITLE : RECONSTRUCTION OF MINOR BRIDGE AT DESIGN CH:29+150.000 DIMENSION DETAILS OF CAST-IN-SITU PSC VOID SLAB FOR 30.0M SPAN

REV. R0

SIZE A2

DRAWING NO :

NHIDCL/JA/STR/MNB/29+150/NU/401

SHEET 02 OF 02

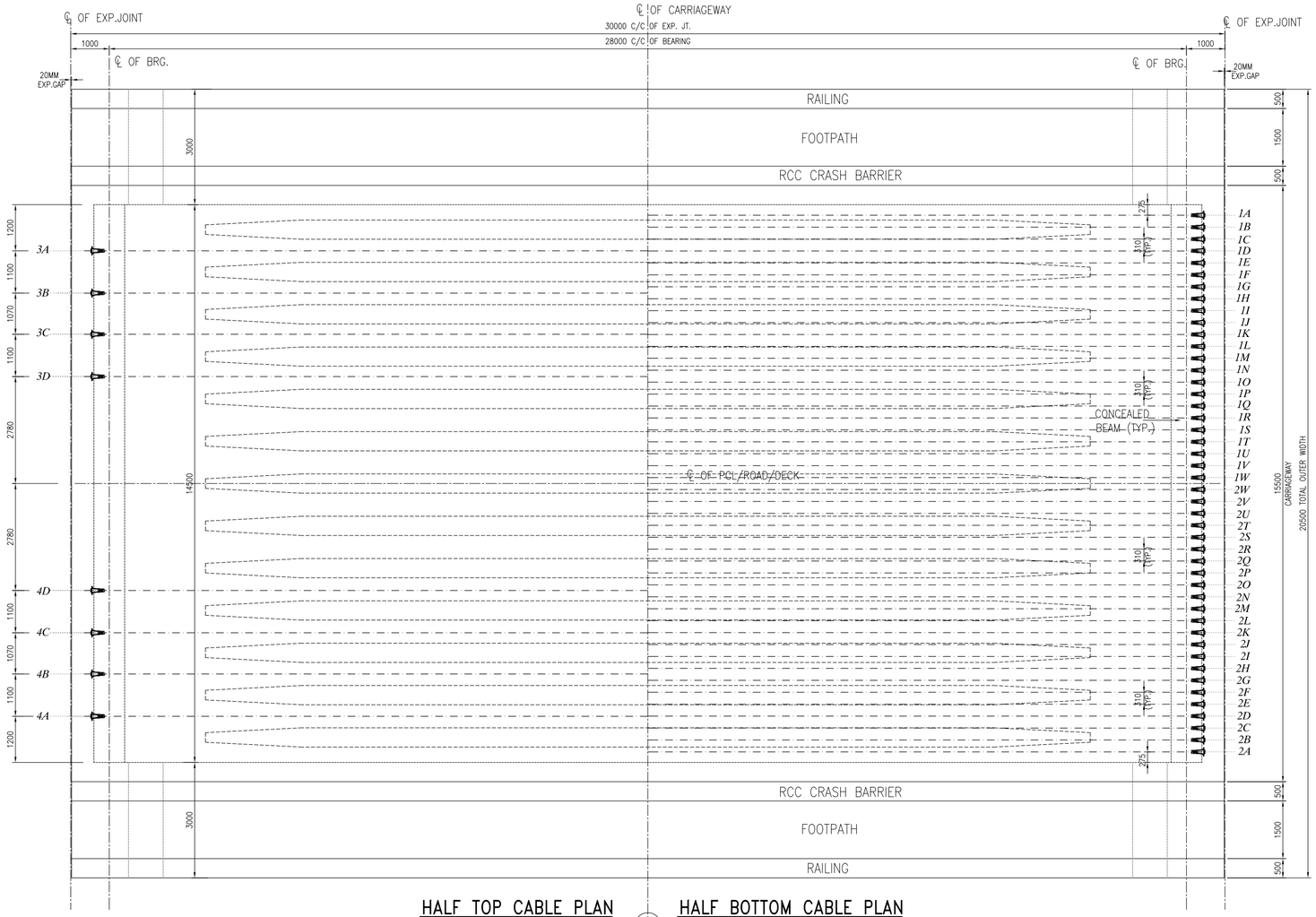

PLAN
(SCALE:- 1:200)

CABLE NO.	LENGTH (mm)	EXTENSION AT EACH END INCLUDING 6mm SLIP	EMERGENCE ANGLE ø (DEGREE)	JACK END FORCE (MT) PER CABLE	STRANDS IN VOID SLAB		
					NO.OF STRANDS	STRESSED	DUMMY
1A TO 1T	31.00	107.45	3.87	267.00	19	19	00
1U TO 1W	31.00	107.45	3.87	196.70	19	14	05
2A TO 2T	31.00	107.45	3.87	267.00	19	19	00
2U TO 2V	31.00	107.45	3.87	196.70	19	14	05
3A TO 3D	31.00	107.45	5.40	267.00	19	19	00
4A TO 4D	31.00	107.45	5.40	267.00	19	19	00

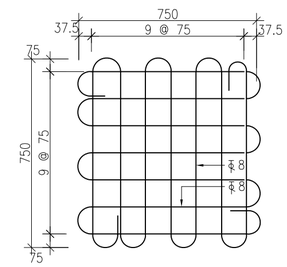

MESH TYPE-A
SCALE - 1:10

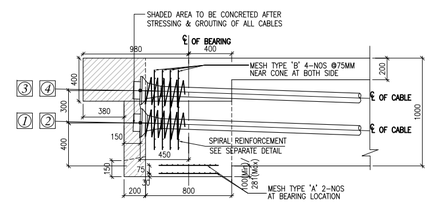

ELEVATION SHOWING END ANCHORAGE
(SHOWING REINFORCEMENT DETAILS)
SCALE - 1:25

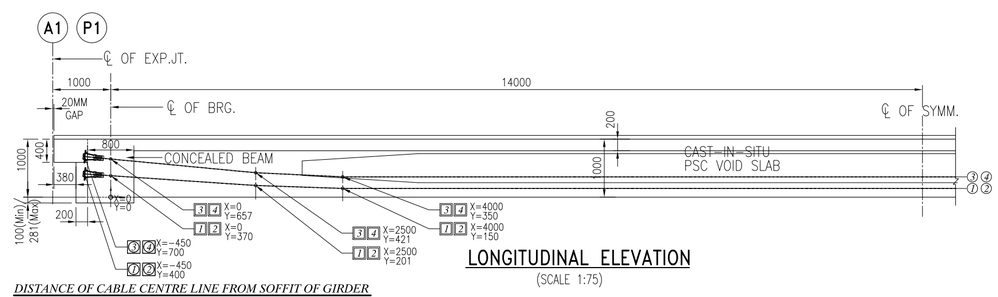

LONGITUDINAL ELEVATION
(SCALE 1:75)

DISTANCE OF CABLE CENTRE LINE FROM SOFFIT OF GIRDER

DISTANCE FROM ℄ OF ORIGIN X (mm)	-450	0.000	1000	2000	3000	4000	5000	6000	7000	8000	9000	10000	11000	12000	13000	14000
CABLE 3&4	700	657	563	468	397	350	350	350	350	350	350	350	350	350	350	350
CABLE 1&2	400	370	302	234	184	150	150	150	150	150	150	150	150	150	150	150

REV	DATE	DESCRIPTION	DESIGNED	DRAWN	CHECKED	APPROVED
R0	27.08.21	ISSUED FOR APPROVAL	BJS	MPT	GMS	GMS

CLIENT:
NATIONAL HIGHWAYS & INFRASTRUCTURE DEVELOPMENT CORPORATION LTD.
PTI BUILDING, 4 PARLIAMENT STREET
SANSAD MARG AREA, NEW DELHI-110001

DESIGN CONSULTANTS :
ANANDJIWALA INFRA ADVISORY
9, SHIVRANJANI SHOPPING CENTER, ON 132 FEET RING ROAD, NR. SHIVRANJANI CRROSS ROAD, SATELLITE, AHMEDABAD-380015
Email: anandjiwalainfra@gmail.com

PROJECT :
CONSULTANCY SERVICES FOR FEASIBILITY STUDY, PREPARATION OF DETAILED PROJECT REPORT AND PROVIDING PRE-CONSTRUCTION SERVICES FOR UPGRADATION OF EXISTING 2-LANE HIGHWAY TO 4-LANE WITH PAVED SHOULDER CONFIGURATION (NH-144A) FROM KM 26.350 (KHATI CHOWK) TO KM 30.097 (HANUMAN CHOWK) OF JAMMU-AKHNOOR SECTION IN THE UNION TERRITORY OF JAMMU & KASHMIR ON EPC BASIS

DESIGNED	BJS	
DRAWN	MPT	
CHECKED	GMS	
APPROVED	GMS	
DATE 27.08.2021	SCALE: AS SHOWN	

TITLE : RECONSTRUCTION OF MINOR BRIDGE AT DESIGN CH:29+150.000 PRESTRESS CABLE LAYOUT OF CANTILEVER PSC VOID SLAB FOR 30.0M SPAN

REV. R0
SIZE A2

DRAWING NO :
NHIDCL/JA/STR/MNB/29+150/NU/402

SHEET 01 OF 02

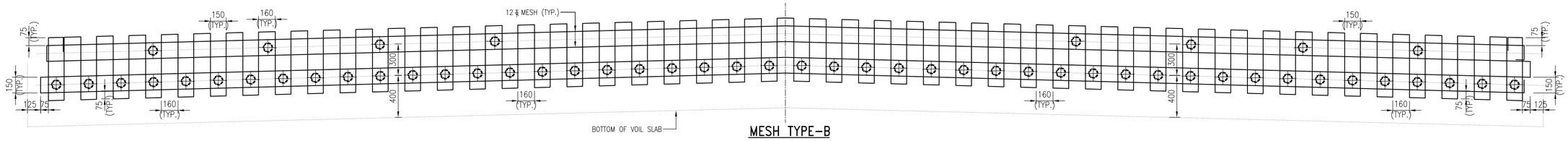

MESH TYPE-B

AS SHOWN (SCALE 1:30)

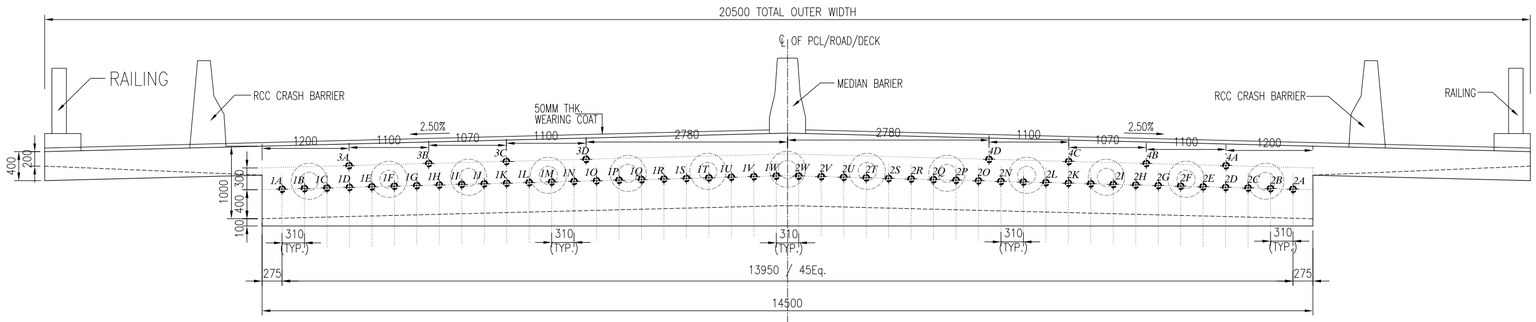

CROSS SECTION AT SUPPORT

(SCALE 1:50)

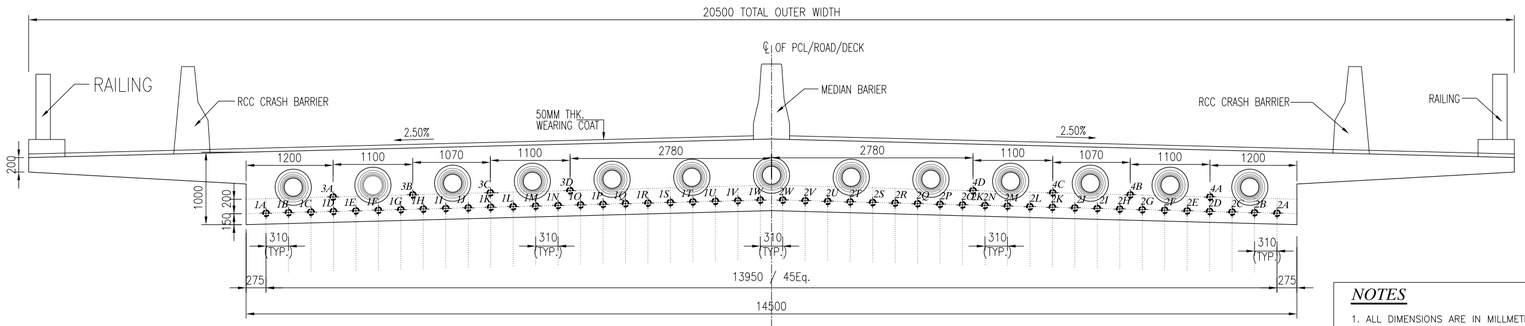

CROSS SECTION AT MID SPAN

(SCALE 1:50)

GROUP OF TABLE

GROUP-1	1W/2W, 1U/2U, 1S/2S, 1Q/2Q, 1O/2O, 1M/2M, 1K/2K, 1I/2I, 1G/2G, 1E/2E, 1C/2C, 1A/2A, 3D/4D, 3B/4B
GROUP-2	1V/2V, 1T/2T, 1R/2R, 1P/2P, 1N/2N, 1L/2L, 1J/2J, 1H/2H, 1F/2F, 1D/2D, 1B/2B, 3C/4C, 3A/4A

NOTES

1. ALL DIMENSIONS ARE IN MILLMETRES AND LEVELS ARE IN METERS UNLESS OTHERWISE MENTIONED.
2. MATERIAL :
   a) CONCRETE CONTROLLED MIX HAVING 28 DAYS CHARACTERISTIC STRENGTH OF 45N/mm². (M45).
   b) PRESTRESSING STEEL OF 12.7mm. NOMINAL DIA. SEVEN PLY CLASS-2 STRANDS AS PER IS 14268:1995 LOW RELAXATION TYPE IS USED FOR PRESTRESSING.
3. MINIMUM CLEAR COVER TO ORDINARY REINFORCEMENT – 40mm.
4. SHEATHING SHALL BE GALVANISED HDPE WITH ID OF 90MM.
5. STRAND PROPERTIES
   NOMINAL DIAMETER = 12.70 mm
   AREA = 98.7Sq.mm.
   YIELD STRENGTH = 1860 MPa (Min.)
   UTS = 183.7KN
   ELASTICITY = 195000 MPa.
   E = THOUSAND HOUR RELAXATION LOSS AT 0.7 UTS -- 2.5%
6. PARAMETERS USED FOR DESIGN
   COEFFICIENT OF FRICTION = 0.17/radians
   WOBBLE COEFFICIENT = 0.002/metre
   ANCHORAGE SLIP = 6mm
7. ELONGATION'S ARE COMPUTED BASED ON ABOVE PARAMETERS.
8. BEFORE TAKING UP STRESSING OPERATION IT IS TO BE ENSURED THAT THE JACK AND PUMP ARE PROPERLY CALIBRATED.
9. LAYING OF SHEATHING :
   i) SHEATHING SHALL BE CLOSELY SUPPORTED IN CORRECT PROFILE TO LEVELS SO THAT THEY ARE NOT DISPLACED DURING CONCRETING.
   ii) ANY REINFORCEMENT FOULING WITH SHEATHING SHALL BE ADJUSTED LOCALLY.
10. AGE OF STRESSING :
    1st STAGE STRESSING :
    CABLES OF GROUP-1 SHALL BE STRESSED ON 28TH DAY AFTER CASTING OF VOID SLAB OR WHEN CONCRETE ATTAINS 45 MPA CUBE STRENGTH WHICHEVER IS LATER.
    2nd STAGE STRESSING :
    CABLE NO. OF GROUP-2 SHALL BE STRESSED ON 28TH DAY AFTER CASTING OF VOID SLAB OR WHEN CONCRETE ATTAINS CUBE STRENGTH 45 MPA WHICHEVER IS LATER.
    IN CASE OF ANY SHORT FALL IN PRESTRESS, THE STRANDS GIVEN AS DUMMY SHALL BE USED FOR PRESTRESSING. CABLE NO. 1U/2U,1V/2V,1W/2W SHALL BE STRESSED STAGGERED WITH INCREMENT OF 25%.
11. APPROVED SYSTEM OF PRESTRESSING ADOPTED.
12. THE CABLE FOLLOW A PARABOLIC CURVE BETWEEN THE TANGENT POINTS IN ELEVATION.
13. SPRIAL REINFORCEMENT AROUND ANCHORAGE BE AS PER MANUFACTURER'S RECOMMENDATIONS.
14. ALL THE CABLES ARE STRESSED FROM BOTH ENDS.
15. THE READINGS PERTAINING TO BOTH FORCE AND ELONGATION AT EVERY STAGE SHALL BE RECORDED AT REGULAR INTERVALS.
16. JACKING FORCE PER CABLE SHALL BE EQUAL TO 76.5% OF UTS.
17. NORMALLY STRESSING CAN PROCEED ON THE INDICATED ELONGATION.
    (i) IN CASE ELONGATION IS REACHED AND CORRESPONDING JACK PRESSURE IS NOT REACHED, STRESSING SHALL BE CONTINUED UPTO 5% IN EXCESS OF PRESCRIBED ELONGATION .
    (ii) IN CASE JACK PRESSURE IS REACHED AND ELONGATION IS NOT REACHED, STRESSING CAN BE CONTINUED UPTO A MAXIMUM JACK PRESSURE OF 1.05 TIMES THE CALCULATED PRESSURE.
    (iii) IN CASE OF VARIATION MORE THAN THE PRESCRIBED LIMITS, THE MATTER SHALL BE REFEREED TO THE DESIGN OFFICE.
18. EXTENSIONS SHALL BE RECHECKED AT 24 HOURS AFTER ANCHORING TO OBSERVE SLOW SLIPPAGE. THE MATTER SHALL BE REPORTED FOR EXCESSIVE SLIPPAGE, IF ANY.
19. INITIAL SLACKNESS IN PRESTRESSING CABLES SHALL BE REMOVED BY APPLYING SMALL TENSION. THE INITIAL TENSION REQUIRED TO REMOVE SLACKNESS SHALL BE TAKEN AS THE STARTING POINT FOR MEASURING ELONGATION AND CORRECTION SHALL BE APPLIED AS PER CLAUSE 12.2.1.3 OF IS 1343-1980
20. GROUTING SHALL BE DONE 24 HOURS AFTER STRESSING THE STRANDS AND AFTER THOROUGHLY FLUSHING THE SHEATHING WITH WATER GROUTING AND IT SHALL BE DONE WITH PLAIN CEMENT GROUT WITH WATER CEMENT RATIO NOT EXCEEDING 0.4. A SUITABLE NON-ALUMINIUM BASED EXPANDING AGENT SHALL BE ADDED TO THE GROUT.
21. EXTRA LENGTH OF STRANDS AT THE END SHALL BE CUT AFTER GROUT HAS SET. THE CUTTING HAS TO BE DONE USING HACKSAW BLADES AND NOT BY GAS CUTTING.
22. CONCRETE FOR THE POCKET SHALL HAVE NON-SHRINK ADDITIVES.
23. THE ELONGATION GIVEN IN TABLE BELOW SHALL BE MODIFIED AT SITE INCASE ACTUAL VALUE OF AREA OF STRANDS 'A' AND MODULUS OF ELASTICITY 'E' VARIES FROM THOSE ASSUMED IN DESIGN. REVISED EXTENSIONS SHALL BE CALCULATED AS UNDER
    REVISED ELONGATION = (98.7 x 195000 /AREA x NEW MODULUS) x EXTENSION
24. THE GRIP LENGTH FROM ANCHORAGE FACE UPTO GRIPPING POINT IN JACK ASSUMED IN EXTENSION CALCULATION IS 600mm AND THE ADDITIONAL LENGTH TAKEN FOR CUTTING IS 400mm. IN CASE GRIP LENGTH VARIES THEN THOSE CONSIDERED, THE EXTENSIONS SHALL BE MODIFIED AS UNDER: NEW EXTENSION= EX + EX x (GRIP-600) / ((LENGTH OF CABLE) /2) WHERE EXTENSIONS ARE GIVEN FOR HALF CABLE LENGTHS INCLUSIVE OF 600mm GRIP LENGTH AT EACH END LENGTH AT EACH END.

REV	DATE	DESCRIPTION	DESIGNED	DRAWN	CHECKED	APPROVED
R0	27.08.21	ISSUED FOR APPROVAL	BJS	MPT	GMS	GMS

CLIENT:
NATIONAL HIGHWAYS & INFRASTRUCTURE DEVELOPMENT CORPORATION LTD.
PTI BUILDING, 4 PARLIAMENT STREET
SANSAD MARG AREA, NEW DELHI-110001

DESIGN CONSULTANTS :
ANANDJIWALA INFRA ADVISORY
9, SHIVRANJANI SHOPPING CENTER, ON 132 FEET RING ROAD, NR. SHIVRANJANI CRROSS ROAD, SATELLITE, AHMEDABAD-380015
Email: anandjiwalainfra@gmail.com

PROJECT :
CONSULTANCY SERVICES FOR FEASIBILITY STUDY, PREPARATION OF DETAILED PROJECT REPORT AND PROVIDING PRE-CONSTRUCTION SERVICES FOR UPGRADATION OF EXISTING 2-LANE HIGHWAY TO 4-LANE WITH PAVED SHOULDER CONFIGURATION (NH-144A) FROM KM 26.350 (KHATI CHOWK) TO KM 30.097 (HANUMAN CHOWK) OF JAMMU-AKHNOOR SECTION IN THE UNION TERRITORY OF JAMMU & KASHMIR ON EPC BASIS

DESIGNED	BJS	
DRAWN	MPT	
CHECKED	GMS	
APPROVED	GMS	
DATE 27.08.2021	SCALE: AS SHOWN	

TITLE : RECONSTRUCTION OF MINOR BRIDGE AT DESIGN CH:29+150.000 PRESTRESS CABLE LAYOUT OF CANTILEVER PSC VOID SLAB FOR 30.0M SPAN

REV. R0
SIZE A2

DRAWING NO :
NHIDCL/JA/STR/MNB/29+150/NU/402

SHEET 02 OF 02

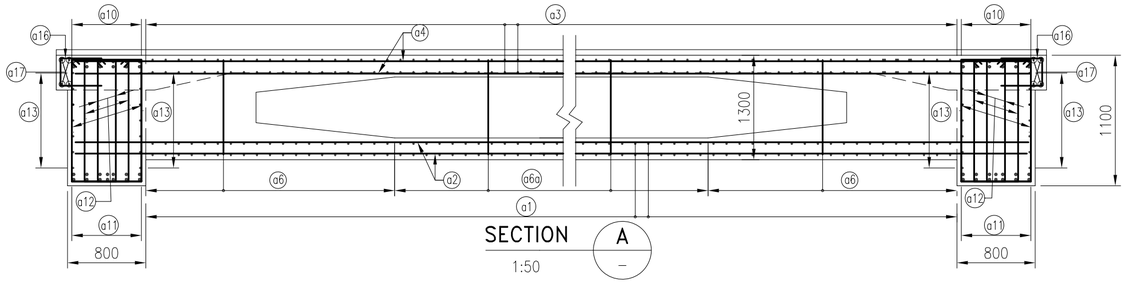

SECTION A
1:50

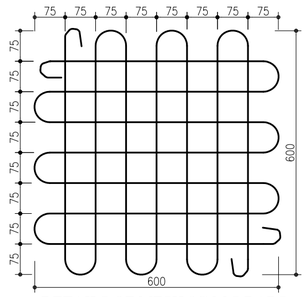

DETAILS OF MESH 8Ø M.S BARS
TYPE (AT BEARING LOCATION)

SCHEDULE OF REINFORCEMENT

S.NO	BAR MKD.	SHAPE	DIA (mm)	SPACING /NOS
1.	a1	795 795	12	150 C/C
2.	a2		12	150 C/C
3.	a3	625 625	12	150 C/C
4.	a4		12	150 C/C
5.	a5	300 300	16	200 C/C
6.	a6		16	2-LEGGED STIRRUPS 7-NOS @150 C/C
6.	a6a		16	2-LEGGED STIRRUPS 7-NOS @200 C/C
7.	a7		16	150 C/C
8.	a8	300	12	150 C/C
9.	a9		12	150 C/C
10.	a10		20 + 20	6 NOS. + 6 NOS.
11.	a11		25 + 25	7 NOS. + 7 NOS.
12.	a12		16	2L-150 C/C(OUTER) + 4L-150 C/C(INNER)
13.	a13	300 300	16	12 NOS.
14.	a14		16	150 C/C
15.	a15		12	150 C/C
16.	a16	500	12	150 C/C
17.	a17		12	150 C/C

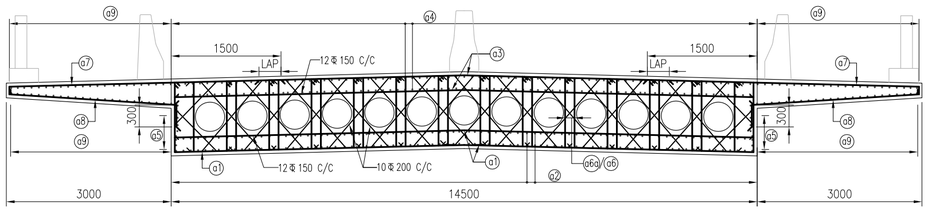

SECTION B
1:50
(REINFORCEMENT OF CONCEALED BEAM NOT SHOWN FOR CLARITY)

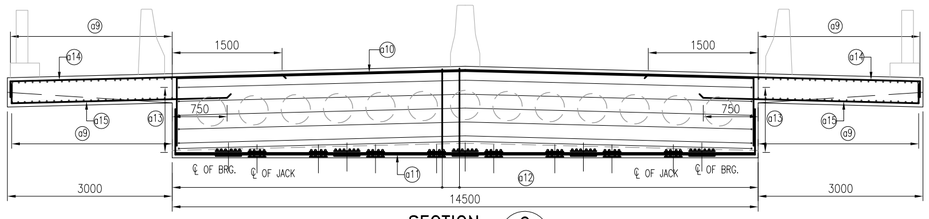

SECTION C
1:50
(REINFORCEMENT OF VOID SLAB NOT SHOWN FOR CLARITY)

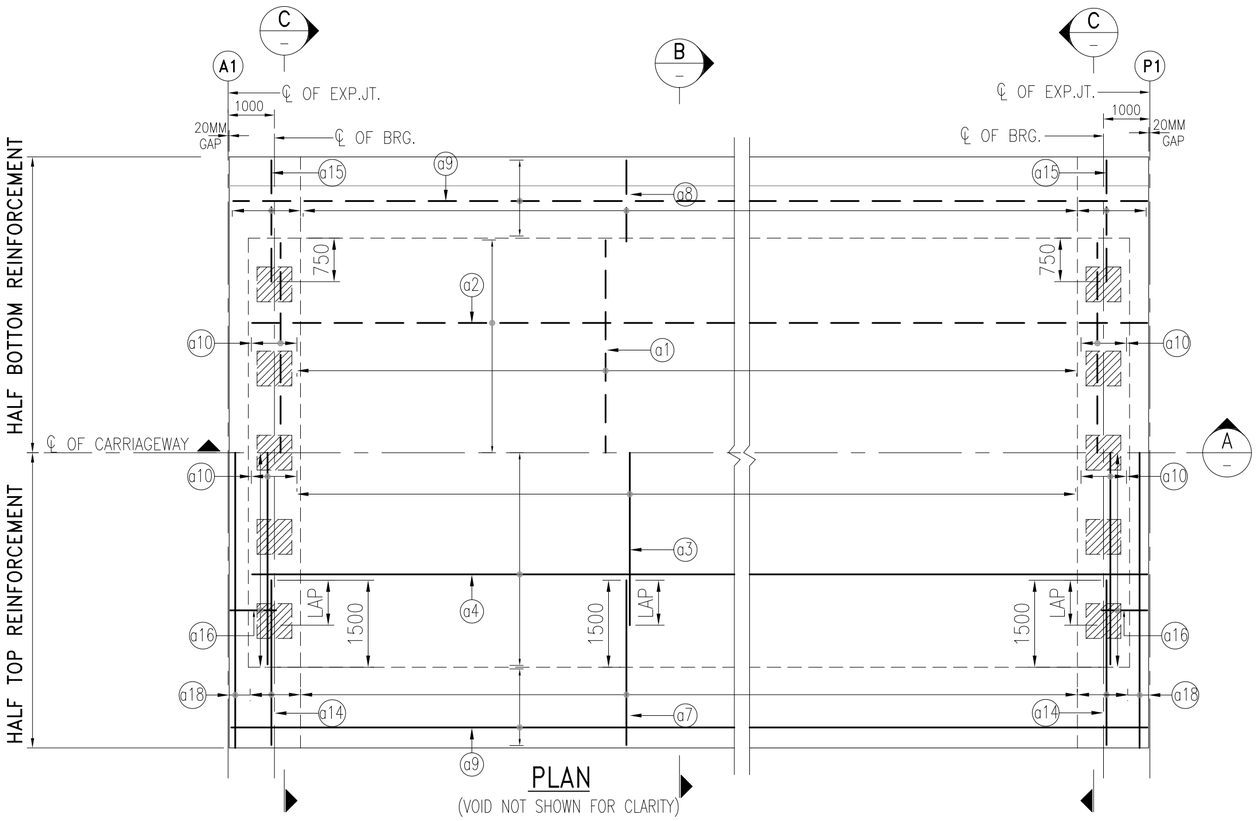

PLAN
(VOID NOT SHOWN FOR CLARITY)

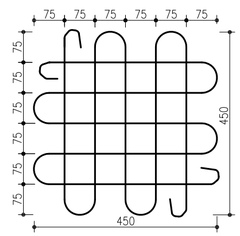

DETAILS OF MESH 8Ø M.S BARS
TYPE (AT JACK LOCATION)

NOTES:

1. ALL DIMENSIONS ARE IN mm. UNLESS OTHERWISE MENTIONED. ONLY WRITTEN DIMENSIONS ARE TO BE FOLLOWED.NO DIMENSION IS TO BE SCALED.
2. CONCRETE SHALL BE DESIGN MIX WITH A MINIMUM 28 DAYS CHARACTRISTIC CUBE STRENGTH OF 45MPa.
3. ALL REINFORCEMENT SHALL BE GRADE TMT BARS OF DESIGNATION Fe500 CONFORMING TO IS:1786 STANDARD WITH A MINIMUM YIELD STRENGTH OF 500 N/sq.mm.
4. THE CLEAR COVER FOR VOID SLAB SHALL BE 40MM.
5. NOT MORE THAN 80% BARS SHALL BE LAPPED AT ANY LOCATION.LAP LENGTH OF BAR SHALL BE 56 TIMES THE DIA OF BAR.

REFERENCE DRAWINGS:

1. GENERAL ARRANGEMENT DRAWING -NHIDCL/JA/STR/MNB/29+150/GA/101
1. DIMENSIONS DETAILS OF VOID SLAB -NHIDCL/JA/STR/MNB/29+150/NU/401

LEGEND:

1. TOP LAYER BARS SHOWN IN FIRM LINE
2. BOTTOM LAYER BARS SHOWN IN DOTTED LINE

REV	DATE	DESCRIPTION	DESIGNED	DRAWN	CHECKED	APPROVED
R0	27.08.21	ISSUED FOR APPROVAL	BJS	MPT	GMS	GMS

CLIENT:
NATIONAL HIGHWAYS & INFRASTRUCTURE DEVELOPMENT CORPORATION LTD.
PTI BUILDING, 4 PARLIAMENT STREET SANSAD MARG AREA, NEW DELHI-110001

DESIGN CONSULTANTS :
ANANDJIWALA INFRA ADVISORY
9, SHIVRANJANI SHOPPING CENTER, ON 132 FEET RING ROAD, NR. SHIVRANJANI CRROSS ROAD, SATELLITE, AHMEDABAD-380015
Email: anandjiwalainfra@gmail.com

PROJECT :
CONSULTANCY SERVICES FOR FEASIBILITY STUDY, PREPARATION OF DETAILED PROJECT REPORT AND PROVIDING PRE-CONSTRUCTION SERVICES FOR UPGRADATION OF EXISTING 2-LANE HIGHWAY TO 4-LANE WITH PAVED SHOULDER CONFIGURATION (NH-144A) FROM KM 26.350 (KHATI CHOWK) TO KM 30.097 (HANUMAN CHOWK) OF JAMMU-AKHNOOR SECTION IN THE UNION TERRITORY OF JAMMU & KASHMIR ON EPC BASIS

DESIGNED	BJS
DRAWN	MPT
CHECKED	GMS
APPROVED	GMS
DATE 27.08.2021	SCALE: AS SHOWN

TITLE : RECONSTRUCTION OF MINOR BRIDGE AT DESIGN CH:29+150.000 REINFORCEMENT DETAILS OF CANTILEVER PSC VOID SLAB FOR 30.0M SPAN

REV. R0
SIZE A2

DRAWING NO :
NHIDCL/JA/STR/MNB/29+150/NU/403

SHEET 01 OF 01

1	BEARING FORCE DETAILS FOR MNB AT CH.29+150								
2	Bearing Identification mark								
	Type of Bearing					TGB (GUIDED SLIDING SPHERICAL BEARING)	FREE (FREE SLIDING SPHERICAL BEARING)	FIXED SPHERICAL BEARING	LGB (GUIDED SLIDING SPHERICAL BEARING)
3	Number off								
4	Seating Material and characteristic	Upper Surface				M50	M50	M50	M50
		Lower Surface				M40	M40	M40	M40
5	Design Load (Tonne)	Serviceability Limit state (SLS)	Vertical	Max	Normal	222.6	222.6	222.6	222.6
					Seismic	-	-	-	-
				Min	Normal	81.5	81.5	81.5	81.5
					Seismic	-	-	-	-
			Permanent	Max		128.7	128.7	128.7	128.7
				Min		116.5	116.5	116.5	116.5
			Transverse		Normal	-	-	0	0
					Seismic	-	-	-	-
			Longitudinal		Normal	14	11.5	14	11.5
					Seismic	-	-	-	-
		Ultimate Limit state (ULS)	Vertical	Max	Normal	319.5	319.5	319.5	319.5
					Seismic	237.50	237.50	237.50	237.50
				Min	Normal	34.1	34.1	34.1	34.1
					Seismic	123.5	123.5	123.5	123.5
			Permanent	Max		178.5	178.5	178.5	178.5
				Min		161.5	161.5	161.5	161.5
			Transverse		Normal	-	-	0	0
					Seismic	10	10	482.5	482.5
			Longitudinal		Normal	21.5	16	21.5	16
					Seismic	185	10	185	10
6	Displacement (mm)	Serviceability Limit state (SLS)	Irreversible	Transverse		-1	-1	-	-
				Longitudinal		-	-18	-	-18
			Reversible	Transverse		± 3	± 3	-	-
				Longitudinal		-	± 16	-	± 16
		Ultimate Limit state (ULS)	Irreversible	Transverse		-1	-1	-	-
				Longitudinal		-	-18	-	-18
			Reversible	Transverse		± 4	± 4	-	-
				Longitudinal		-	± 23	-	± 23
7	Rotation (Radians)	Serviceability Limit state (SLS)	Irreversible	Transverse		±0.01	±0.01	±0.01	±0.01
				Longitudinal		±0.01	±0.01	±0.01	±0.01
			Reversible	Transverse		±0.01	±0.01	±0.01	±0.01
				Longitudinal		±0.01	±0.01	±0.01	±0.01
		Ultimate Limit state (ULS)	Irreversible	Transverse		±0.01	±0.01	±0.01	±0.01
				Longitudinal		±0.01	±0.01	±0.01	±0.01
			Reversible	Transverse		±0.01	±0.01	±0.01	±0.01
				Longitudinal		±0.01	±0.01	±0.01	±0.01

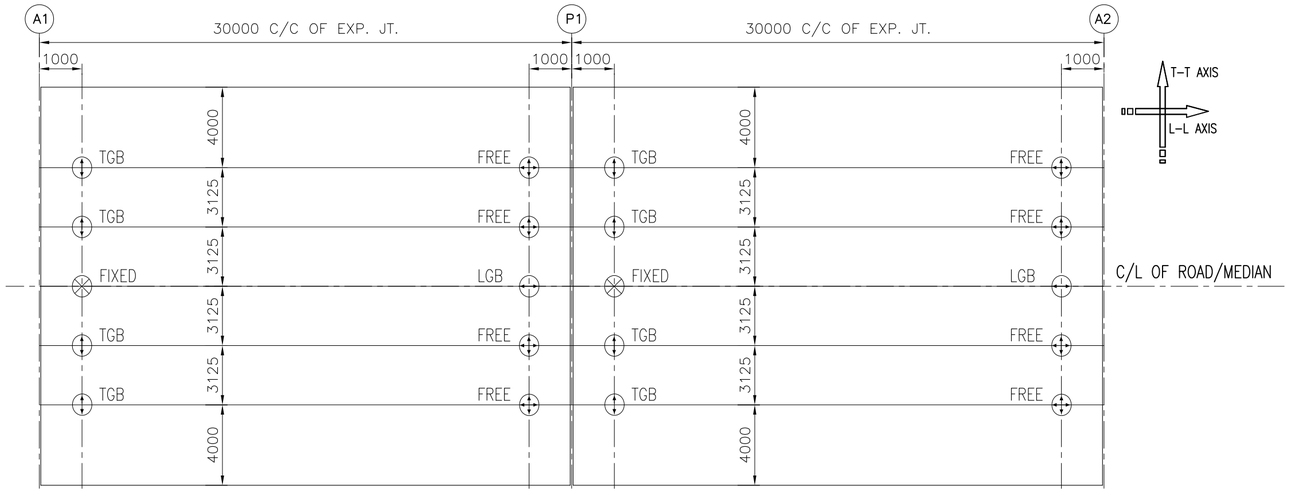

BEARING ARRANGEMENT PLAN

(BEARING LAYOUT IS SHOWN FOR LHS CARRIAGEWAY & RHS CARRIAGEWAY

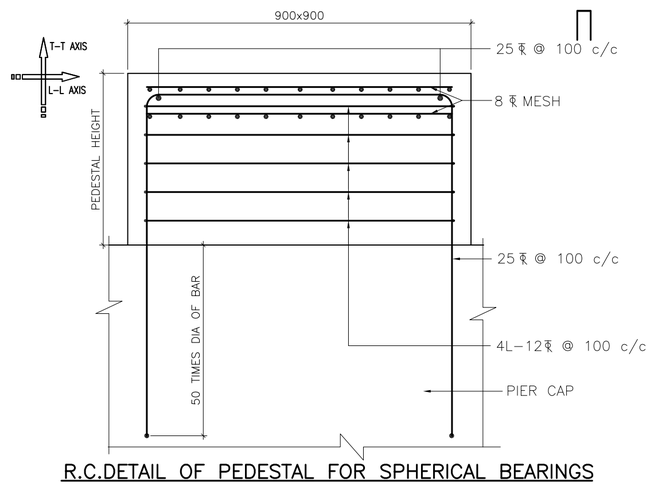

R.C.DETAIL OF PEDESTAL FOR SPHERICAL BEARINGS

(SCALE 1:10)

DIMENSIONS MARKED THUS (*) ARE TENTATIVE AND TO BE ADJUSTED AT SITE

GRADE OF CONCRETE FOR PEDESTAL SHALL BE M40

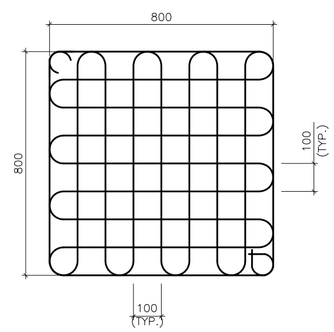

DETAIL OF 8 ϕ MESH REINFORCEMENT FOR PEDESTAL

LEGEND:–

1. L–L Denotes longitudinal axis of bridge.
2. T–T Denotes transverse axis of bridge.

REF. DRAWING:–

a) GENERAL ARRANGEMENT DRAWING —— NHIDCL/JA/STR/MNB/29+150/GA/101

b) DIMENSION & REINFORCEMENT DETAILS OF SUPERSTRUCTURE DRAWINGS —— NHIDCL/JA/STR/MNB/29+150/NU/401

REV	DATE	DESCRIPTION	DESIGNED	DRAWN	CHECKED	APPROVED
R0	27.08.21	ISSUED FOR APPROVAL	BJS	MPT	GMS	GMS

CLIENT:
NATIONAL HIGHWAYS & INFRASTRUCTURE DEVELOPMENT CORPORATION LTD.
PTI BUILDING, 4 PARLIAMENT STREET SANSAD MARG AREA, NEW DELHI-110001

DESIGN CONSULTANTS :
ANANDJIWALA INFRA ADVISORY
9, SHIVRANJANI SHOPPING CENTER, ON 132 FEET RING ROAD, NR. SHIVRANJANI CRROSS ROAD, SATELLITE, AHMEDABAD-380015
Email: anandjiwalainfra@gmail.com

PROJECT :
CONSULTANCY SERVICES FOR FEASIBILITY STUDY, PREPARATION OF DETAILED PROJECT REPORT AND PROVIDING PRE-CONSTRUCTION SERVICES FOR UPGRADATION OF EXISTING 2-LANE HIGHWAY TO 4-LANE WITH PAVED SHOULDER CONFIGURATION (NH-144A) FROM KM 26.350 (KHATI CHOWK) TO KM 30.097 (HANUMAN CHOWK) OF JAMMU-AKHNOOR SECTION IN THE UNION TERRITORY OF JAMMU & KASHMIR ON EPC BASIS

DESIGNED	BJS
DRAWN	MPT
CHECKED	GMS
APPROVED	GMS
DATE	27.08.2021
SCALE:	AS SHOWN

TITLE : RECONSTRUCTION OF MINOR BRIDGE AT DESIGN CH:29+150.000 BEARING ARRANGEMENT PLAN FOR 30.0M SPAN

REV. R0

SIZE A2

DRAWING NO : NHIDCL/JA/STR/MNB/29+150/NU/501

SHEET 01 OF 01

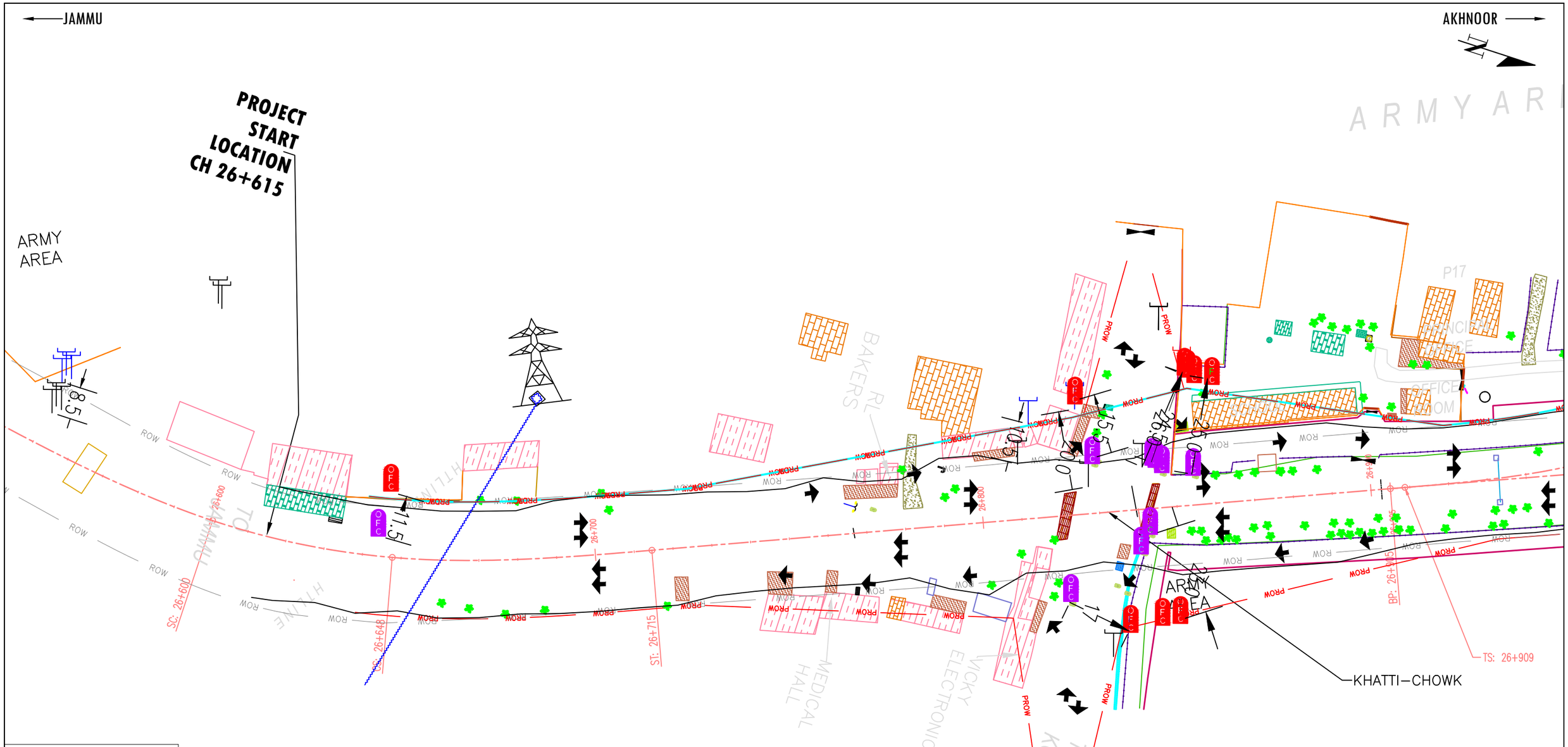

	PROPOSED CL
	FINAL TOE LINE
	PROPOSED ROW
	EXISTING ROAD
	EXISTING CL
	EXISTING ROW
	EXISTING TELEPHONE POLE
	PROPOSED TELEPHONEPOLE
	EXISTING OFC
	PROPOSED OFC
	EXISTING ELECTRIC POLE
	PROPOSED ELECTRIC POLE

REV.	DATE	REVISIONS
02	09/09/2020	AL UPDATE MBR
01	11/06/2020	AL UPDATE END

CLIENT:
NATIONAL HIGHWAYS & INFRASTRUCTURE DEVELOPMENT CORPORATION LTD.
PTI BUILDING, 4 PARLIAMENT STREET
SANSAD MARG AREA, NEW DELHI - 110001

DESIGN CONSULTANT:
ANANDJIWALA INFRA ADVISORY
9, Shivranjani Shopping Center, On 132 Feet Ring Road
Nr. Shivranjani Cross Road, Satellite, Ahmedabad - 380 015
Email: anandjiwalainfra@gmail.com

PROJECT:
CONSULTANCY SERVICES FOR FEASIBILITY STUDY, PREPARATION OF DETAILED PROJECT REPORT AND PROVIDING PRE-CONSTRUCTION SERVICES FOR UPGRADATION OF EXISTING 2 LANE HIGHWAY TO 4 LANE WITH PAVED SHOULDER CONFIGURATION (NH-144A) FROM KM 26.350 (KHATI CHOWK) TO KM 30.097 (HANUMAN CHOWK) OF JAMMU - AKHNOOR SECTION IN THE UNION TERRITORY OF JAMMU & KASHMIR ON EPC BASIS

SCALE AT A3 SIZE DRAWING
HORIZ.1:1000
8 0 8 16 24 32 40

TITLE:
UTILITY PLAN
Km 26+600 to Km- 26+900

CLIENT APPROVAL: | SIGNATURE:

DWG NO:– ICS/JA/NHIDCL/FS/P&P/1

DRAWN:	CHECKED:	DESIGNED:	APPROVED:
LK	SJ	SC	LA

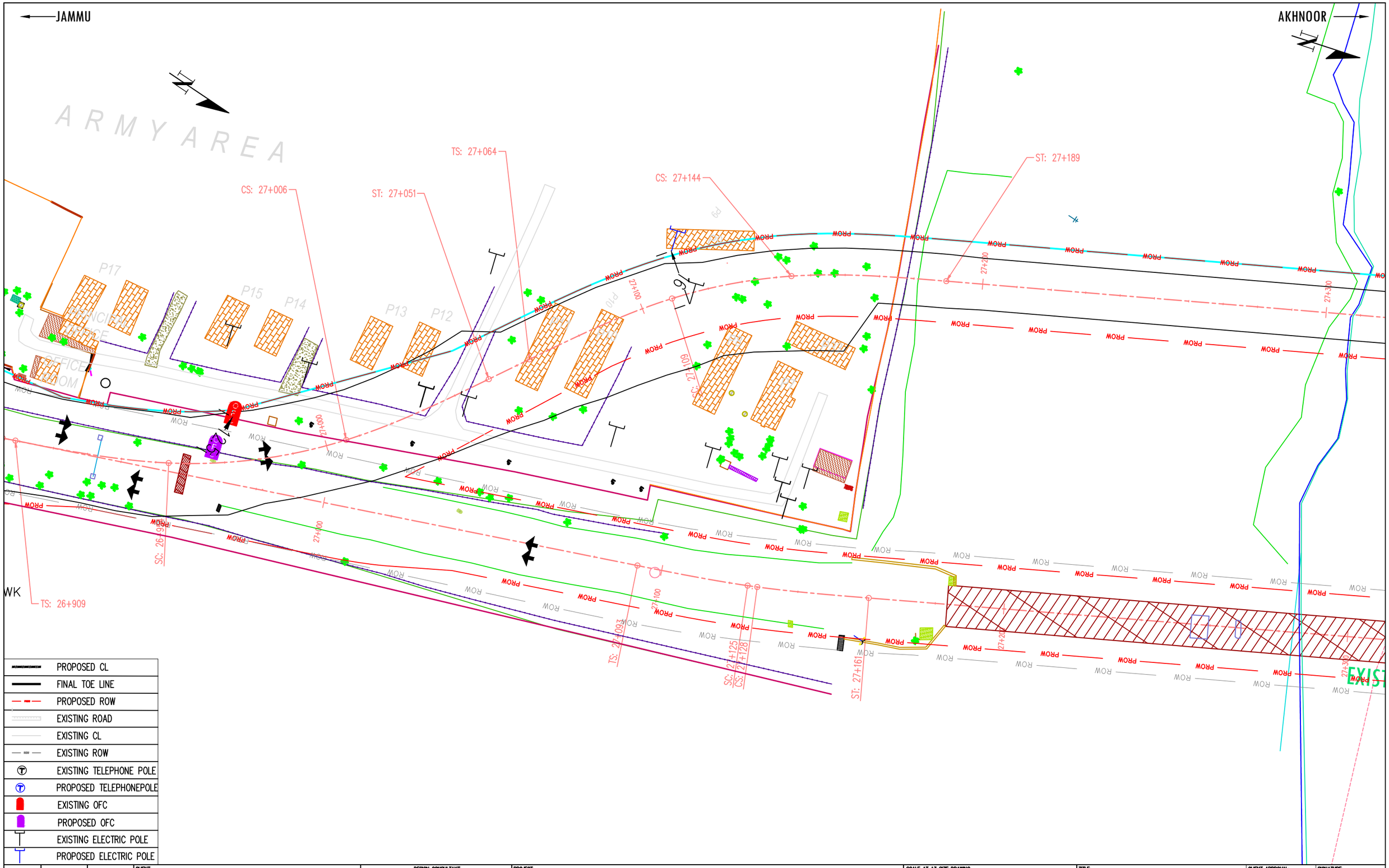

	PROPOSED CL
	FINAL TOE LINE
	PROPOSED ROW
	EXISTING ROAD
	EXISTING CL
	EXISTING ROW
	EXISTING TELEPHONE POLE
	PROPOSED TELEPHONEPOLE
	EXISTING OFC
	PROPOSED OFC
	EXISTING ELECTRIC POLE
	PROPOSED ELECTRIC POLE

REV.	DATE	REVISIONS
02	09/09/2020	AL UPDATE MBR
01	11/06/2020	AL UPDATE END

CLIENT:

NATIONAL HIGHWAYS & INFRASTRUCTURE DEVELOPMENT CORPORATION LTD.
PTI BUILDING, 4 PARLIAMENT STREET
SANSAD MARG AREA, NEW DELHI - 110001

DESIGN CONSULTANT:

ANANDJIWALA INFRA ADVISORY
9, Shivranjani Shopping Center, On 132 Feet Ring Road
Nr. Shivranjani Cross Road, Satellite, Ahmedabad - 380 015
Email: anandjiwalainfra@gmail.com

PROJECT:

CONSULTANCY SERVICES FOR FEASIBILITY STUDY, PREPARATION OF DETAILED PROJECT REPORT AND PROVIDING PRE-CONSTRUCTION SERVICES FOR UPGRADATION OF EXISTING 2 LANE HIGHWAY TO 4 LANE WITH PAVED SHOULDER CONFIGURATION (NH-144A) FROM KM 26.350 (KHATI CHOWK) TO KM 30.097 (HANUMAN CHOWK) OF JAMMU - AKHNOOR SECTION IN THE UNION TERRITORY OF JAMMU & KASHMIR ON EPC BASIS

SCALE AT A3 SIZE DRAWING
HORIZ.1:1000
8 0 8 16 24 32 40

TITLE:

UTILITY PLAN

Km 26+900 to Km- 27+300

CLIENT APPROVAL: | SIGNATURE:

DWG NO:- ICS/JA/NHIDCL/FS/P&P/1

DRAWN:	CHECKED:	DESIGNED:	APPROVED:
LK	SJ	SC	LA

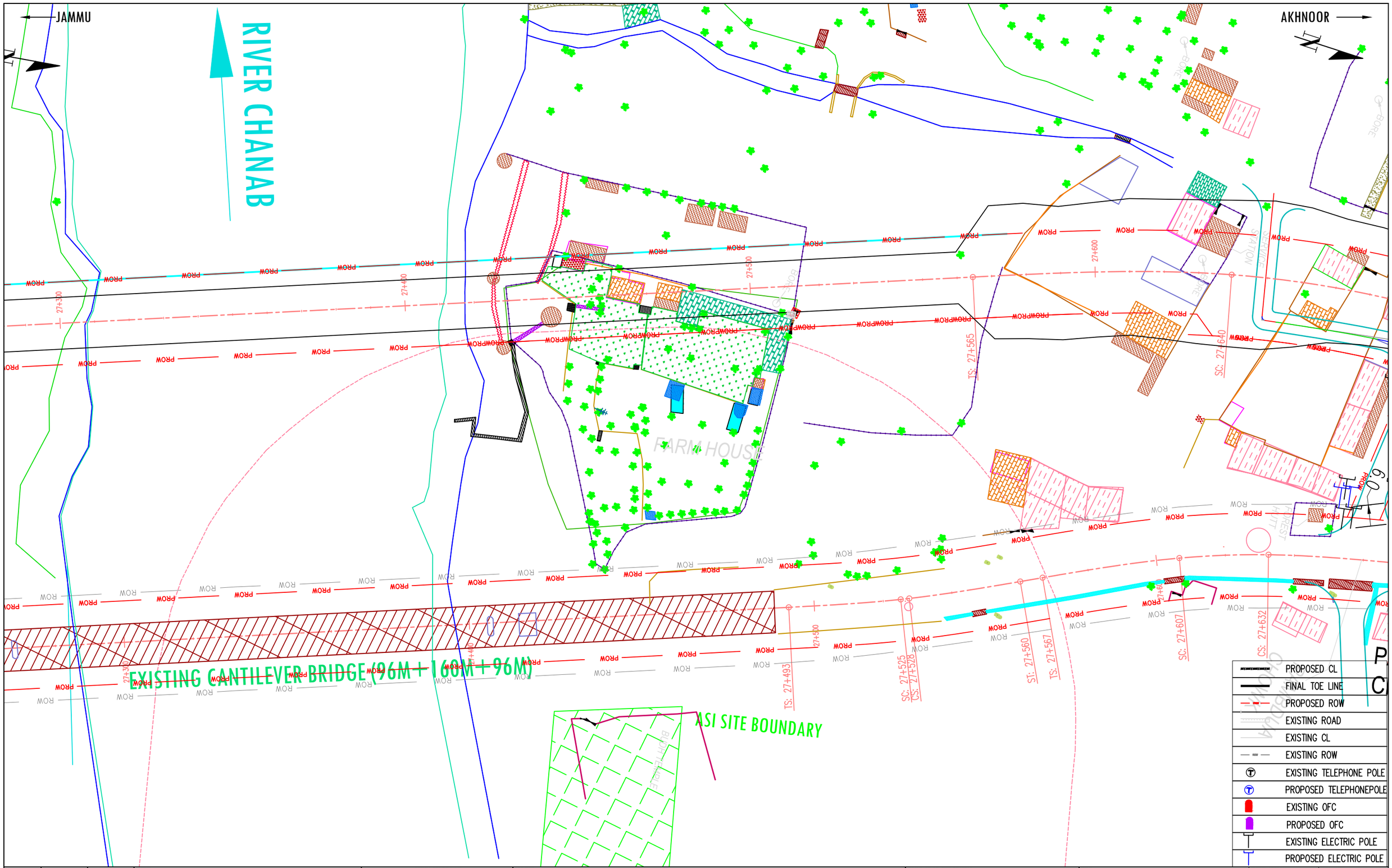

REV.	DATE	REVISIONS
02	09/09/2020	AL UPDATE MBR
01	11/06/2020	AL UPDATE END

CLIENT:
NATIONAL HIGHWAYS & INFRASTRUCTURE DEVELOPMENT CORPORATION LTD.
PTI BUILDING, 4 PARLIAMENT STREET
SANSAD MARG AREA, NEW DELHI - 110001

DESIGN CONSULTANT:
ANANDJIWALA INFRA ADVISORY
9, Shivranjani Shopping Center, On 132 Feet Ring Road
Nr. Shivranjani Cross Road, Satellite, Ahmedabad - 380 015
Email: anandjiwalainfra@gmail.com

PROJECT:
CONSULTANCY SERVICES FOR FEASIBILITY STUDY, PREPARATION OF DETAILED PROJECT REPORT AND PROVIDING PRE-CONSTRUCTION SERVICES FOR UPGRADATION OF EXISTING 2 LANE HIGHWAY TO 4 LANE WITH PAVED SHOULDER CONFIGURATION (NH-144A) FROM KM 26.350 (KHATI CHOWK) TO KM 30.097 (HANUMAN CHOWK) OF JAMMU - AKHNOOR SECTION IN THE UNION TERRITORY OF JAMMU & KASHMIR ON EPC BASIS

SCALE AT A3 SIZE DRAWING
HORIZ.1:1000
8 0 8 16 24 32 40

TITLE:
UTILITY PLAN
Km 27+300 to Km- 27+600

CLIENT APPROVAL: | SIGNATURE:

DWG NO:- ICS/JA/NHIDCL/FS/P&P/1

DRAWN:	CHECKED:	DESIGNED:	APPROVED:
LK	SJ	SC	LA

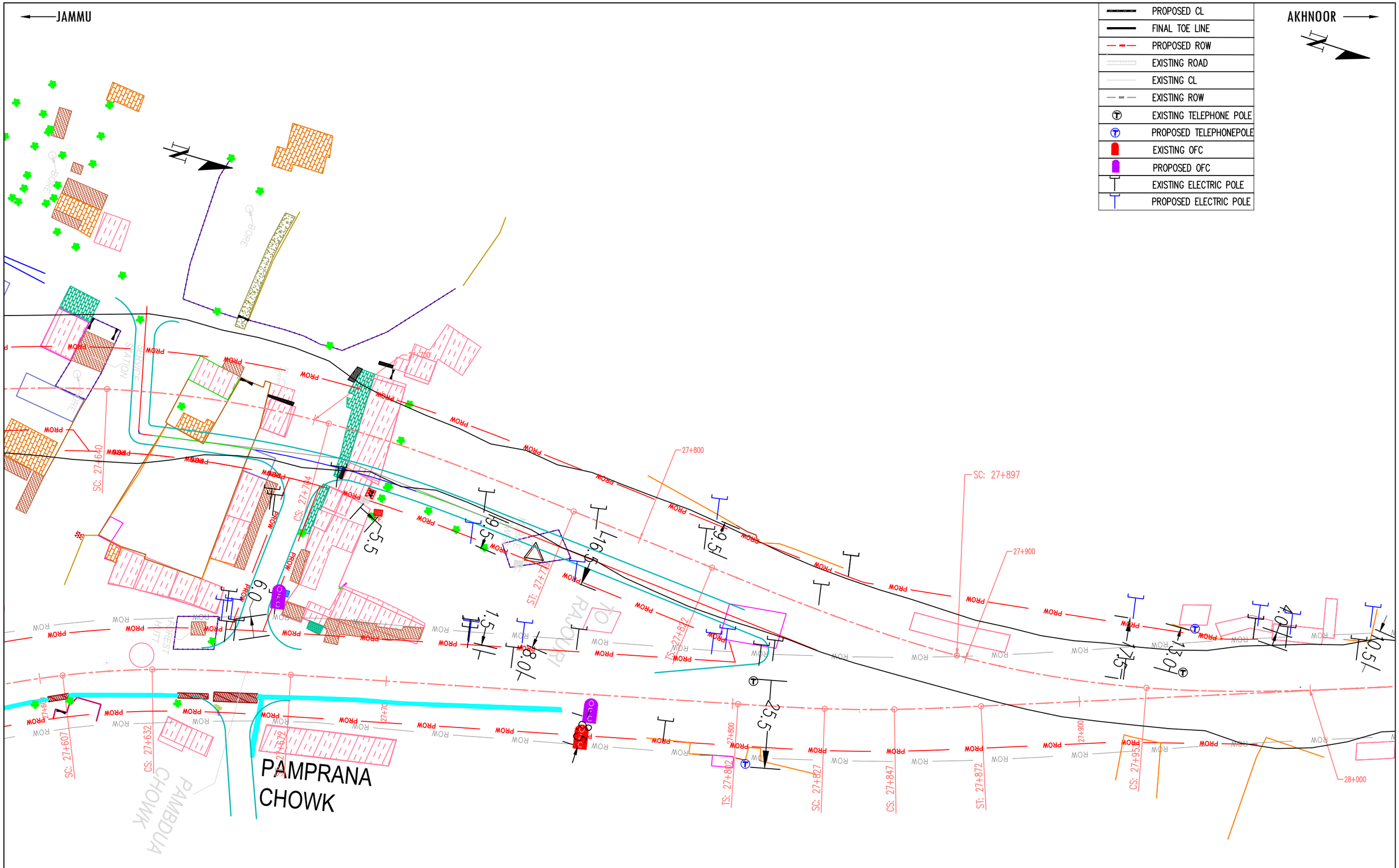

REV.	DATE	REVISIONS
02	09/09/2020	AL UPDATE MBR
01	11/06/2020	AL UPDATE END

CLIENT:

NATIONAL HIGHWAYS & INFRASTRUCTURE DEVELOPMENT CORPORATION LTD.
PTI BUILDING, 4 PARLIAMENT STREET
SANSAD MARG AREA, NEW DELHI - 110001

DESIGN CONSULTANT:

ANANDJIWALA INFRA ADVISORY
9, Shivranjani Shopping Center, On 132 Feet Ring Road
Nr. Shivranjani Cross Road, Satellite, Ahmedabad - 380 015
Email: anandjiwalainfra@gmail.com

PROJECT:

CONSULTANCY SERVICES FOR FEASIBILITY STUDY, PREPARATION OF DETAILED PROJECT REPORT AND PROVIDING PRE-CONSTRUCTION SERVICES FOR UPGRADATION OF EXISTING 2 LANE HIGHWAY TO 4 LANE WITH PAVED SHOULDER CONFIGURATION (NH-144A) FROM KM 26.350 (KHATI CHOWK) TO KM 30.097 (HANUMAN CHOWK) OF JAMMU - AKHNOOR SECTION IN THE UNION TERRITORY OF JAMMU & KASHMIR ON EPC BASIS

SCALE AT A3 SIZE DRAWING
HORIZ.1:1000
8 0 8 16 24 32 40

TITLE:

UTILITY PLAN

Km 27+600 to Km- 28+000

CLIENT APPROVAL: | SIGNATURE:

DWG NO:- ICS/JA/NHIDCL/FS/P&P/1

DRAWN:	CHECKED:	DESIGNED:	APPROVED:
LK	SJ	SC	LA

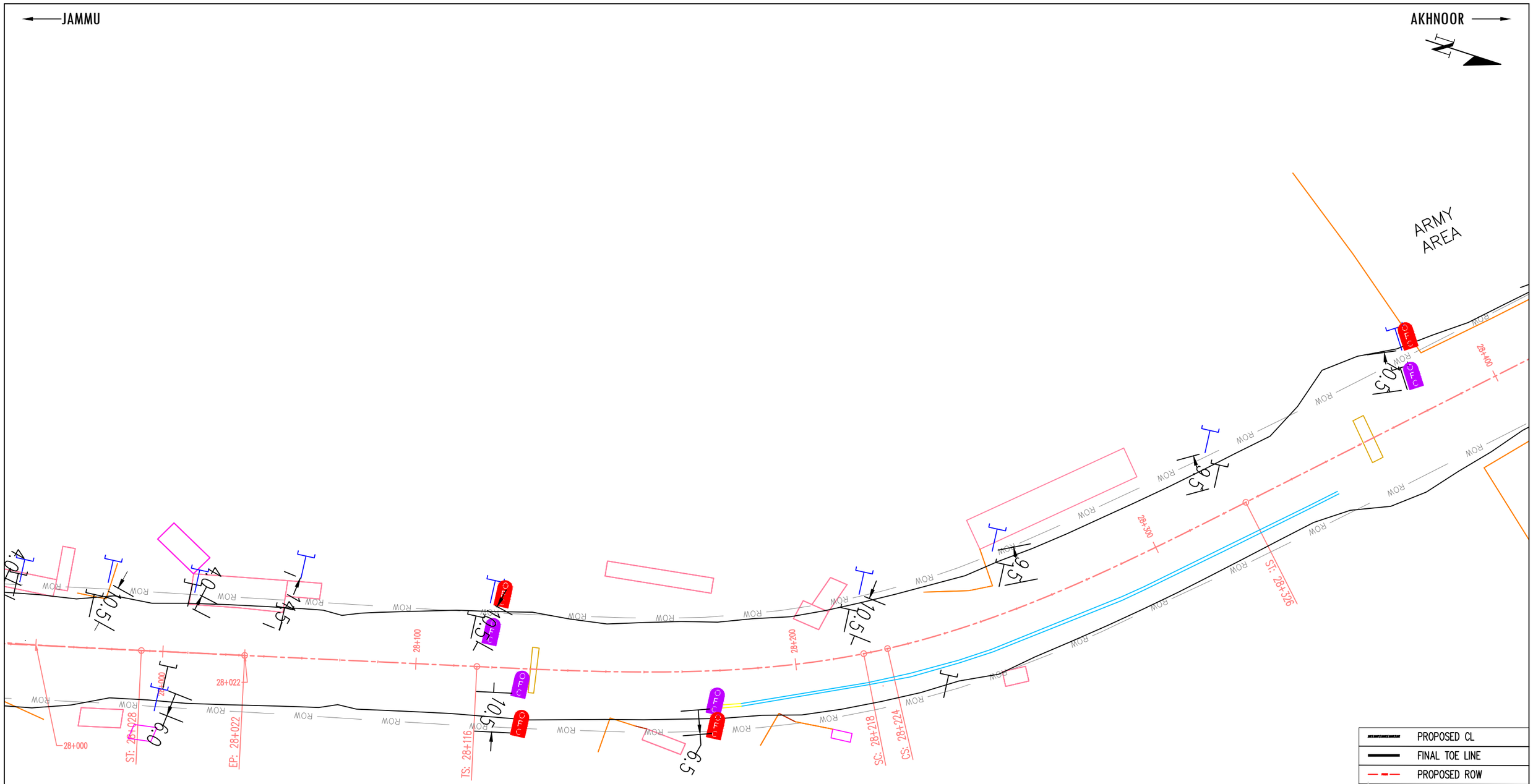

	PROPOSED CL
	FINAL TOE LINE
	PROPOSED ROW
	EXISTING ROAD
	EXISTING CL
	EXISTING ROW
	EXISTING TELEPHONE POLE
	PROPOSED TELEPHONEPOLE
	EXISTING OFC
	PROPOSED OFC
	EXISTING ELECTRIC POLE
	PROPOSED ELECTRIC POLE

REV.	DATE	REVISIONS
02	09/09/2020	AL UPDATE MBR
01	11/06/2020	AL UPDATE END

CLIENT:
NATIONAL HIGHWAYS & INFRASTRUCTURE DEVELOPMENT CORPORATION LTD.
PTI BUILDING, 4 PARLIAMENT STREET
SANSAD MARG AREA, NEW DELHI - 110001

DESIGN CONSULTANT:
ANANDJIWALA INFRA ADVISORY
9, Shivranjani Shopping Center, On 132 Feet Ring Road
Nr. Shivranjani Cross Road, Satellite, Ahmedabad - 380 015
Email: anandjiwalainfra@gmail.com

PROJECT:
CONSULTANCY SERVICES FOR FEASIBILITY STUDY, PREPARATION OF DETAILED PROJECT REPORT AND PROVIDING PRE-CONSTRUCTION SERVICES FOR UPGRADATION OF EXISTING 2 LANE HIGHWAY TO 4 LANE WITH PAVED SHOULDER CONFIGURATION (NH-144A) FROM KM 26.350 (KHATI CHOWK) TO KM 30.097 (HANUMAN CHOWK) OF JAMMU - AKHNOOR SECTION IN THE UNION TERRITORY OF JAMMU & KASHMIR ON EPC BASIS

SCALE AT A3 SIZE DRAWING
HORIZ.1:1000
8 0 8 16 24 32 40

TITLE:
UTILITY PLAN
Km 28+000 to Km- 28+400

CLIENT APPROVAL: | SIGNATURE:

DWG NO:- ICS/JA/NHIDCL/FS/P&P/1

DRAWN:	CHECKED:	DESIGNED:	APPROVED:
LK	SJ	SC	LA

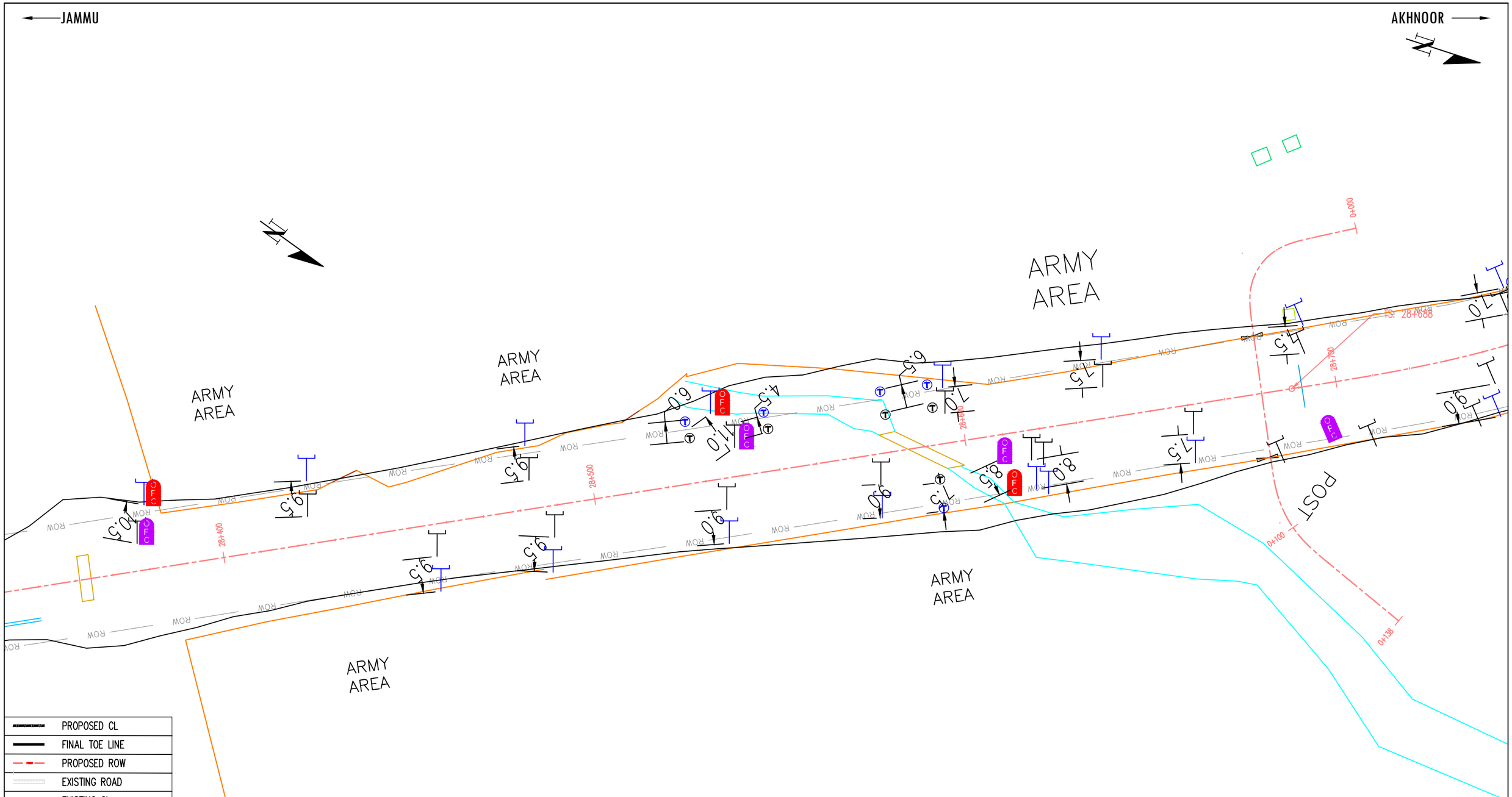

	PROPOSED CL
	FINAL TOE LINE
	PROPOSED ROW
	EXISTING ROAD
	EXISTING CL
	EXISTING ROW
	EXISTING TELEPHONE POLE
	PROPOSED TELEPHONEPOLE
	EXISTING OFC
	PROPOSED OFC
	EXISTING ELECTRIC POLE
	PROPOSED ELECTRIC POLE

REV.	DATE	REVISIONS
02	09/09/2020	AL UPDATE MBR
01	11/06/2020	AL UPDATE END

CLIENT:

NATIONAL HIGHWAYS & INFRASTRUCTURE DEVELOPMENT CORPORATION LTD.
PTI BUILDING, 4 PARLIAMENT STREET
SANSAD MARG AREA, NEW DELHI - 110001

DESIGN CONSULTANT:

ANANDJIWALA INFRA ADVISORY
9, Shivranjani Shopping Center, On 132 Feet Ring Road
Nr. Shivranjani Cross Road, Satellite, Ahmedabad - 380 015
Email: anandjiwalainfra@gmail.com

PROJECT:

CONSULTANCY SERVICES FOR FEASIBILITY STUDY, PREPARATION OF DETAILED PROJECT REPORT AND PROVIDING PRE-CONSTRUCTION SERVICES FOR UPGRADATION OF EXISTING 2 LANE HIGHWAY TO 4 LANE WITH PAVED SHOULDER CONFIGURATION (NH-144A) FROM KM 26.350 (KHATI CHOWK) TO KM 30.097 (HANUMAN CHOWK) OF JAMMU - AKHNOOR SECTION IN THE UNION TERRITORY OF JAMMU & KASHMIR ON EPC BASIS

SCALE AT A3 SIZE DRAWING
HORIZ.1:1000
8 0 8 16 24 32 40

TITLE:

UTILITY PLAN

Km 28+400 to Km- 28+700

CLIENT APPROVAL: | SIGNATURE:

DWG NO:- ICS/JA/NHIDCL/FS/P&P/1

DRAWN:	CHECKED:	DESIGNED:	APPROVED:
LK	SJ	SC	LA

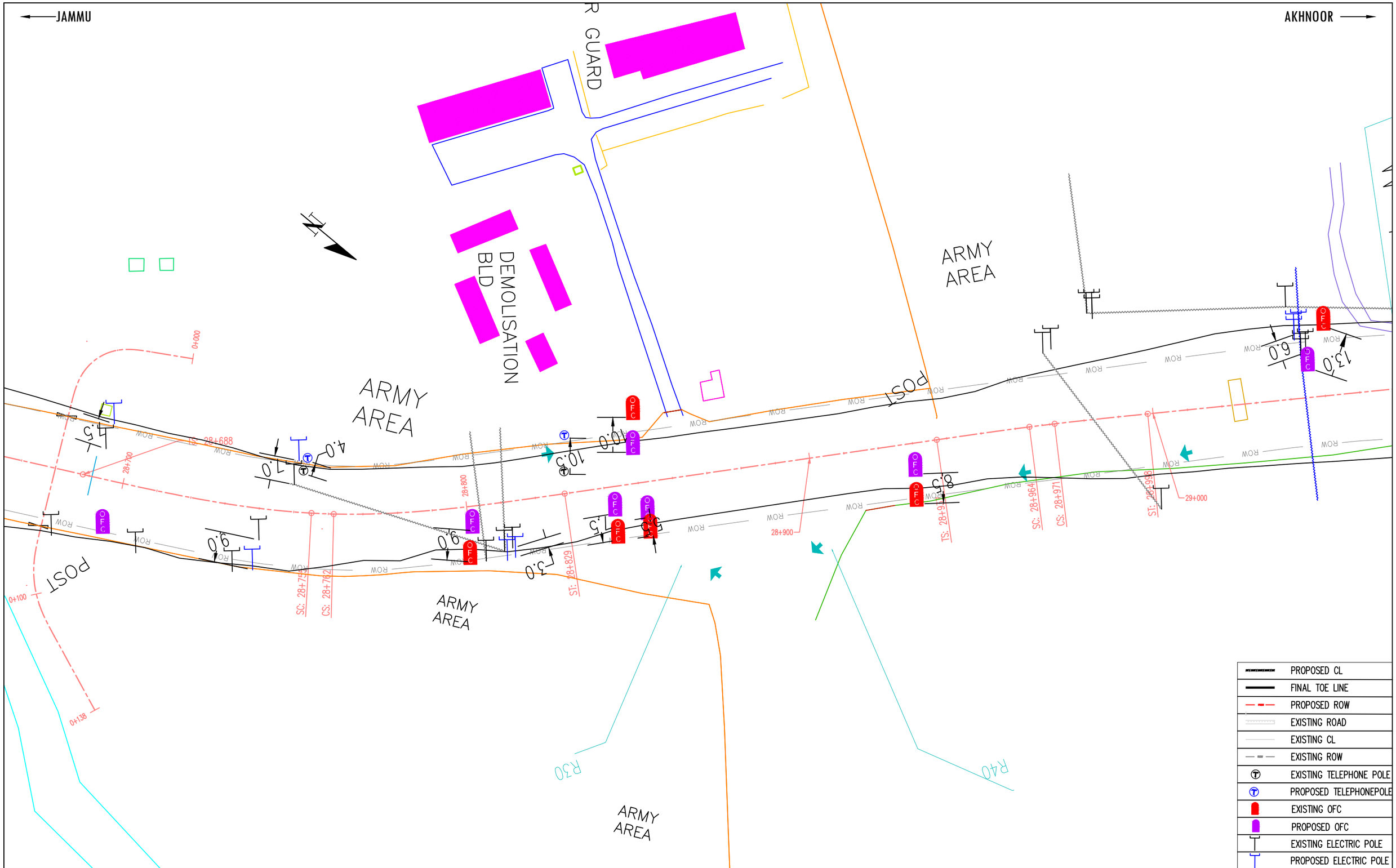

REV.	DATE	REVISIONS
02	09/09/2020	AL UPDATE MBR
01	11/06/2020	AL UPDATE END

CLIENT:

NATIONAL HIGHWAYS & INFRASTRUCTURE DEVELOPMENT CORPORATION LTD.
PTI BUILDING, 4 PARLIAMENT STREET
SANSAD MARG AREA, NEW DELHI - 110001

DESIGN CONSULTANT:

ANANDJIWALA INFRA ADVISORY
9, Shivranjani Shopping Center, On 132 Feet Ring Road
Nr. Shivranjani Cross Road, Satellite, Ahmedabad - 380 015
Email: anandjiwalainfra@gmail.com

PROJECT:

CONSULTANCY SERVICES FOR FEASIBILITY STUDY, PREPARATION OF DETAILED PROJECT REPORT AND PROVIDING PRE-CONSTRUCTION SERVICES FOR UPGRADATION OF EXISTING 2 LANE HIGHWAY TO 4 LANE WITH PAVED SHOULDER CONFIGURATION (NH-144A) FROM KM 26.350 (KHATI CHOWK) TO KM 30.097 (HANUMAN CHOWK) OF JAMMU - AKHNOOR SECTION IN THE UNION TERRITORY OF JAMMU & KASHMIR ON EPC BASIS

SCALE AT A3 SIZE DRAWING
HORIZ.1:1000
8 0 8 16 24 32 40

TITLE:

UTILITY PLAN

Km 28+700 to Km- 29+100

CLIENT APPROVAL: | SIGNATURE:

DWG NO:- ICS/JA/NHIDCL/FS/P&P/1

DRAWN:	CHECKED:	DESIGNED:	APPROVED:
LK	SJ	SC	LA

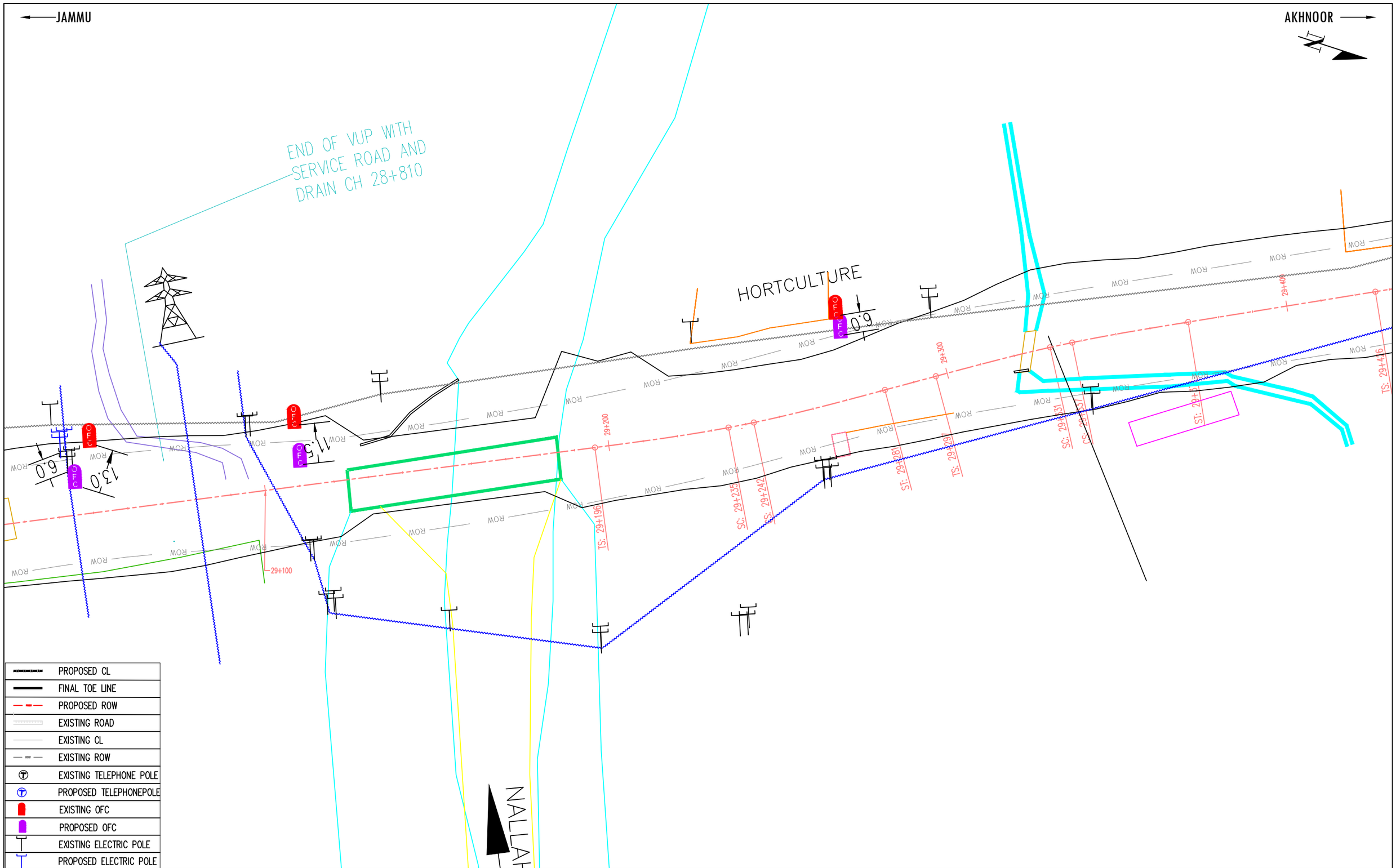

REV.	DATE	REVISIONS
02	09/09/2020	AL UPDATE MBR
01	11/06/2020	AL UPDATE END

CLIENT:
NATIONAL HIGHWAYS & INFRASTRUCTURE DEVELOPMENT CORPORATION LTD.
PTI BUILDING, 4 PARLIAMENT STREET
SANSAD MARG AREA, NEW DELHI - 110001

DESIGN CONSULTANT:
ANANDJIWALA INFRA ADVISORY
9, Shivranjani Shopping Center, On 132 Feet Ring Road
Nr. Shivranjani Cross Road, Satellite, Ahmedabad - 380 015
Email: anandjiwalainfra@gmail.com

PROJECT:
CONSULTANCY SERVICES FOR FEASIBILITY STUDY, PREPARATION OF DETAILED PROJECT REPORT AND PROVIDING PRE-CONSTRUCTION SERVICES FOR UPGRADATION OF EXISTING 2 LANE HIGHWAY TO 4 LANE WITH PAVED SHOULDER CONFIGURATION (NH-144A) FROM KM 26.350 (KHATI CHOWK) TO KM 30.097 (HANUMAN CHOWK) OF JAMMU - AKHNOOR SECTION IN THE UNION TERRITORY OF JAMMU & KASHMIR ON EPC BASIS

SCALE AT A3 SIZE DRAWING
HORIZ.1:1000
8 0 8 16 24 32 40

TITLE:
UTILITY PLAN
Km 29+100 to Km- 29+400

CLIENT APPROVAL:
SIGNATURE:

DWG NO:- ICS/JA/NHIDCL/FS/P&P/1

DRAWN:	CHECKED:	DESIGNED:	APPROVED:
LK	SJ	SC	LA

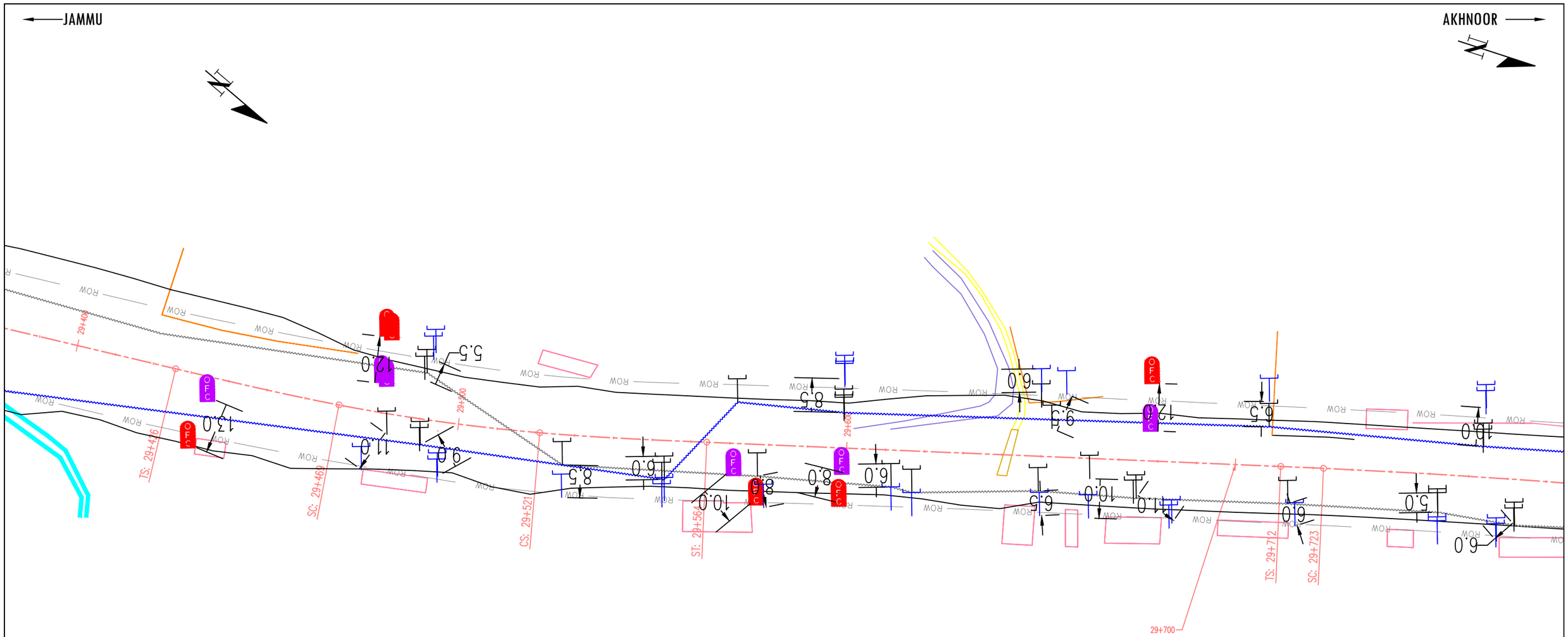

	PROPOSED CL
	FINAL TOE LINE
	PROPOSED ROW
	EXISTING ROAD
	EXISTING CL
	EXISTING ROW
	EXISTING TELEPHONE POLE
	PROPOSED TELEPHONEPOLE
	EXISTING OFC
	PROPOSED OFC
	EXISTING ELECTRIC POLE
	PROPOSED ELECTRIC POLE

REV.	DATE	REVISIONS
02	09/09/2020	AL UPDATE MBR
01	11/06/2020	AL UPDATE END

CLIENT:

NATIONAL HIGHWAYS & INFRASTRUCTURE DEVELOPMENT CORPORATION LTD.
PTI BUILDING, 4 PARLIAMENT STREET
SANSAD MARG AREA, NEW DELHI - 110001

DESIGN CONSULTANT:

ANANDJIWALA INFRA ADVISORY
9, Shivranjani Shopping Center, On 132 Feet Ring Road
Nr. Shivranjani Cross Road, Satellite, Ahmedabad - 380 015
Email: anandjiwalainfra@gmail.com

PROJECT:

CONSULTANCY SERVICES FOR FEASIBILITY STUDY, PREPARATION OF DETAILED PROJECT REPORT AND PROVIDING PRE-CONSTRUCTION SERVICES FOR UPGRADATION OF EXISTING 2 LANE HIGHWAY TO 4 LANE WITH PAVED SHOULDER CONFIGURATION (NH-144A) FROM KM 26.350 (KHATI CHOWK) TO KM 30.097 (HANUMAN CHOWK) OF JAMMU - AKHNOOR SECTION IN THE UNION TERRITORY OF JAMMU & KASHMIR ON EPC BASIS

SCALE AT A3 SIZE DRAWING
HORIZ.1:1000
8 0 8 16 24 32 40

TITLE:

UTILITY PLAN

Km 29+400 to Km- 29+700

CLIENT APPROVAL: | SIGNATURE:

DWG NO:- ICS/JA/NHIDCL/FS/P&P/1

DRAWN:	CHECKED:	DESIGNED:	APPROVED:
LK	SJ	SC	LA

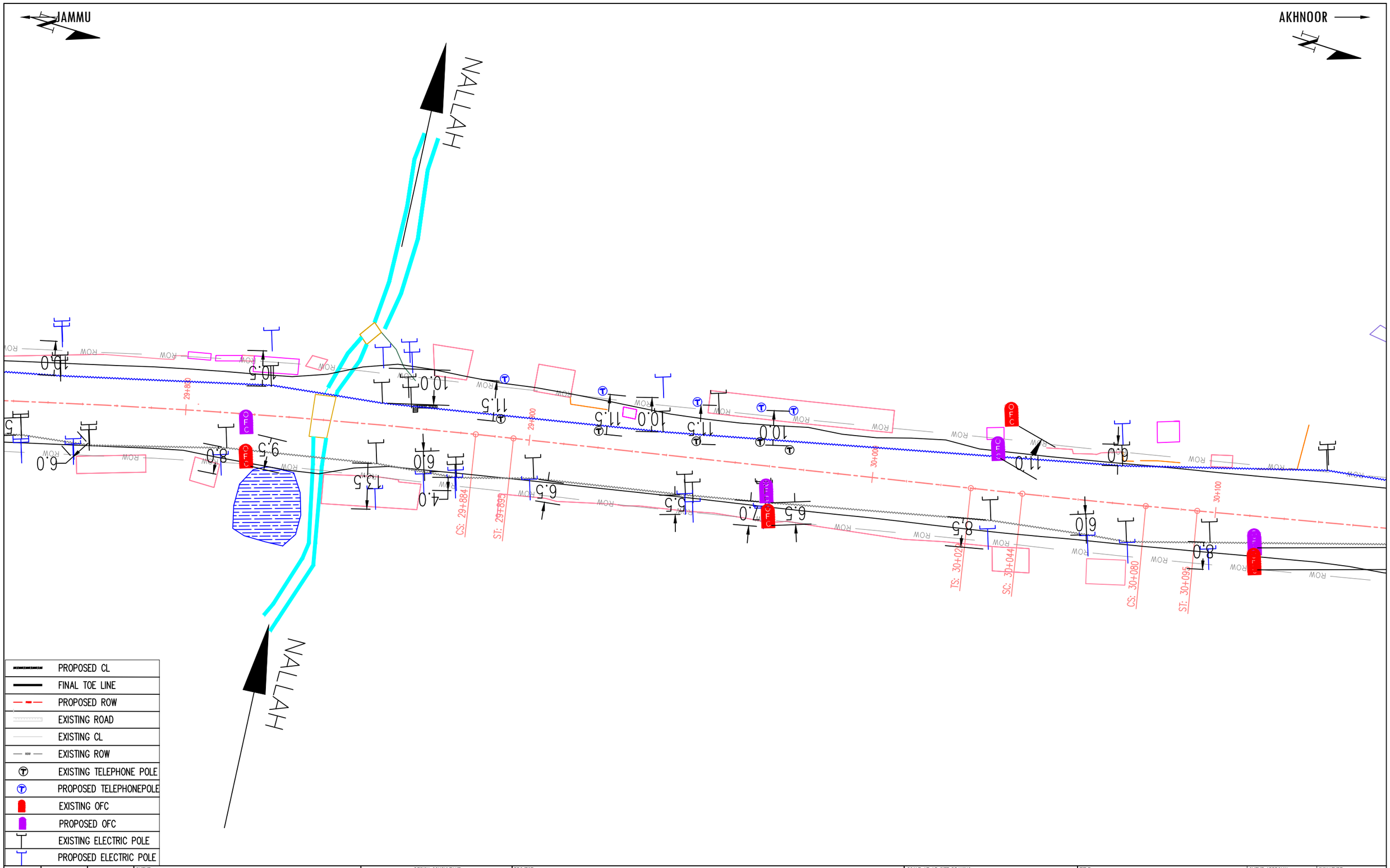

REV.	DATE	REVISIONS
02	09/09/2020	AL UPDATE MBR
01	11/06/2020	AL UPDATE END

CLIENT:
NATIONAL HIGHWAYS & INFRASTRUCTURE DEVELOPMENT CORPORATION LTD.
PTI BUILDING, 4 PARLIAMENT STREET
SANSAD MARG AREA, NEW DELHI - 110001

DESIGN CONSULTANT:
ANANDJIWALA INFRA ADVISORY
9, Shivranjani Shopping Center, On 132 Feet Ring Road
Nr. Shivranjani Cross Road, Satellite, Ahmedabad - 380 015
Email: anandjiwalainfra@gmail.com

PROJECT:
CONSULTANCY SERVICES FOR FEASIBILITY STUDY, PREPARATION OF DETAILED PROJECT REPORT AND PROVIDING PRE-CONSTRUCTION SERVICES FOR UPGRADATION OF EXISTING 2 LANE HIGHWAY TO 4 LANE WITH PAVED SHOULDER CONFIGURATION (NH-144A) FROM KM 26.350 (KHATI CHOWK) TO KM 30.097 (HANUMAN CHOWK) OF JAMMU - AKHNOOR SECTION IN THE UNION TERRITORY OF JAMMU & KASHMIR ON EPC BASIS

SCALE AT A3 SIZE DRAWING
HORIZ.1:1000
8 0 8 16 24 32 40

TITLE:
UTILITY PLAN
Km 29+700 to Km- 30+100

CLIENT APPROVAL:
SIGNATURE:

DWG NO:- ICS/JA/NHIDCL/FS/P&P/1

DRAWN:	CHECKED:	DESIGNED:	APPROVED:
LK	SJ	SC	LA

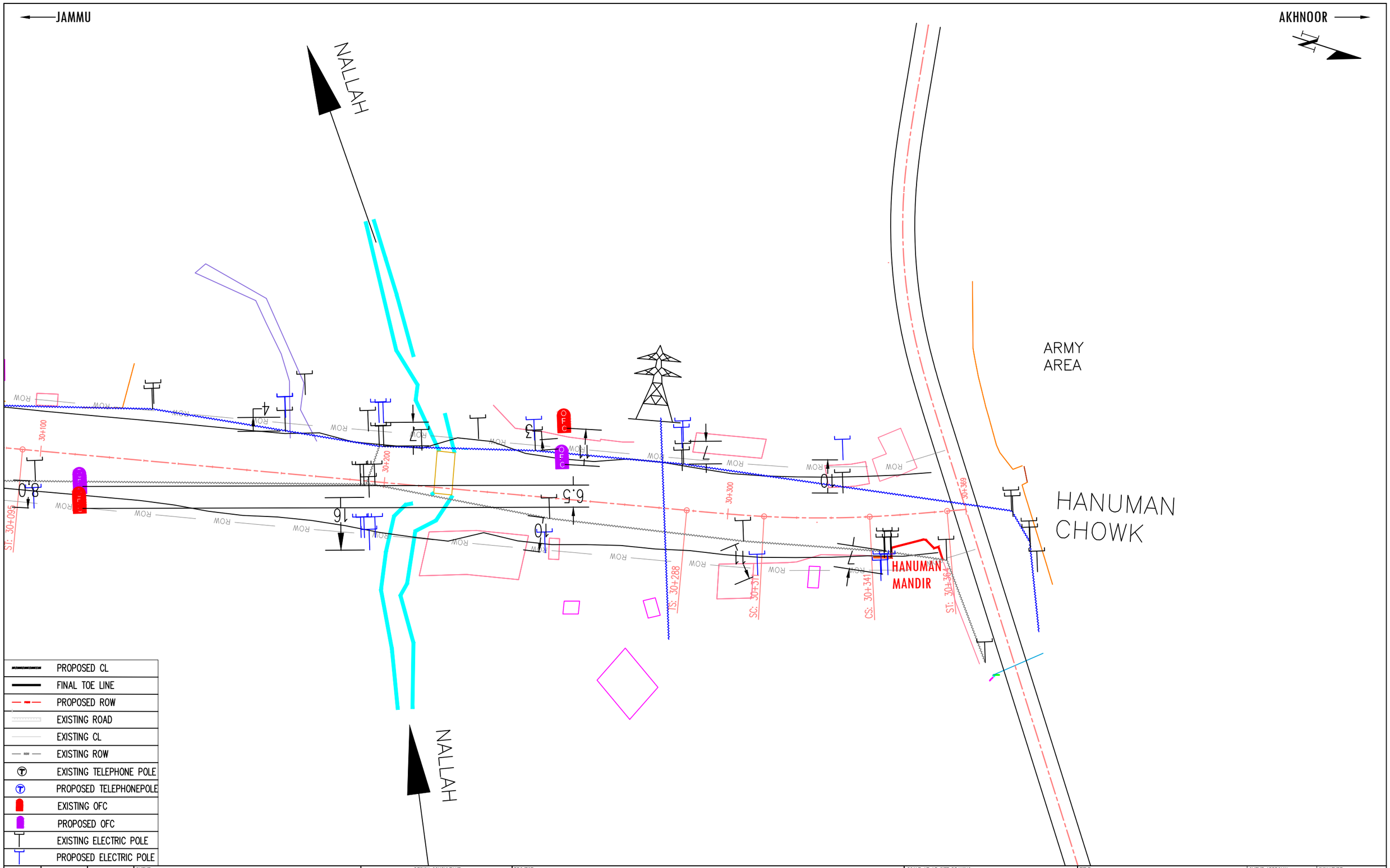

REV.	DATE	REVISIONS
02	09/09/2020	AL UPDATE MBR
01	11/06/2020	AL UPDATE END

CLIENT:
NATIONAL HIGHWAYS & INFRASTRUCTURE DEVELOPMENT CORPORATION LTD.
PTI BUILDING, 4 PARLIAMENT STREET
SANSAD MARG AREA, NEW DELHI - 110001

DESIGN CONSULTANT:
ANANDJIWALA INFRA ADVISORY
9, Shivranjani Shopping Center, On 132 Feet Ring Road
Nr. Shivranjani Cross Road, Satellite, Ahmedabad - 380 015
Email: anandjiwalainfra@gmail.com

PROJECT:
CONSULTANCY SERVICES FOR FEASIBILITY STUDY, PREPARATION OF DETAILED PROJECT REPORT AND PROVIDING PRE-CONSTRUCTION SERVICES FOR UPGRADATION OF EXISTING 2 LANE HIGHWAY TO 4 LANE WITH PAVED SHOULDER CONFIGURATION (NH-144A) FROM KM 26.350 (KHATI CHOWK) TO KM 30.097 (HANUMAN CHOWK) OF JAMMU - AKHNOOR SECTION IN THE UNION TERRITORY OF JAMMU & KASHMIR ON EPC BASIS

SCALE AT A3 SIZE DRAWING
HORIZ.1:1000
8 0 8 16 24 32 40

TITLE:
UTILITY PLAN
Km 30+100 to Km- 30+369

CLIENT APPROVAL:
SIGNATURE:

DWG NO:- ICS/JA/NHIDCL/FS/P&P/1

DRAWN:	CHECKED:	DESIGNED:	APPROVED:
LK	SJ	SC	LA